OPB9001

REFLECTIVE OBJECT SENSOR

September 2019

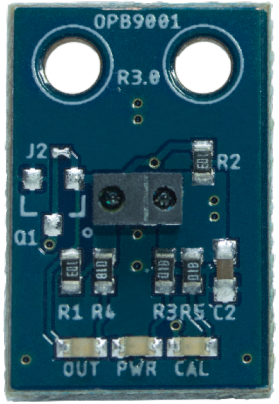

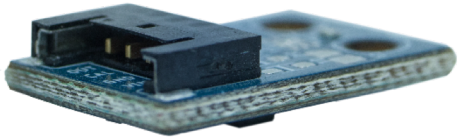

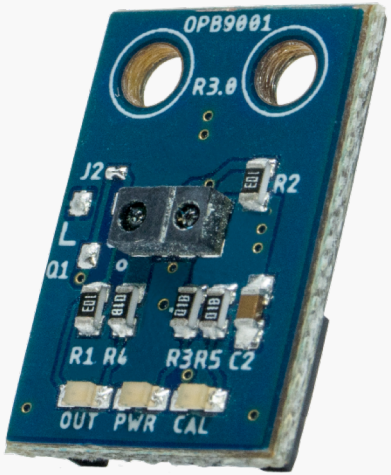

OPB9001

The OPB9001 PCB modules includes the versatile OPB9000 reflective sensor and eliminates the need for peripheral circuitry like voltage regulators, resistors and capacitors.

The OPB9001 series reflective sensor detects objects as far away as 50 mm using standard 90% reflective material, and can detect objects as small as 2.5 mm, depending on the object distance.

Features

- 4.5 V – 30 V input voltage compatibility
- Detecting distance 2.5 mm to 50 mm
- Ambient light rejection
- Programmable output configuration and sensitivity level
- Integrated 4-pin connector
- Wide operating supply voltage range
- -40°C to 85°C operating temperature range
- Small dimensions L 18 mm X W 12 mm X H 5 mm

Applications

- Non-contact position presence applications
- Industrial printing and high-speed paper detection
- Manufacturing and automation
- Automated sewing machines
- Automated banking machines
- Portable medical equipment
- Automatic dispensing
- Factory automation
- Medial diagnostic equipment
- Material handling and asset tracking

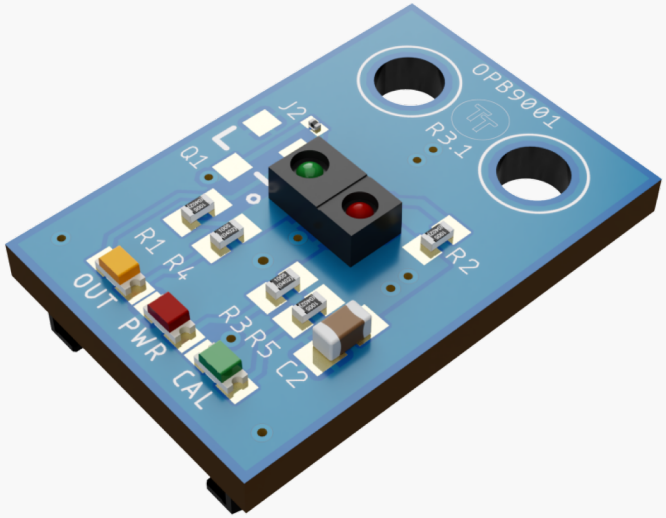

The OPB9001 PCB module takes the versatile and programmable OPB9000 reflective sensor and enhances its capabilities by integrating multiple features into a robust, small form factor for ease of use.

- Accepts a wide range of supply voltages from 3.3V to 30V
- Built-in voltage protection for maximum flexibility
- Includes LED indicators provide overall status during power-on, output and calibration

Turn key solution:

- Transient Voltage Suppressor (TVS) diode to protect against harmful voltage spikes
- CE and UL certified for maximum reliability
- Capable of withstanding up to 8kV of contact discharge HBM
- Design for portability and remote sensing
- Factory calibrated but it can be recalibrated with OPB9000-KIT

Several models to address unique applications:

Part Number	Vout	VCC Range	Features
OPB9001AC	N.O. NPN	4.5 V to 30 V	OPB9000 with indicators, voltage regulator + NPN Transistor 30 V +ESD TVS diodes and CE and UL Certifications and connector
OPB9001A	N.O. NPN	4.5 V to 30 V	OPB9000 with indicators, voltage regulator + NPN Transistor 30 V and connector
OPB9001B	N.O. NPN	4.5 V to 24 V	OPB9000 with indicators, voltage regulator + NPN Transistor 24 V and connector
OPB9001C	TTL CMOS	3.3 V to 5.5 V	OPB9000 with indicators and connector
OPB90014CB	N/A	N/A	1m interface cable with connector
OPB9000-KIT	N/A	N/A	OPB9000 reflective sensor evaluation kit for testing and auto-calibration

Easy operation: recommended schematic circuit

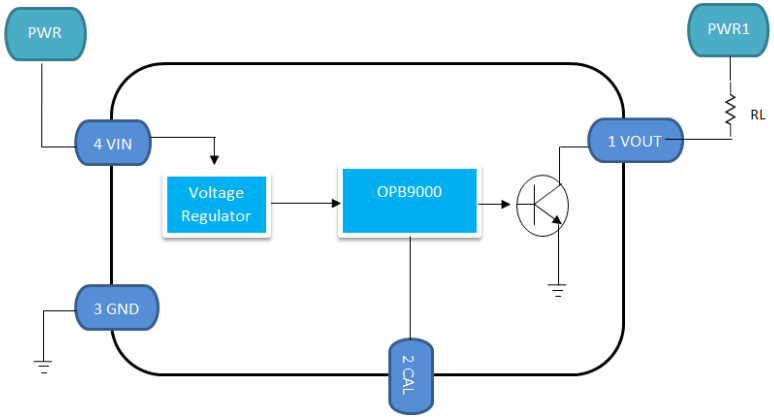

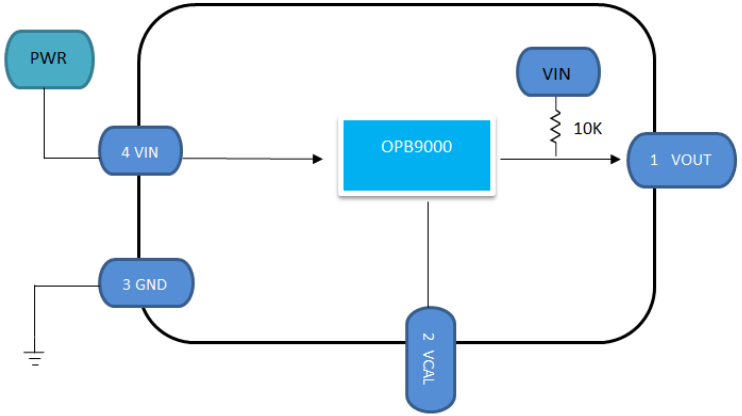

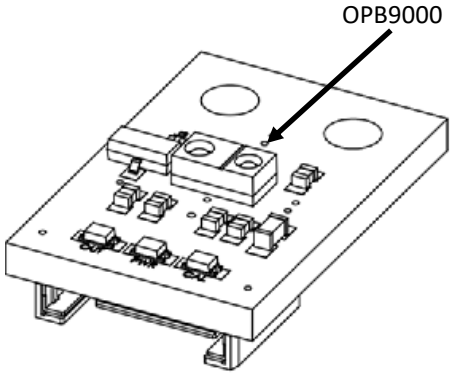

Pin #	Name	Description
1	VOUT	Logic Output, also used as a digital output to read register bits
2	CAL	Calibrate input/status output (to verify successful calibration)
3	GND	Ground Connection
4	VIN	Positive supply power input

Note 1: For additional information on how to program OPB9000, see the datasheet:
https://www.ttelectronics.com/TTElectronics/media/ProductFiles/Optoelectronics/Datasheets/OPB9000.pdf

Our Competitive Advantage

- CE/UL Standard Compliant
- Wide operating voltage up to 30 V
- Operating temperature up to 85°C
- Up to 25K lux ambient light rejection
- Competitive price point

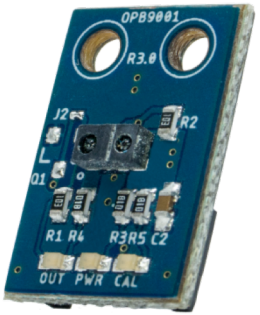

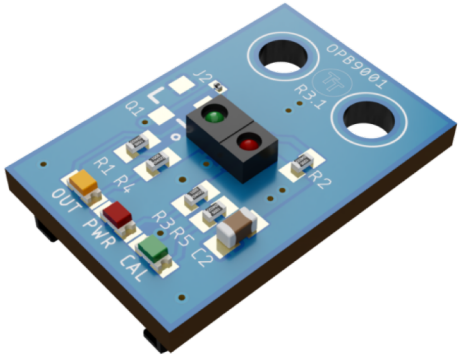

Competitor Comparison

	Optek	Panasonic	Omron	Omron	Omron	P+F	P+F	Keyence	Fotek
Series	OPB9001 A/AC/B/C	EX-14A, EX-14B	E2S-Q23	E3S-DS30E4	TL-W20ME1	ML100-8-H-350-RT/95/103	ML100-8-H-100/115/127/162	PZ-G102CN	K2R-10N
Dimensions	L18 X W12	L21.5 x W13 x T3.5 mm	L26 x W8.9 x T8.4 mm	L67 x W20 x T20.4 mm	L53 x W40 x T23 mm	L34.2 x W20 x T11 mm	L31 x W20 x T11 mm	L31 x W21.8 x T13.1 mm	L33.1 x W21 x T12 mm
LED Indicator (operation/stability)	Incorporated	Incorporated	Incorporated	Incorporated	Incorporated	Incorporated	Incorporated	Incorporated	Incorporated
Output Type	NPN NO	NPN	NPN NO	NPN	NPN NO	PNP	NPN	NPN	NPN
Operating Voltage Range	Ver A/AC/B (4.5 to 30V) Ver C (3.3 to 5V)	12 to 24 V DC±10 %	10 to 30 VDC	12 to 24 V DC ±10 %	10 to 30 VDC	10 to 30 VDC	10 to 30 VDC	10 to 30 VDC	10 to 30 VDC
Current Consumption	16mA max	13 mA max	13 mA max. at 24 VDC (no-load)	40 mA max	15 mA at 24 VDC	No-load supply current: < 20 mA	No-load supply current: < 15 mA	34 mA or less	30mA Max
Ambient operating temperature	-40 to +85°C	−25 to +55 °C	−25 to +70 °C	−25 to +55 °C	−25 to 70°C	−30 to +60 °C	−30 to +60 °C	−20 to +55 °C	−25 to +80 °C
Connector Type / Pins	4-pin Connector	3-Wire	DC 3-Wire	Cable, 3-Wire	DC 3-Wire	4-pin, M8	Cable, 4-Wire	M8 and M12 / 4-pin	Lead wire, 4-pin
Standards Compliance (CE/EN/UL)	OPB9001AC: CE, UL	CE/EN	CE		CE	CE/EN/UL	CE/EN/UL	CE/UL	CE/UL
Sensing Range	2.5 to 50mm	2 to 25 mm	2.5 mm ±15%	300 mm	20 mm ±10%	5 to 350 mm	10 to 100 mm	5 to 45 mm	150 mm
Set distance	Programmable	10 mm	0 to 1.9 mm		0 to 16 mm				
Response frequency	6 µs	0.5 ms or less	1 kHz min	1 ms max	40 Hz min	1 ms	1 ms	500 µs	1 ms
Background suppression sensor (Y/N)	Up to 25k lux	up to 3k lux	n/a	up to 10k lux	n/a	n/a		up to 20k lux	up to 20k lux

Raymund Chua

Global Product Line Director, Optoelectronics

Raymund.Chua@ttelectronics.com

Walter Garcia Brooks

Global Product Line Manager, Optoelectronics

Walter.Brooks@ttelectronics.com