JP034
Wireless Headphones

October 2019

© 2019 Renesas Electronics Corporation. All rights reserved.

BIG IDEAS FOR EVERY SPACE RENESAS

Wireless Headphones

- **Overview**

This design features a wireless headphone with a cradle solution. It includes an ultra-low power 48MHz Arm® Cortex®-M23 MCU in conjunction with a best-in-class, high-efficiency power solution that enables extended battery life.

- **System Benefits**
  - Advanced security, connectivity and flexible software
  - Integrated AFE enables reduction in BOM costs and PCB size by eliminating several analog components
  - Compact for space-limited applications
  - Highly efficient and low quiescent current power solution
  - The P9235A wireless power transmitter features an integrated Arm® Cortex®-M0 processor, which provides a high level of programmability, and empowers users to customize features, such as LED patterns, buzzers and FOD threshold settings

© 2019 Renesas Electronics Corporation. All rights reserved.

BIG IDEAS FOR EVERY SPACE RENESAS

Wireless Headphones

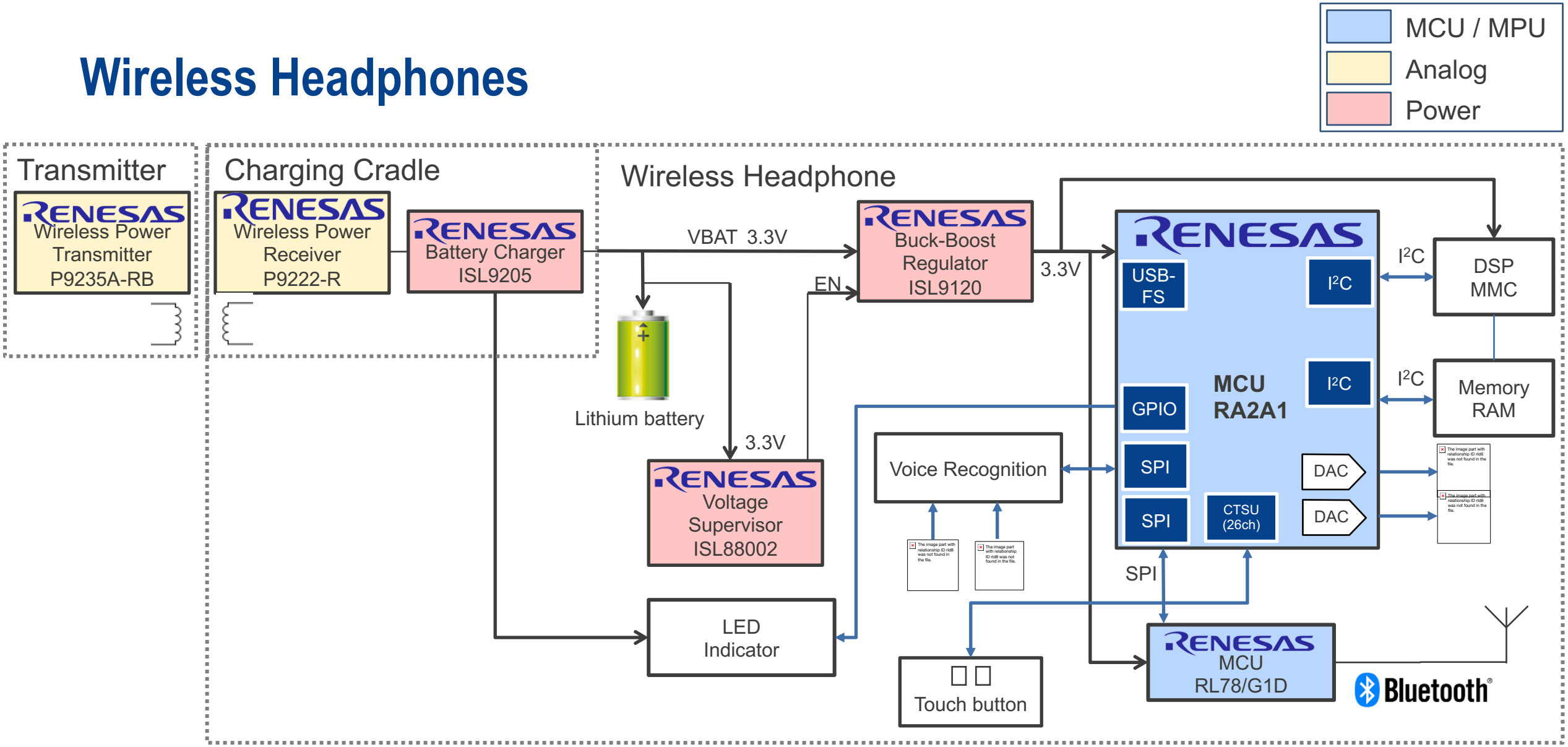

Block Diagram #JP034
October 2019

© 2019 Renesas Electronics Corporation. All rights reserved.

BIG IDEAS FOR EVERY SPACE RENESAS

Wireless Headphones

Device Category	P/N	Key Features
MCU	RA2A1	Arm® Cortex®-M23 256kB Flash with 32kB RAM
	RL78/G1D	Supports BLE and achieves the lowest level of current consumption in the industry at 4.3 mA RF transmission current and 3.5 mA RF receiving current.
Power	ISL9205	Li-ion Battery Charger, Programmable End-of-Charge Current
	ISL9120	Compact High Efficiency Low Power Buck-Boost Regulator
	ISL88002	Ultra Low 160nA Supply Current Voltage Supervisor
Analog	P9235A-RB	Wireless Power Transmitter for 5W Applications
	P9222-R	WPC 1.2.4 Compliant, Wireless Charging Receiver for 5W Applications

© 2019 Renesas Electronics Corporation. All rights reserved.

BIG IDEAS FOR EVERY SPACE RENESAS

RA2A1 – Ultra-Low Power 48-MHz Arm® Cortex®-M23 Core

Complete Analog Solution for Signal Conditioning and Measurement

High Performance
- 48MHz Arm® Cortex®-M23 CPU

Highly Integrated, High-Accuracy Analog Capabilities
- OPAMP x3
- 24-Bit S/D ADC (10 ch.) /16-Bit SAR ADC (17 ch.)
- 12-Bit DAC (1 ch.)/8-Bit DAC (2 ch.)
- Temperature Sensor (TSN)
- High-Speed Comparator x2
- Low-Power Comparator x2

Communication Interfaces
- USB 2.0 (Full Speed)
- CAN
- SCI x3/SPIx2/IICx2

HMI Interface
- Capacitive Touch Sensing Unit (26 ch.)

Wide Voltage and Low Power Consumption
- Wide operating voltage range of 1.6V to 5.5V
- Various Low Power Modes

Part #	Flash Memory	RAM	Temp	Package
R7FA2A1AB3CFJ	256KB	32KB	40～105℃	32 LQFP
R7FA2A1AB3CFM	256KB	32KB	40～105℃	64 LQFP

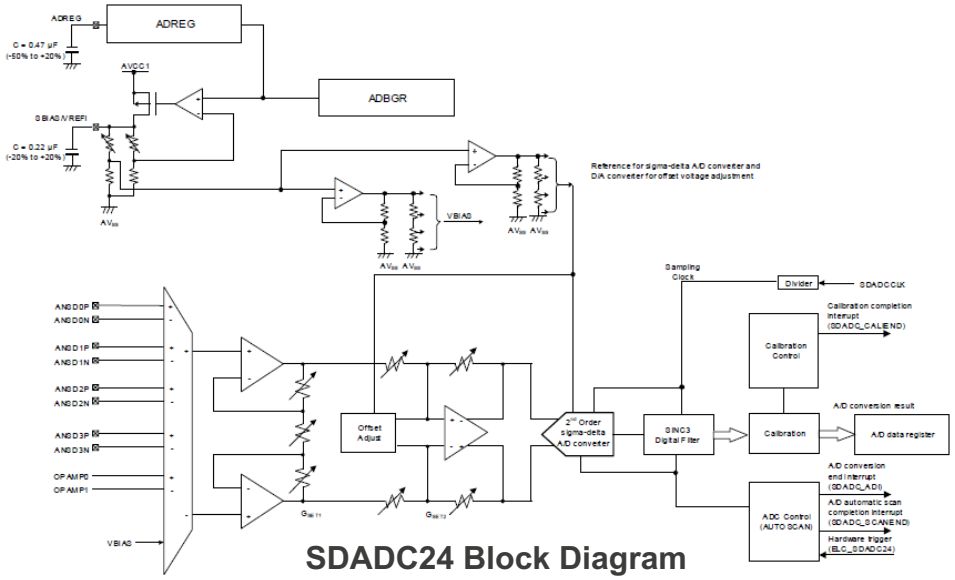

SDADC24 Block Diagram

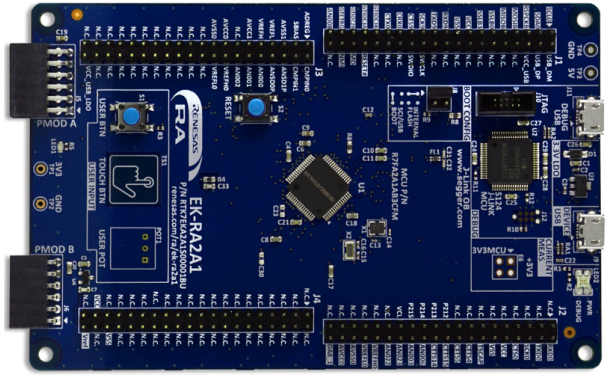

RTK7EKA2A1S00001BU

© 2019 Renesas Electronics Corporation. All rights reserved.

BIG IDEAS FOR EVERY SPACE RENESAS

RL78/G1D – Bluetooth® Low Power MCU

Compact Module with Built-in 32 MHz Crystal Resonator for RF and Antenna

High Integration

- MCU part: incorporating the RL78 CPU core
- RF transceiver part
  . Bluetooth® v4.2 Specification (Low Energy Single mode)
  . 2.4 GHz ISM band, GFSK modulation, TDMA/TDD frequency hopping (including AES)
  . Adaptivity, exclusively for use in operation as a slave device

Easy to Develop and Use

- Only need for few external components (antenna) helps simplify design and quality control
- The best Bluetooth® low energy small size (8.95 × 13.35 × 1.7 mm) module is available
- Software stack supports wireless updating

Low Power Consumption

- Achieves the lowest level of current consumption in the industry (3.0V / MCU part: STOP)
  . RF transmitter active normal mode: 4.3 mA (TYP.), Low power mode:2.6 mA (TYP.)
  . RF receiver active normal mode: 3.5 mA (TYP.), Low power mode:3.3 mA (TYP.)
  . RF sleep operation: 0.3 μA (TYP.), power down mode: 0.1 μA (TYP.)
- Different standby mode for MCU:HALT, STOP, SNOOZE
- Low power saving mode with 6 setting (min. 0.1 μA) for RF part

Part #	Flash ROM	RAM	Package
R5F11AGG	128KB	12KB	48-pin HWQFN (6 × 6) (0.4mm pitch)
R5F11AGH	192KB	16KB	
R5F11AGJ	256KB	20KB	

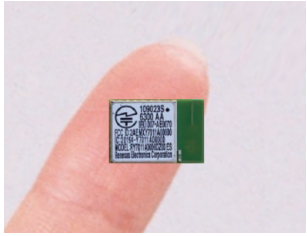

RL78/G1D module (RTK0EN0002C01001BZ) Size: 8.95 × 13.35 × 1.7 mm

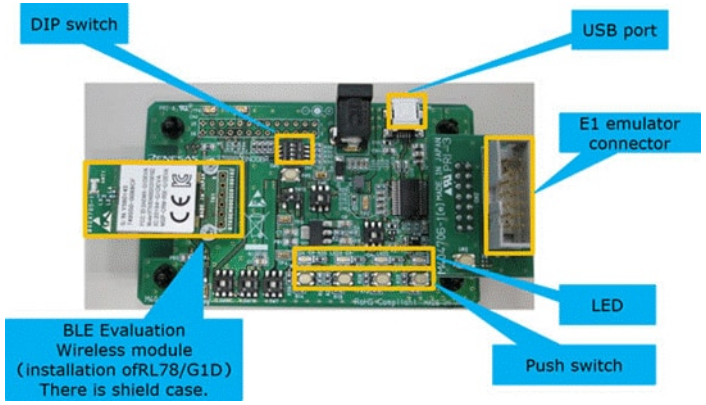

RTK0EN0001D01001BZ RL78/G1D Evaluation Board

© 2019 Renesas Electronics Corporation. All rights reserved.

BIG IDEAS FOR EVERY SPACE RENESAS

ISL9205 – Li-Ion Battery Charger

Complete Charger for Li-Ion / Polymer batteries

Single IC solution for Charging

- Integrated pass element and current sensor
- Charge current from 50mA to 900mA

Multiple Charge Modes

- Adjustable CC & End of Charge current via external resistors
- Ability to operate as pulse charger for current limited inputs
- Trickle charge for fully discharged batteries

Protection Features

- Incorporates Thermaguard to prevent over temperature
- Foldback of charge current during over temperature events
- Ability to monitor temperature of battery pack

Part #	V_{BAT}	Vsen	Temp	Timeout	Package
ISL9205IRZ-T	4.2	Yes	Yes	Yes	16L 3x3 TQFN
ISL9205AIRZ-T	4.2	Yes	No	No	10L 3x3 TQFN
ISL9205BIRZ-T	4.2	Yes	No	Yes	10L 3x3 TQFN
ISL9205CIRZ-T	4.256	Yes	No	Yes	10L 3x3 TQFN
ISL9205DIRZ-T	4.2	No	Yes	Yes	10L 3x3 TQFN

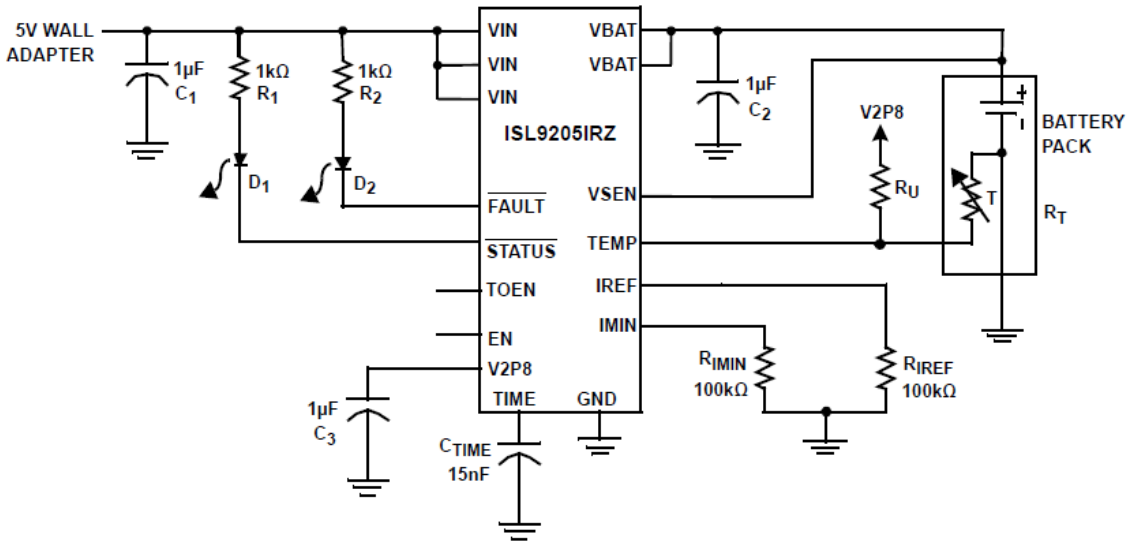

Typical Application Circuit

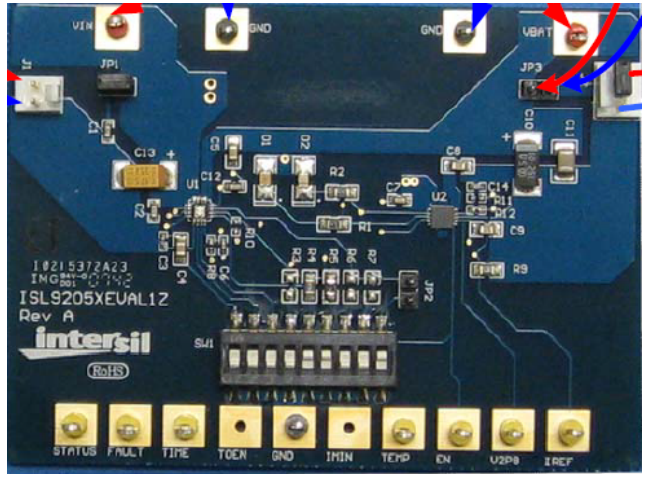

Evaluation Board

© 2019 Renesas Electronics Corporation. All rights reserved.

BIG IDEAS FOR EVERY SPACE RENESAS

ISL9120 – High Efficiency Buck Boost

Integrated Buck-Boost for Single Cell applications

Integrated Buck Boost

- 1.8V to 5.5V Input range
- Output current up to 800mA
- Efficiency up to 98%

Compact Design

- Default output of 3.3V, adjustable via resistors
- Integrated FETs for efficiency and space savings

High Performance

- 41uA quiescent current for light load efficiency
- Seamless transitions between buck/boost modes
- Forced bypass mode, utilizes only 3.5uA Iq
- Adaptive multilevel current limit scheme

Part #	V_{OUT}	Package
ISL9120IRTAZ	ADJ	12L 3x3 TQFN
ISL9120IRTNZ	3.3V	12L 3x3 TQFN

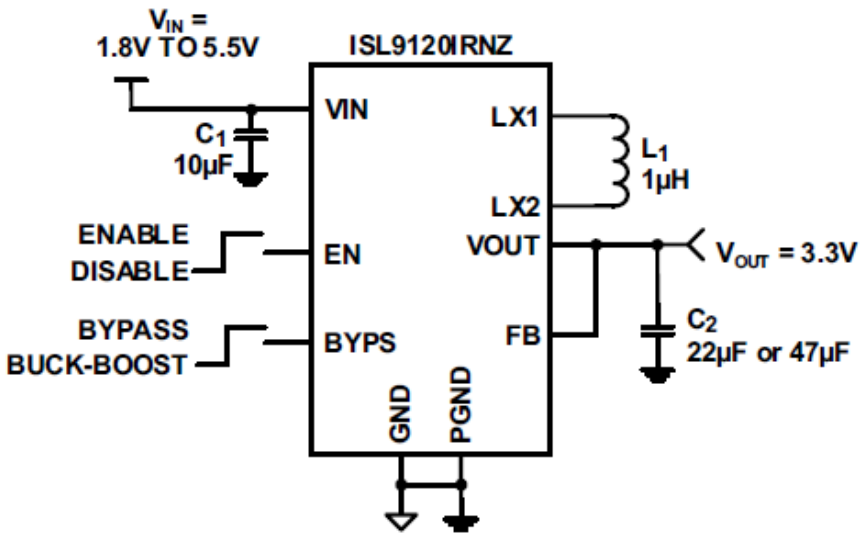

Typical Application Circuit

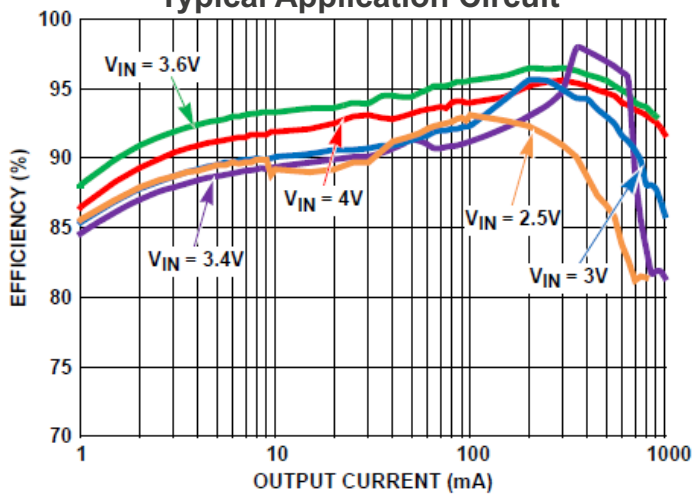

Efficiency with 3.3V Output

© 2019 Renesas Electronics Corporation. All rights reserved.

BIG IDEAS FOR EVERY SPACE RENESAS

ISL88001/2/3 – Ultra Low Power 3Ld Voltage Supervisors

Ultra Small Package for Confined Spaces

Single Voltage Monitoring Supervisor

- Fixed-Voltage Options Allow Precise Monitoring of +1.8V, +2.5V, +3.0V, +3.3V and +5.0V Power Supplies
- Ultra Low 160nA Supply Current
- ±1.2% Voltage Threshold Accuracy

Popular Voltage Trip Points

- Trip points are available for standard power supplies from 1.8V to 5.0V
- 190ms Power-On Reset Timeout
- Reset Signal Valid Down to VDD = 1V

Simple Board Design

- No external components necessary

Part #	Nominal V_{THVDD} (V)	Temp.	Package
ISL88001IH46Z-T7A	4.62	-40/+85	3Ld 2.92x 1.3mm SOT-23
ISL88001IH44Z-T7A	4.38	-40/+85	3Ld 2.92x 1.3mm SOT-23
ISL88001IE46Z-T7A	4.62	-40/+85	3Ld 2 x 1.24mm SC70
ISL88001IE31Z-T7A	3.07	-40/+85	3Ld 2 x 1.24mm SC70

Note: Many other output voltage and package options. See website.

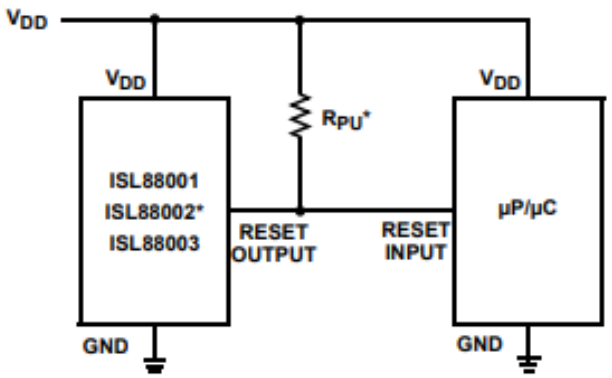

Typical Operating Circuits
(*necessary for ISL88002)

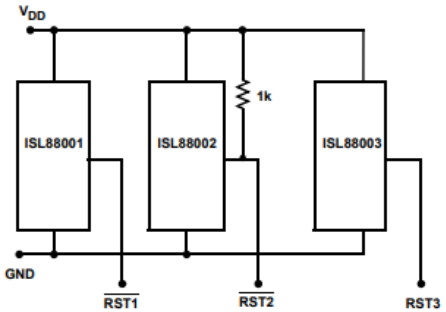

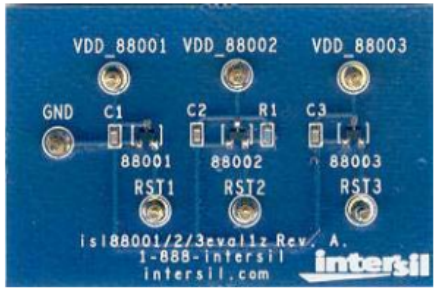

ISL88001/2/3EVAL1Z Evaluation Board

© 2019 Renesas Electronics Corporation. All rights reserved.

BIG IDEAS FOR EVERY SPACE RENESAS

P9235A-RB – Wireless Power Transmitter

Highly Integrated, Wireless Power Transmitter Supporting up to 5W Applications

Integrated Features

- Embedded 32-bit ARM® Cortex®-M0 processor
- Integrated step-down switching regulator and current sense amplifier
- Two LED outputs that can indicate power transfer and fault conditions
- Integrated drivers for external power FETs and foreign object detection (FOD)

Easy and Flexible Use

- Wide input voltage range: 4.25V to 21V
- Simultaneous voltage and current demodulation scheme for robust communication
- Offers a pre-programmed bootloader, the user can change the firmware flexibly in the external flash to meet application-specific requirements

Low Power and Protection Features

- Low standby mode current to 1mA
- Over-current and over-temperature protection

Part #	Shipping package	Temp.(℃)	Package
P9235A-RBNDGI	Tray	-40 to 85	40-QFN(5 x 5mm)
P9235A-RBNDGI8	Reel	-40 to 85	40-QFN(5 x 5mm)

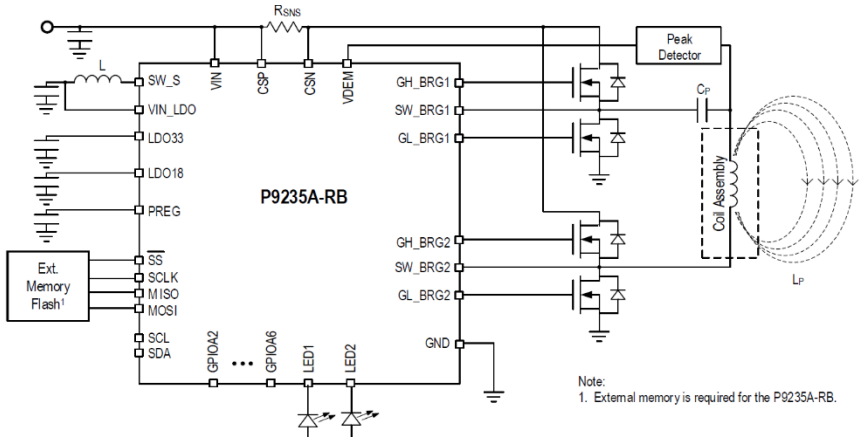

Typical Application Circuit

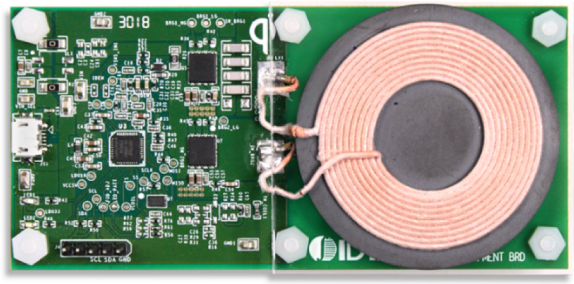

P9235A-RB Evaluation Board

© 2019 Renesas Electronics Corporation. All rights reserved.

BIG IDEAS FOR EVERY SPACE RENESAS

P9222-R – Wireless Power Receiver for Low Power

WPC 1.2.4 Compliant, Wireless Charging Receiver for 5W Applications

High Efficiency

- Ultra-compact, efficient wireless power receiver for up to 5W applications
- Optimized light load efficiency for low power applications
- Ping detection for reduced power consumption at end of charging
- Low under-voltage lockout (UVLO) for low voltage start-up for faster connections over an extended area

Easy and Flexible Use

- Easy configuration of design parameters through I²C interface on an external EEPROM
- Embedded 32-bit ARM® Cortex®-M0 processor
- ADC input to measure battery voltage or system voltage

Low Power and Protection Features

- Low standby and operating mode power consumption
- Internal over-voltage clamping
- High performance low dropout (LDO) regulator with low RDS(on) and programmable current limiting

Part #	MSL Rating	Temp.(℃)	Package
P9222-RAZGI8	MSL-1	-40 to 85	40-WLCSP, 2.28 x 3.38 mm, 0.4mm pitch

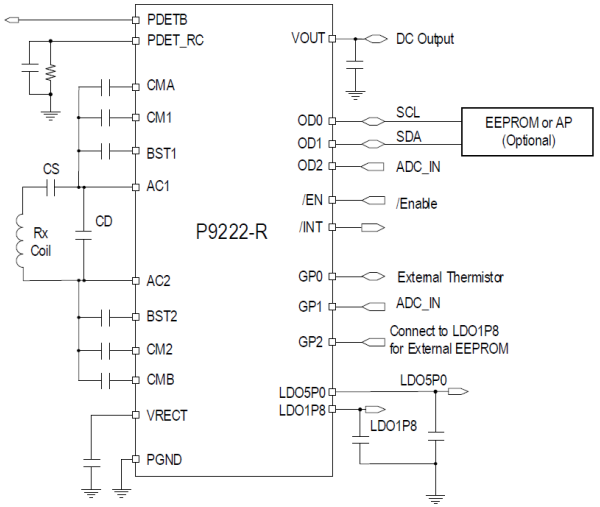

Simplified Block Diagram

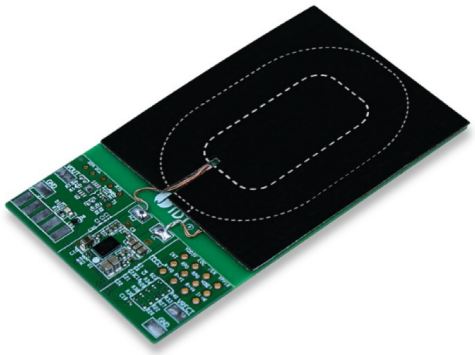

P9225-R Evaluation Board

© 2019 Renesas Electronics Corporation. All rights reserved.

BIG IDEAS FOR EVERY SPACE RENESAS

Renesas.com

© 2019 Renesas Electronics Corporation. All rights reserved.