Product Change Notification / ASER-09RAOP971

Date:

19-Nov-2021

Product Category:

Clock and Timing - Oscillators

PCN Type:

Manufacturing Change

Notification Subject:

CCB 4928 Initial Notice: Qualification of STAR as an additional final test site for selected DSC100xxx device family available in 4L VDFN (3.2x2.5x0.9mm), (2.0x2.5mm) and (3.2x5.0x0.9mm) packages.

Affected CPNs:

ASER-09RAOP971_Affected_CPN_11192021.pdf
ASER-09RAOP971_Affected_CPN_11192021.csv

Notification Text:

PCN Status: Initial Notification

PCN Type: Manufacturing Change

Microchip Parts Affected: Please open one of the files found in the Affected CPNs section.
Note: For your convenience Microchip includes identical files in two formats (.pdf and .xls)

Description of Change: Qualification of STAR as an additional final test site for selected DSC100xxx device family available in 4L VDFN (3.2x2.5x0.9mm), (2.0x2.5mm) and (3.2x5.0x0.9mm) packages.

Pre and Post Change Summary:

	Pre Change	Post Change	
Assembly Site	UTAC Thai	UTAC Thai	Stars Microelectronics

		Limited (NSEB)	Limited (NSEB)	(Thailand) Public Company Limited (STAR)
Base Quantity Multiple (BQM)	Tape and Reel	No Change See Pre and Post Change Summary for Comparison.		
	Tube	No Change See Pre and Post Change Summary for Comparison.		
Pin 1 Orientation	Tape and Reel	Quadrant 1	Quadrant 1	Quadrant 1
	Tube	No Change See Pre and Post Change Summary for Comparison.		
Carrier Tape		See Pre and Post Change Summary for Comparison.		
Cover Tape		See Pre and Post Change Summary for Comparison.		
Plastic Reel		See Pre and Post Change Summary for Comparison.		
Packing Method		See Pre and Post Change Summary for Comparison.		

Impacts to Data Sheet: None

Change Impact None

Reason for Change: To improve on-time delivery performance by qualifying STAR as an additional final test site.

Change Implementation Status: In Progress

Estimated Qualification Completion Date: February 2022

Note: Please be advised the qualification completion times may be extended because of unforeseen business conditions however implementation will not occur until after qualification has completed and a final PCN has been issued. The final PCN will include the qualification report and estimated first ship date. Also note that after the estimated first ship date guided in the final PCN customers may receive pre and post change parts.

Time Table Summary:

	November 2021					**>**	**February 2022**				
Workweek	45	46	47	48	49		6	7	8	9	10

Initial PCN Issue Date			x								
Qual Report Availability							x				
Final PCN Issue Date							x				

Method to Identify Change: Traceability code

Qualification Plan: Please open the attachments included with this PCN labeled as PCN_#_Qual_Plan.

Revision History: November 18, 2021: Issued initial notification.

The change described in this PCN does not alter Microchip's current regulatory compliance regarding the material content of the applicable products.

Attachments:

PCN_ASER-09RAOP971_Qual Plan.pdf
PCN_ASER-09RAOP971_Pre and Post Change Summary 1 of 2.pdf
PCN_ASER-09RAOP971_Pre and Post Change Summary 2 of 2.pdf

Please contact your local Microchip sales office with questions or concerns regarding this notification.

Terms and Conditions:

If you wish to receive Microchip PCNs via email please register for our PCN email service at our PCN home page select register then fill in the required fields. You will find instructions about registering for Microchips PCN email service in the PCN FAQ section.

If you wish to change your PCN profile, including opt out, please go to the PCN home page select login and sign into your myMicrochip account. Select a profile option from the left navigation bar and make the applicable selections.

CCB 4928
Pre and Post Change Summary
2 of 2
PCN #: ASER-09RAOP971

A Leading Provider of Smart, Connected and Secure Embedded Control Solutions

Qualification of STAR as an additional final test site for selected DSC100xxx device family available in 4L VDFN (3.2x2.5x0.9mm), (2.0x2.5mm) and (3.2x5.0x0.9mm) packages.

SMART | CONNECTED | SECURE

Change Summary –H6A Packing TR

Description	NSEB	STAR
Plastic Reel	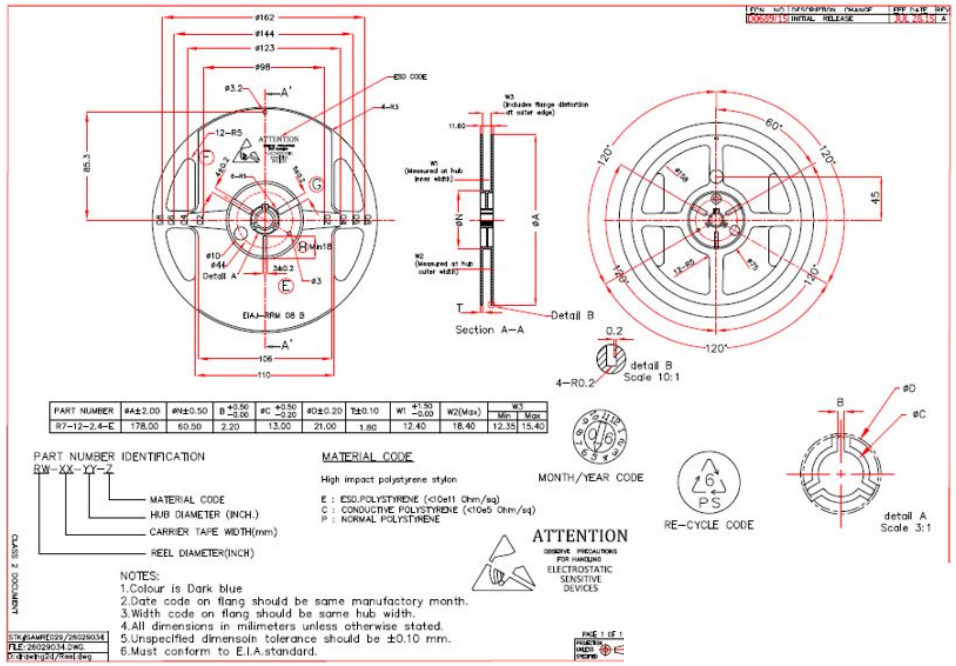	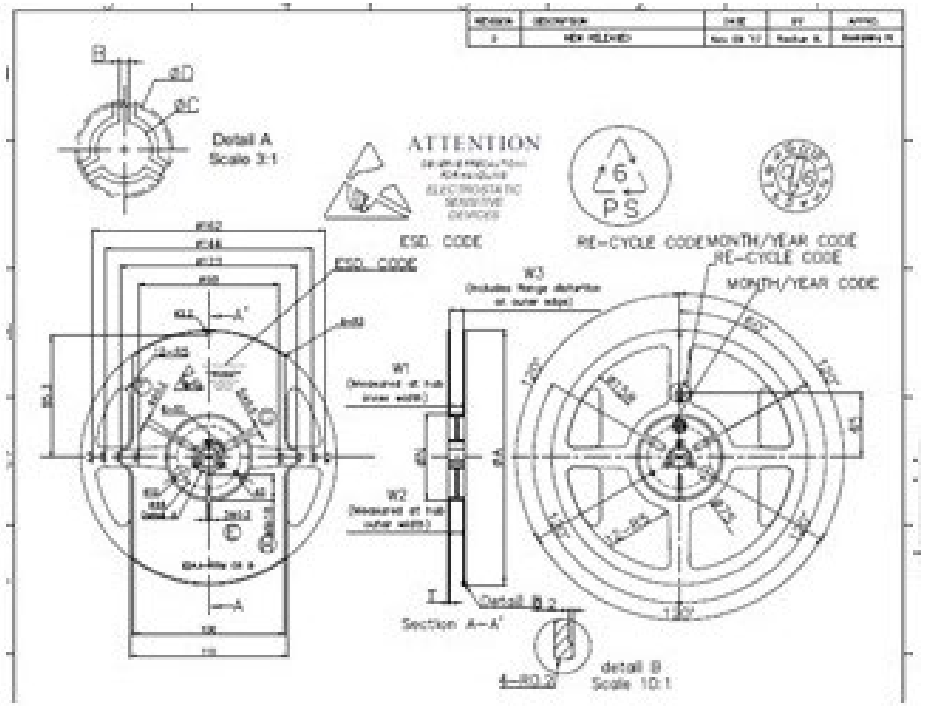

Change Summary –H6A Packing TR

Description	NSEB	STAR
Packing Material/Method	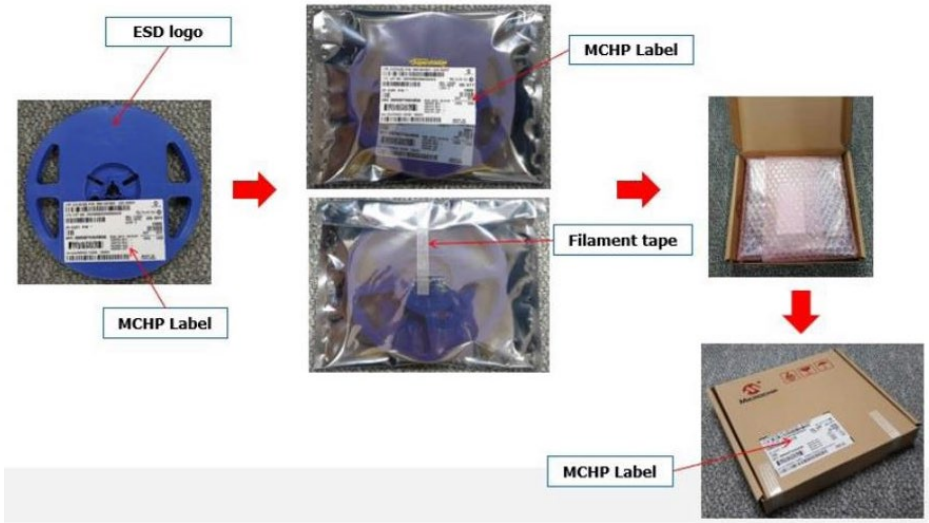	 Remark: MSL Level 1

MICROCHIP

Change Summary –H4A Packing TUBE

Item	Package codes	Package Type	Media	Description	NSEB	STAR	GAP
1	H4A	VDFN COL-4 (3.2x2.5x0.9mm)	TUBE	Pin1 Orientation	Pin one of the units must be oriented towards the beginning of words on tube (eg.ANTISTATIC)	Pin one of the units must be oriented towards the beginning of words on tube (eg.ANTISTATIC)	No
2	H4A	VDFN COL-4 (3.2x2.5x0.9mm)	TUBE	BQM	110	110	No
3	H4A	VDFN COL-4 (3.2x2.5x0.9mm)	TUBE	Tube Color	Clear	Clear	No
5	H4A	VDFN COL-4 (3.2x2.5x0.9mm)	TUBE	PLUG COLOR	Plug pin one : GREY Opposite pin one : BLUE	Plug pin one : GREY Opposite pin one : BLUE	No

MICROCHIP

Change Summary –H4A Packing TUBE

Description	NSEB	STAR
Tube Dimension	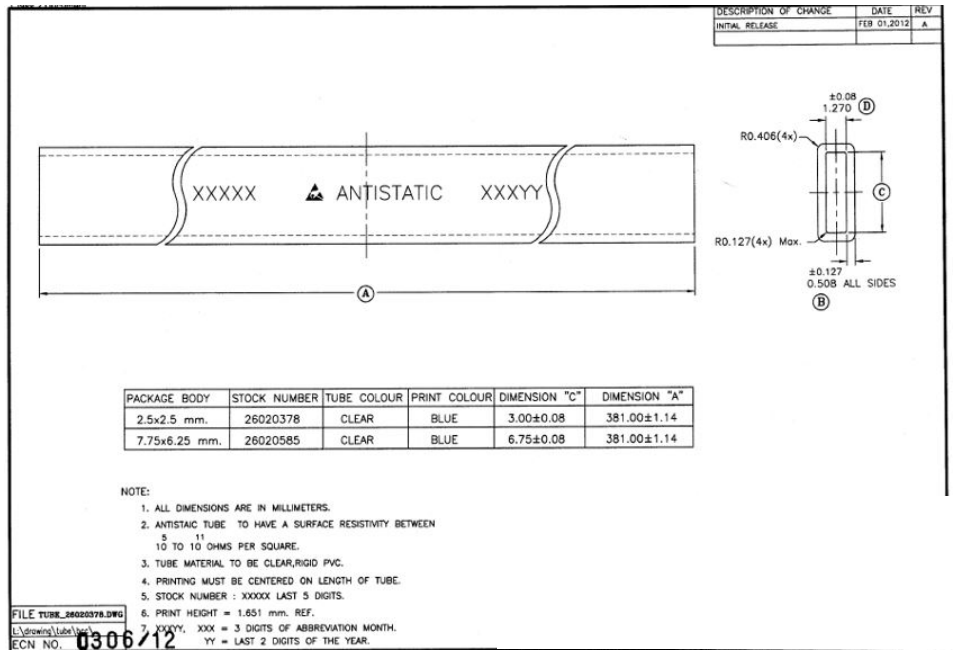	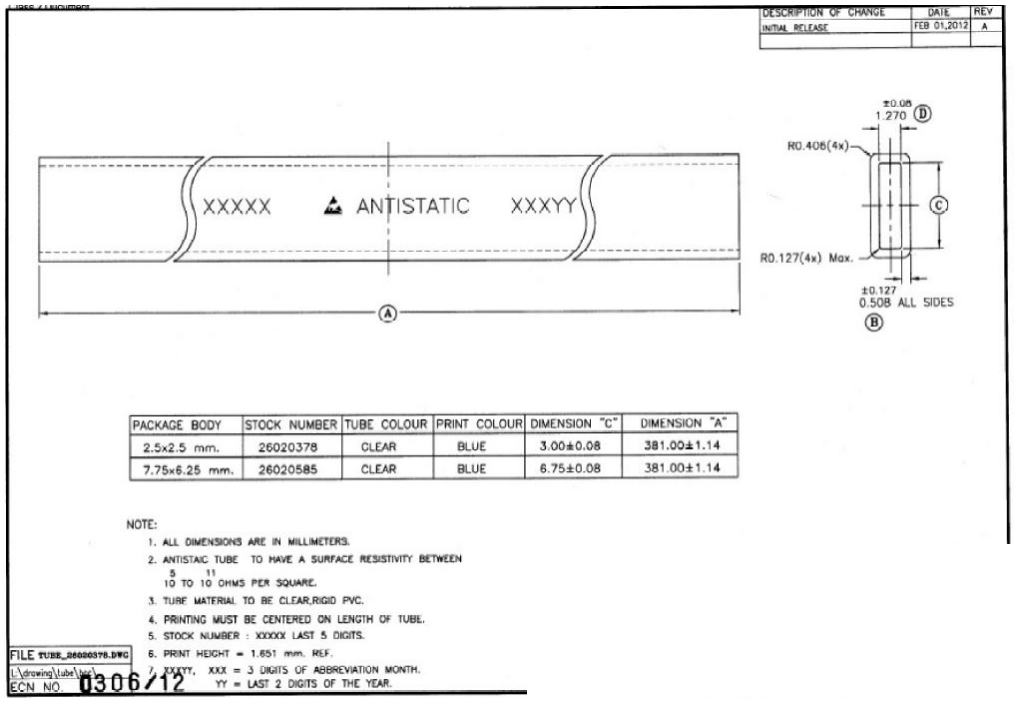

Change Summary –H4A Packing TUBE

Description	NSEB	STAR
Packing Material/Method		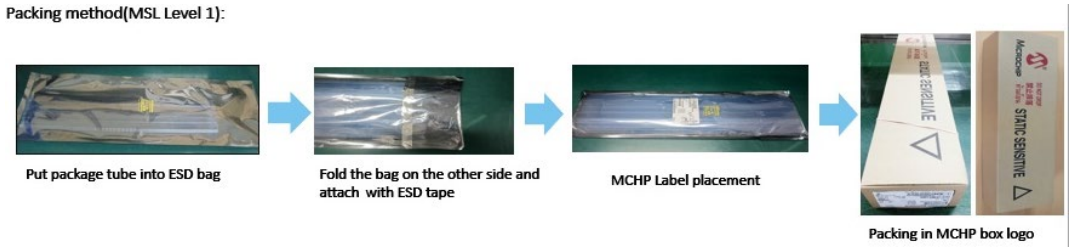

Change Summary –H4A Packing TUBE

Description	NSEB	STAR
Packing Material-Inner Box Size	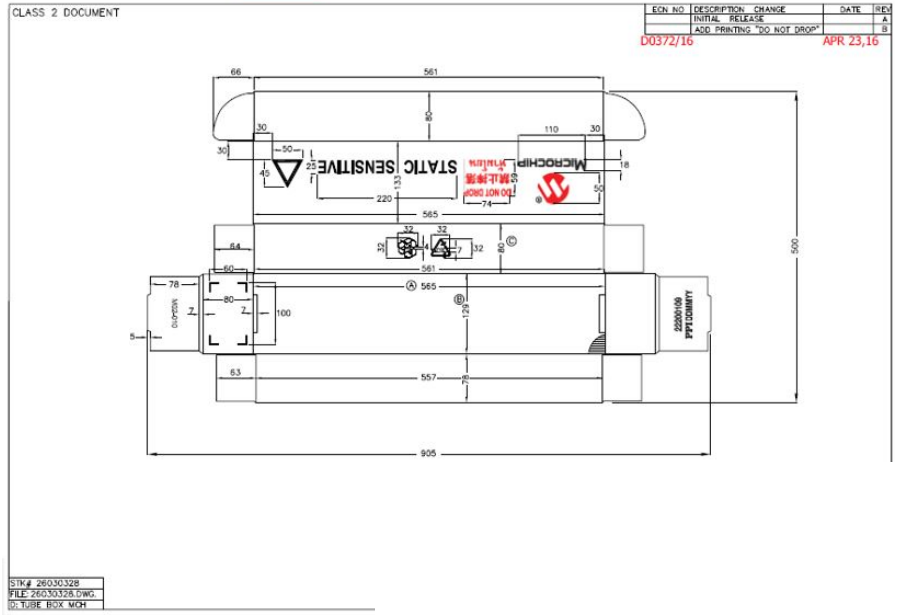	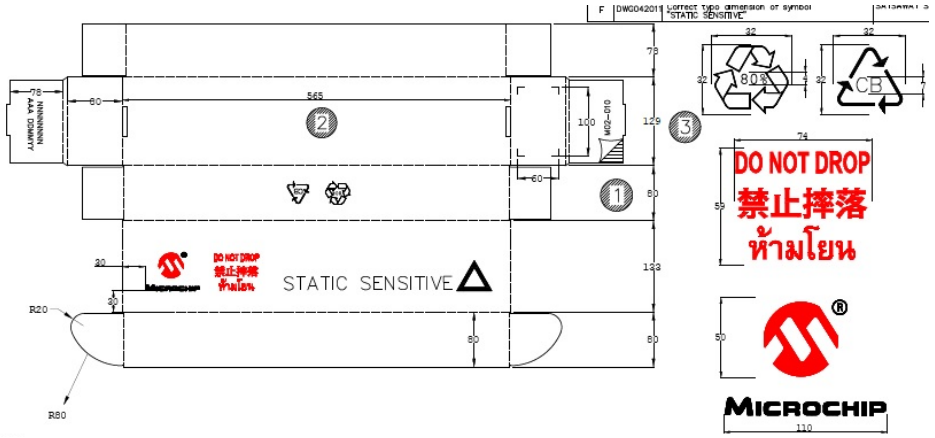

Change Summary –J5A Packing -TUBE

Item	Package codes	Package Type	Media	Description	NSEB	STAR	GAP
1	J5A	VDFN COL-4 (2.0x2.5mm)	TUBE	Pin1 Orientation	Pin one of the units must be oriented towards the beginning of words on tube (eg.ANTISTATIC)	Pin one of the units must be oriented towards the beginning of words on tube (eg.ANTISTATIC)	No
2	J5A	VDFN COL-4 (2.0x2.5mm)	TUBE	BQM	140	140	No
3	J5A	VDFN COL-4 (2.0x2.5mm)	TUBE	Tube Color	Clear	Clear	No
5	J5A	VDFN COL-4 (2.0x2.5mm)	TUBE	PLUG COLOR	Plug pin one : GREY Opposite pin one : BLUE	Plug pin one : GREY Opposite pin one : BLUE	No

MICROCHIP

Change Summary –J5A Packing -TUBE

Description	NSEB	STAR
Tube Dimension	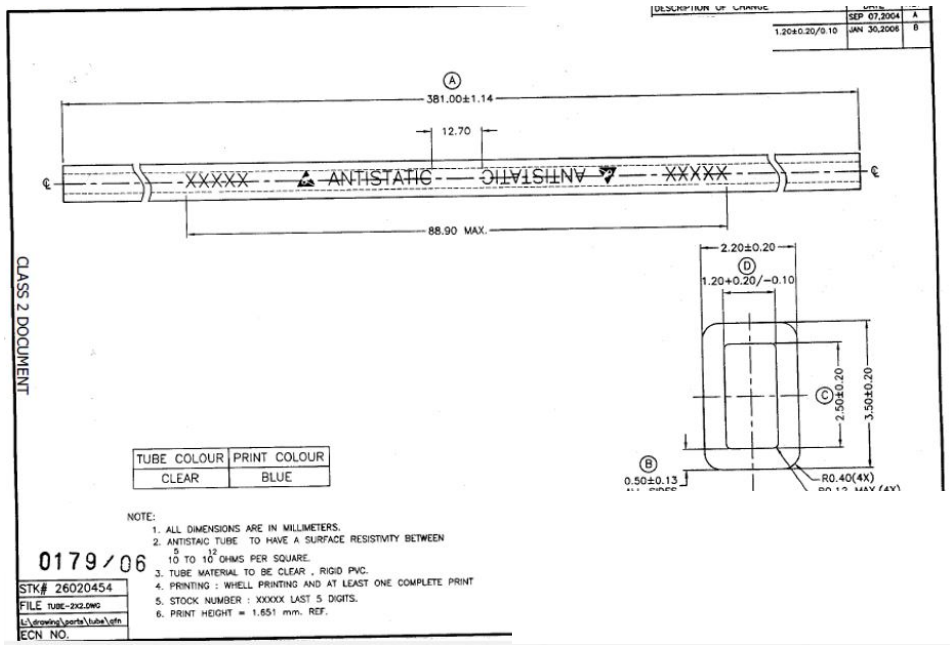	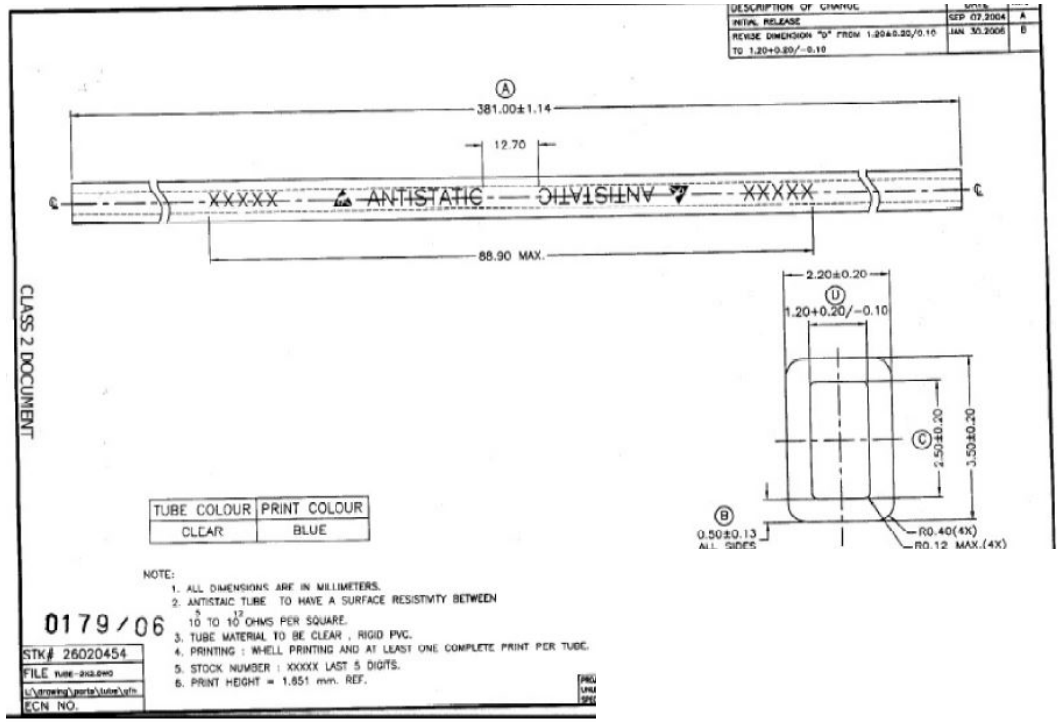

Change Summary –J5A Packing -TUBE

Description	NSEB	STAR
Packing Material/Method		Packing method(MSL Level 1): 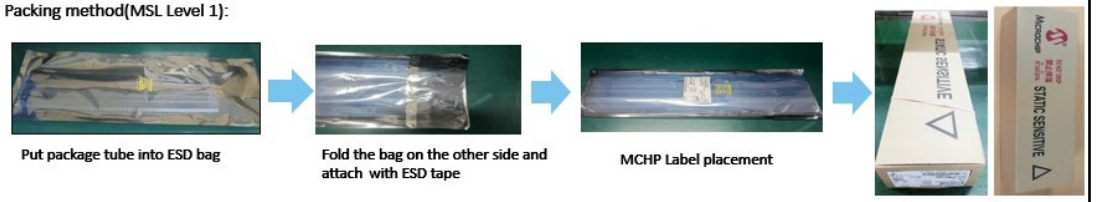

Change Summary –J5A Packing -TUBE

Description	NSEB	STAR
Packing Material-Inner Box Size	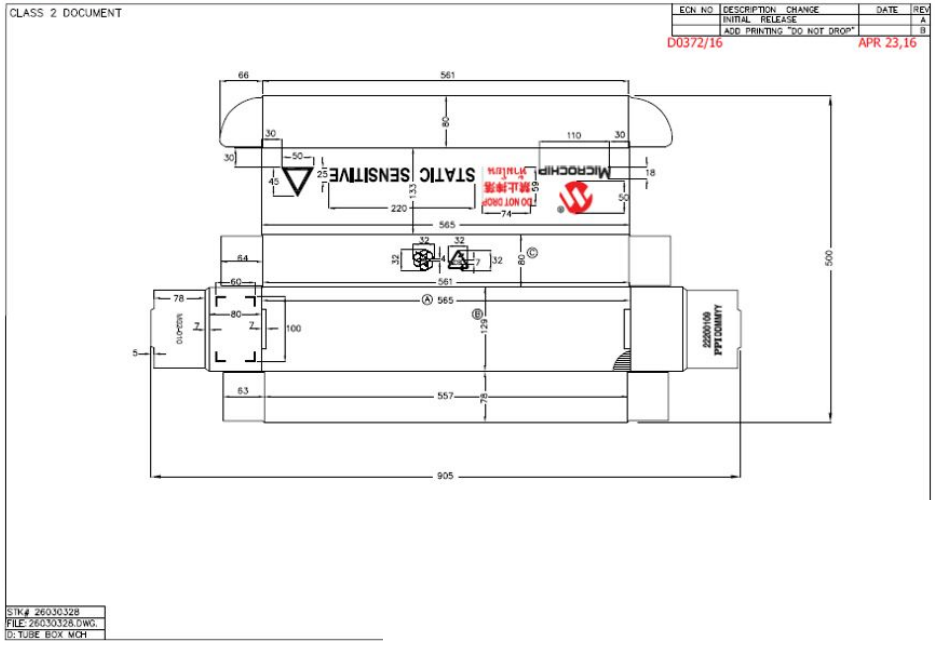	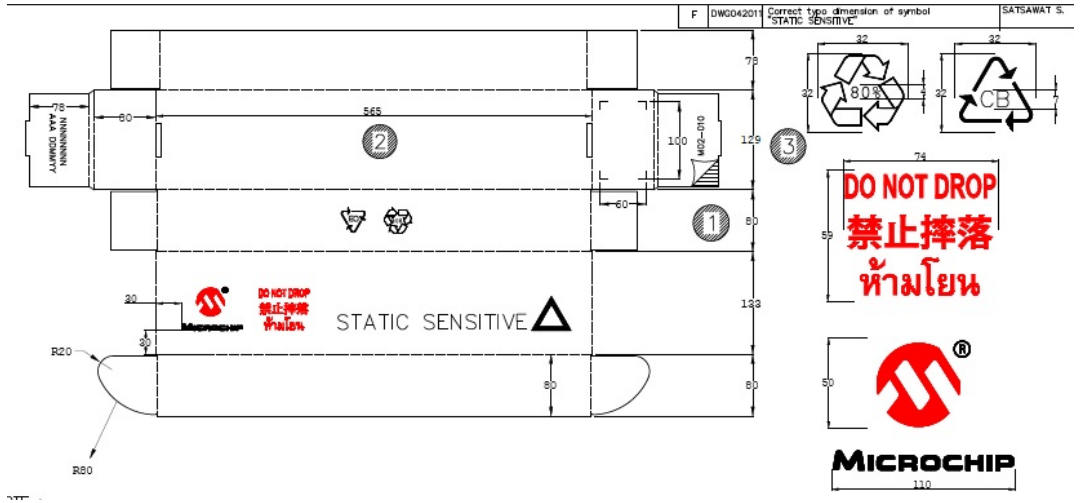

Change Summary –H6A Packing TUBE

Item	Package codes	Package Type	Media	Description	NSEB	STAR	GAP
1	H6A	VDFN COL-4 (3.2x5.0x0.9mm)	TUBE	Pin1 Orientation	Pin one of the units must be oriented towards the beginning of words on tube (eg.ANTISTATIC)	Pin one of the units must be oriented towards the beginning of words on tube (eg.ANTISTATIC)	No
2	H6A	VDFN COL-4 (3.2x5.0x0.9mm)	TUBE	BQM	72	72	No
3	H6A	VDFN COL-4 (3.2x5.0x0.9mm)	TUBE	Tube Color	Clear	Clear	No
5	H6A	VDFN COL-4 (3.2x5.0x0.9mm)	TUBE	PLUG COLOR	Plug pin one : GREY Opposite pin one : BLUE	Plug pin one : GREY Opposite pin one : BLUE	No

MICROCHIP

Change Summary –H6A Packing TUBE

Description	NSEB	STAR
Tube Dimension	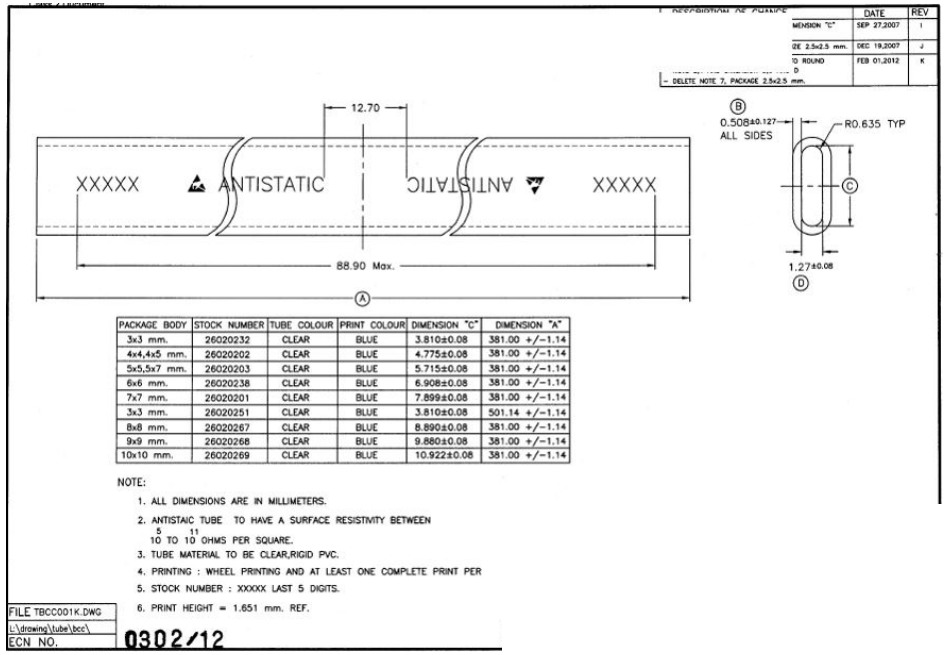	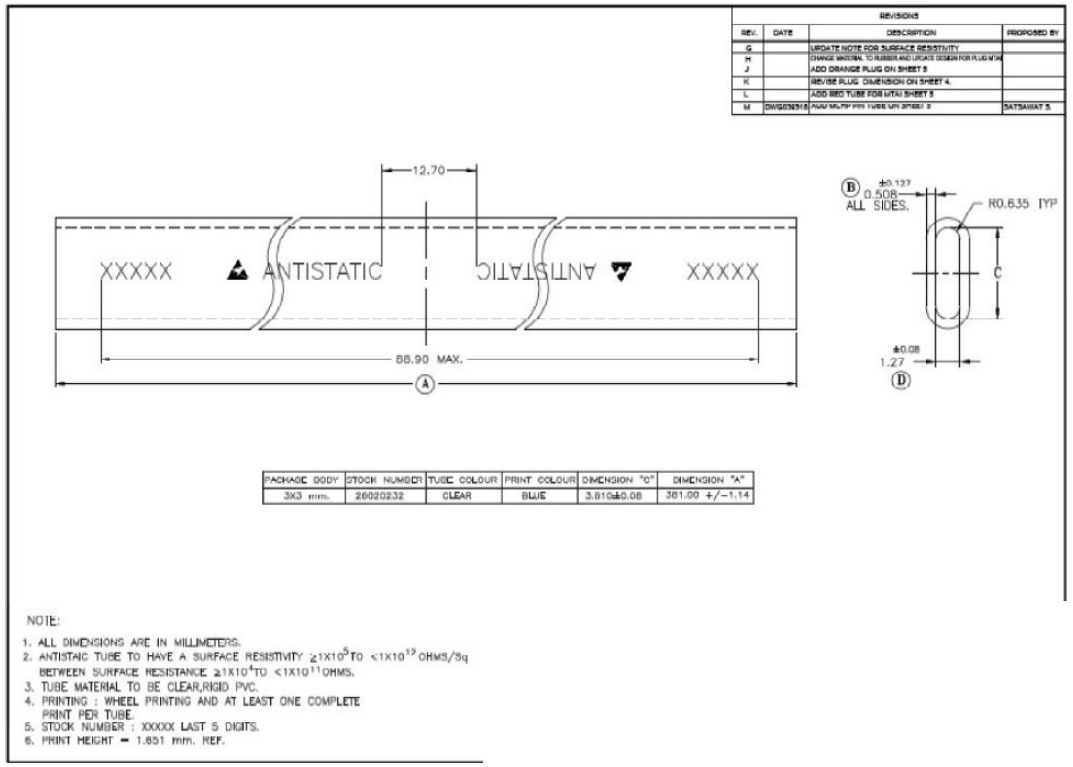

Change Summary –H6A Packing TUBE

Description	NSEB	STAR
Packing Material/Method	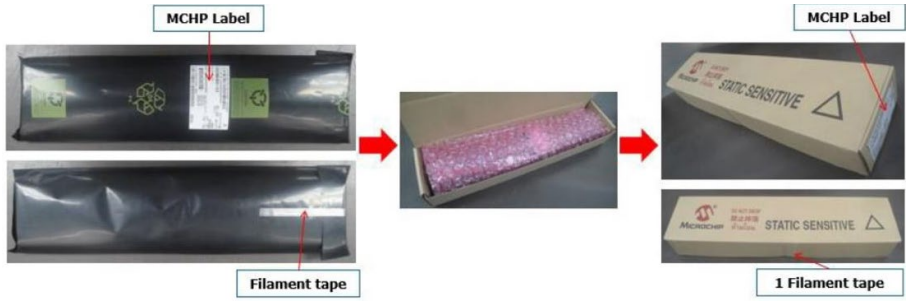	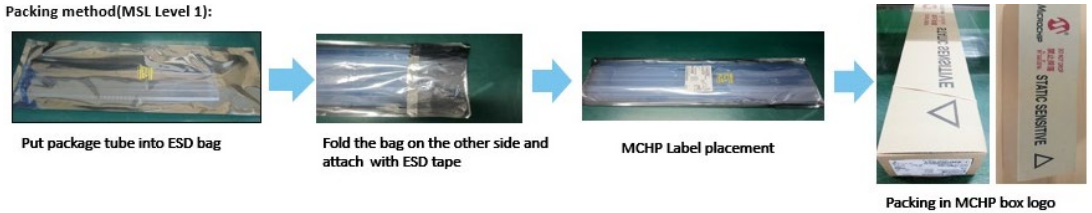

Change Summary –H6A Packing TUBE

Description	NSEB	STAR
Packing Material-Inner Box Size	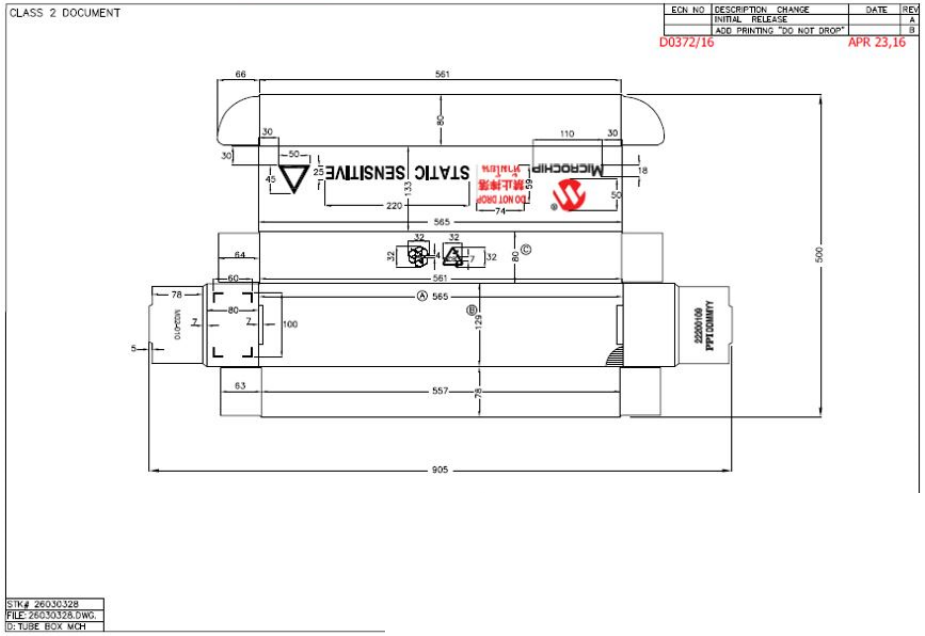	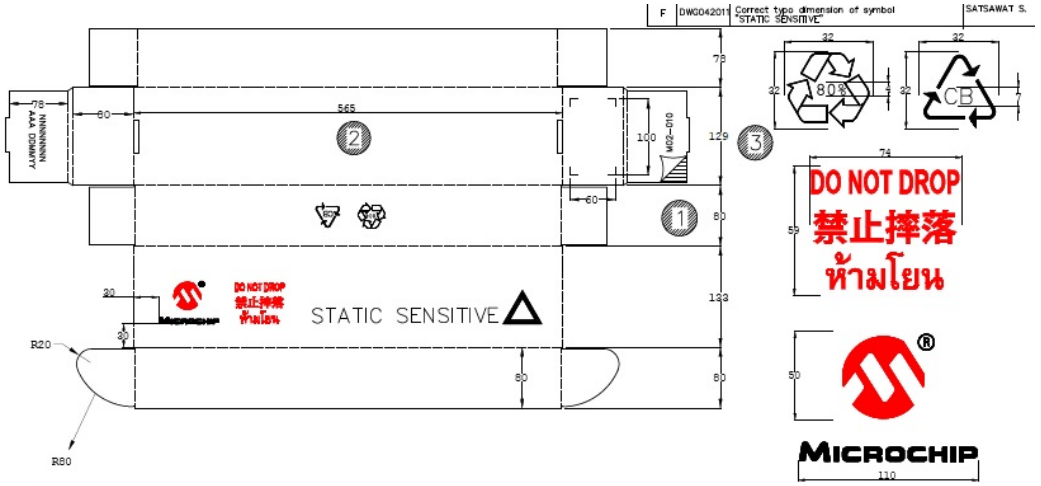

CCB 4928
Pre and Post Change Summary
1 of 2
PCN #: ASER-09RAOP971

A Leading Provider of Smart, Connected and Secure Embedded Control Solutions

SMART | CONNECTED | SECURE

Qualification of STAR as an additional final test site for selected DSC100xxx device family available in 4L VDFN (3.2x2.5x0.9mm), (2.0x2.5mm) and (3.2x5.0x0.9mm) packages.

Change Summary –H4A Packing TR

Item	Package codes	Package Type	Media	Description	NSEB	STAR	GAP
1	H4A	VDFN COL-4 (3.2x2.5x0.9mm)	T/R	Pin1 Orientation	Quadrant 1	Quadrant 1	No
2	H4A	VDFN COL-4 (3.2x2.5x0.9mm)	T/R	BQM	1,000 3,000	1,000 3,000	No

MICROCHIP

Change Summary –H4A Packing TR

Description	NSEB	STAR
Carrier Tape	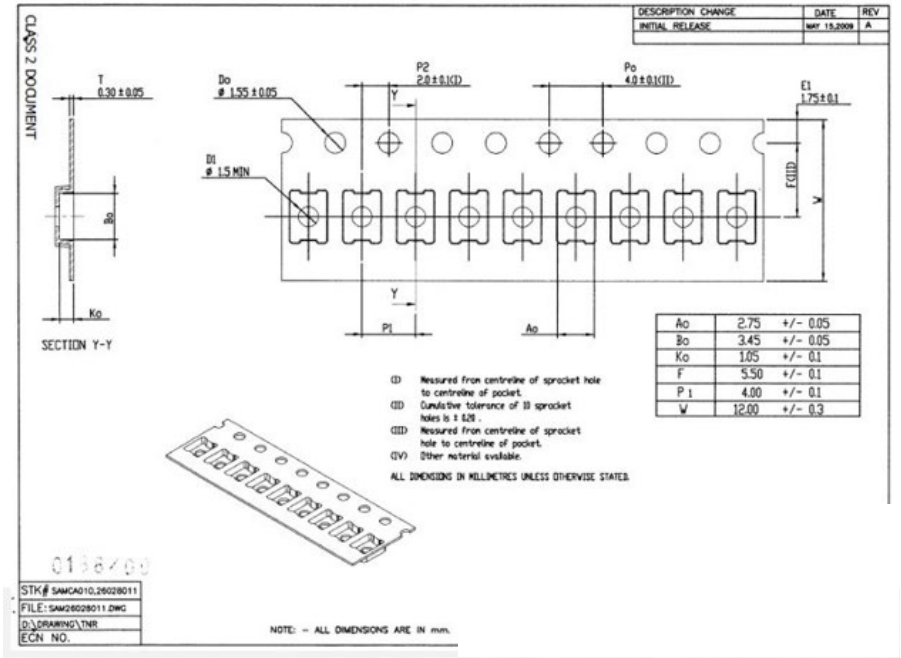	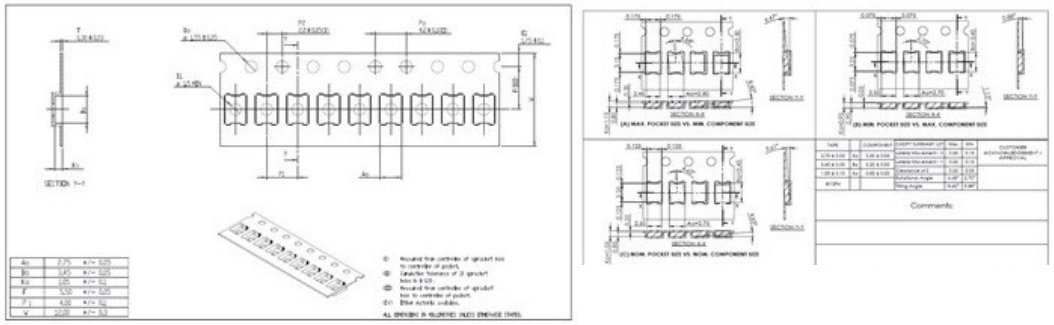

Change Summary –H4A Packing TR

Description	NSEB	STAR
Cover Tape	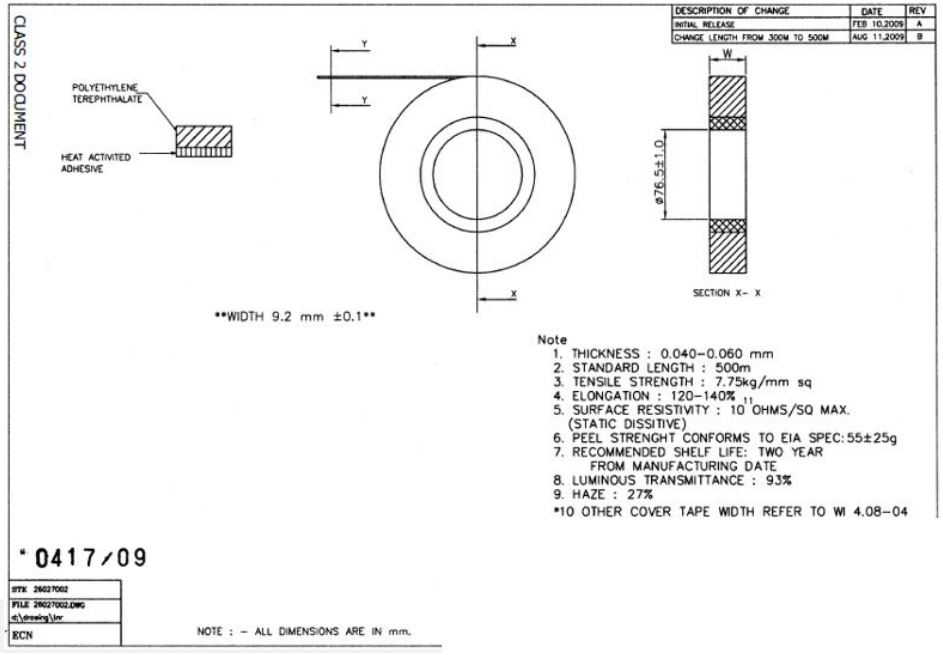	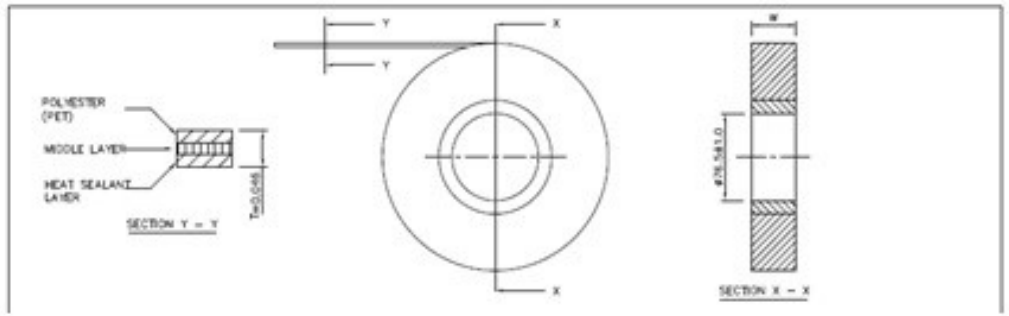

Change Summary –H4A Packing TR

Description	NSEB	STAR
Plastic Reel	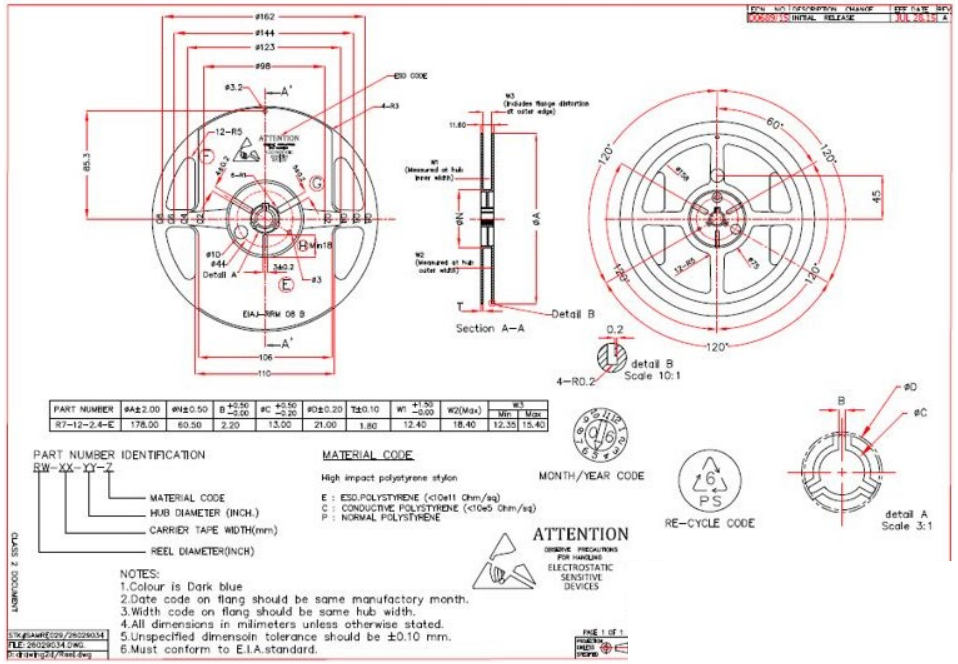	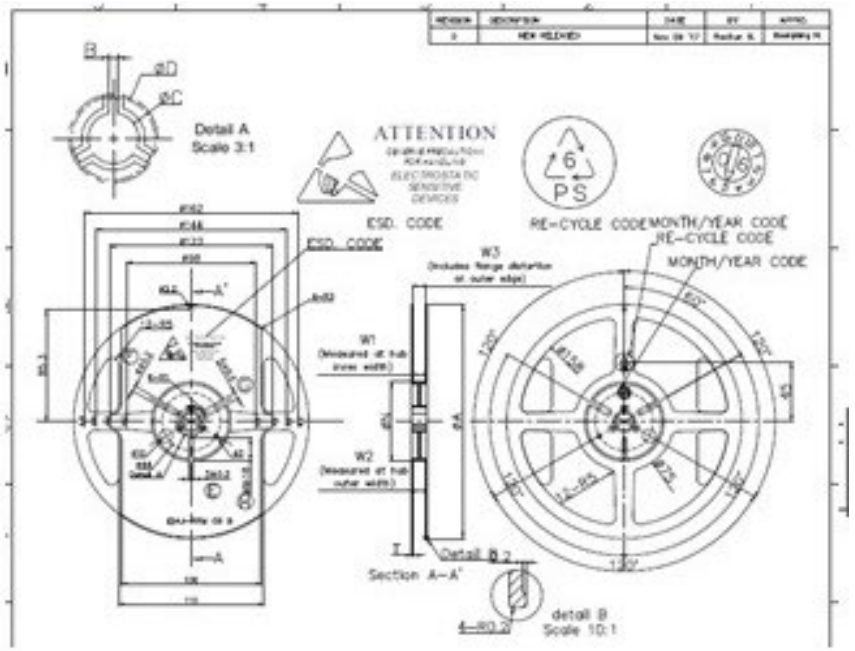

Change Summary –H4A Packing TR

Description	NSEB	STAR
Packing Material/Method		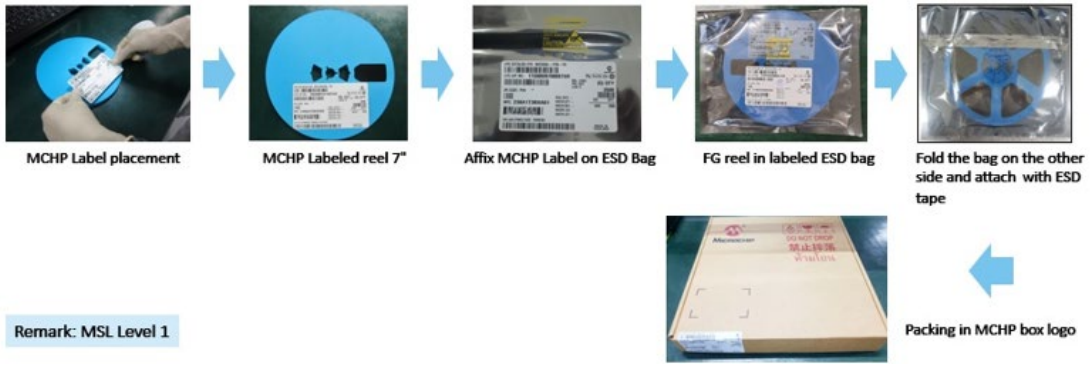 Remark: MSL Level 1

Change Summary –J5A Packing TR

Item	Package codes	Package Type	Media	Description	NSEB	STAR	GAP
1	J5A	VDFN COL-4 (2.0x2.5mm)	T/R	Pin1 Orientation	Quadrant 1	Quadrant 1	No
2	J5A	VDFN COL-4 (2.0x2.5mm)	T/R	BQM	1,000 3,000 10,000	1,000 3,000 10,000	No

MICROCHIP

Change Summary –J5A Packing TR

Description	NSEB	STAR
Carrier Tape	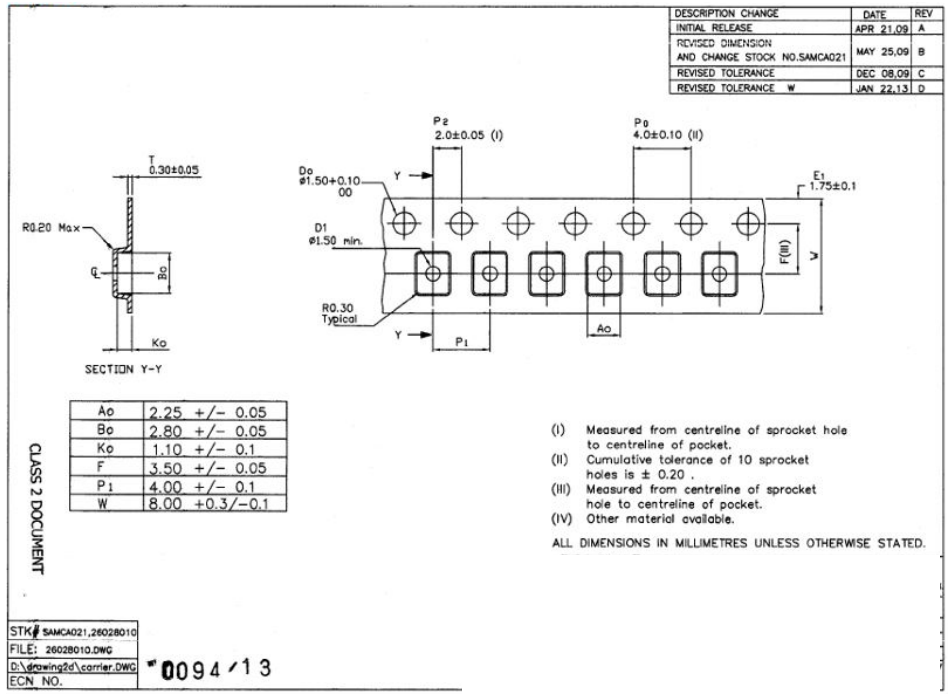	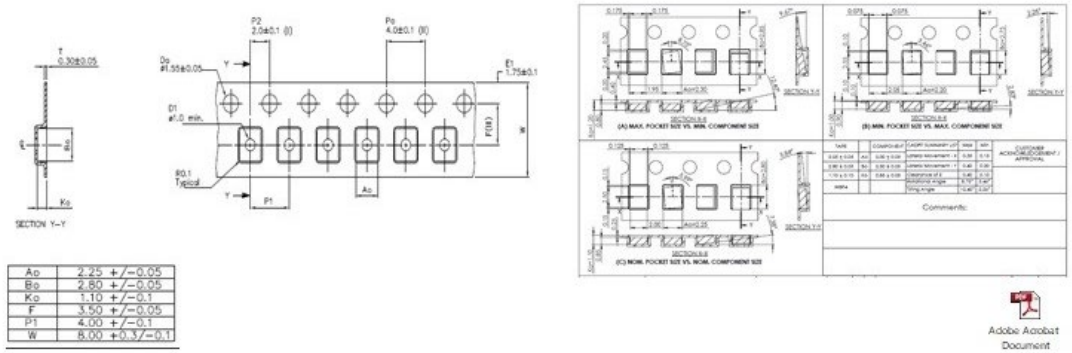

Change Summary –J5A Packing TR

Description	NSEB	STAR
Cover Tape	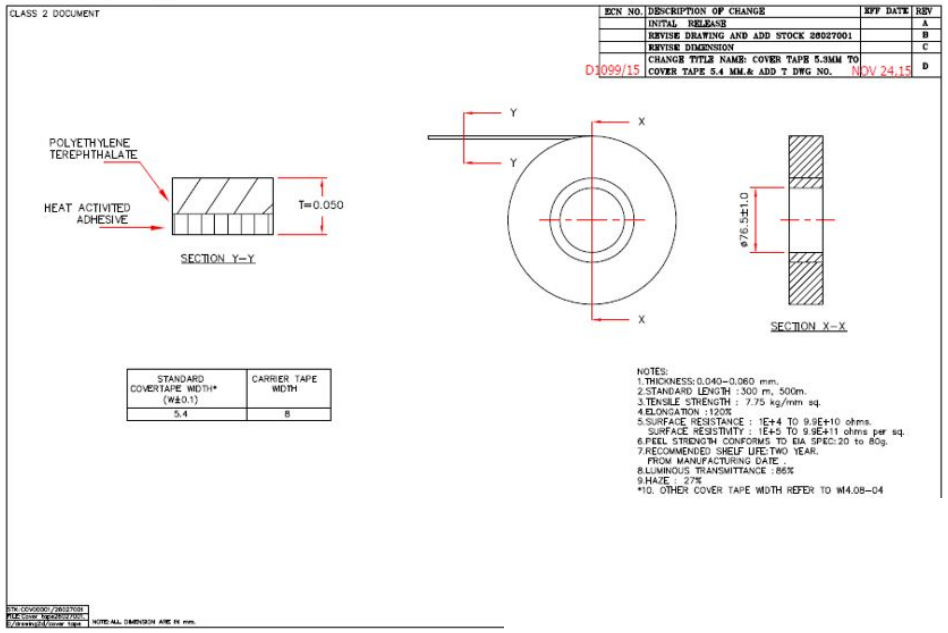	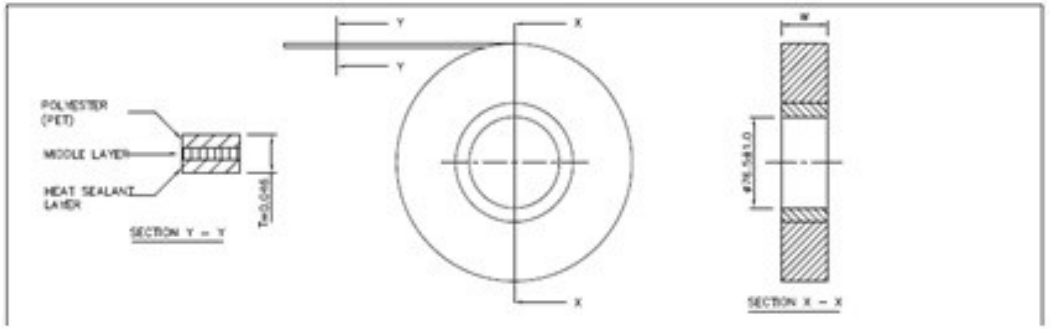

Change Summary –J5A Packing TR

Description	NSEB	STAR
Plastic Reel	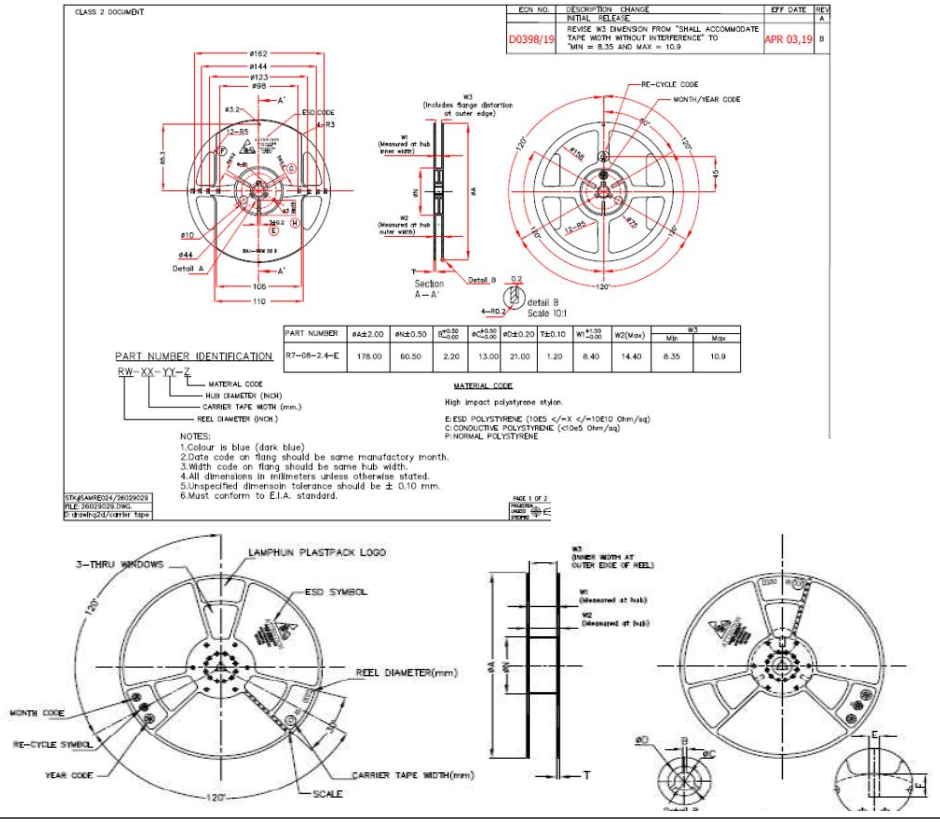	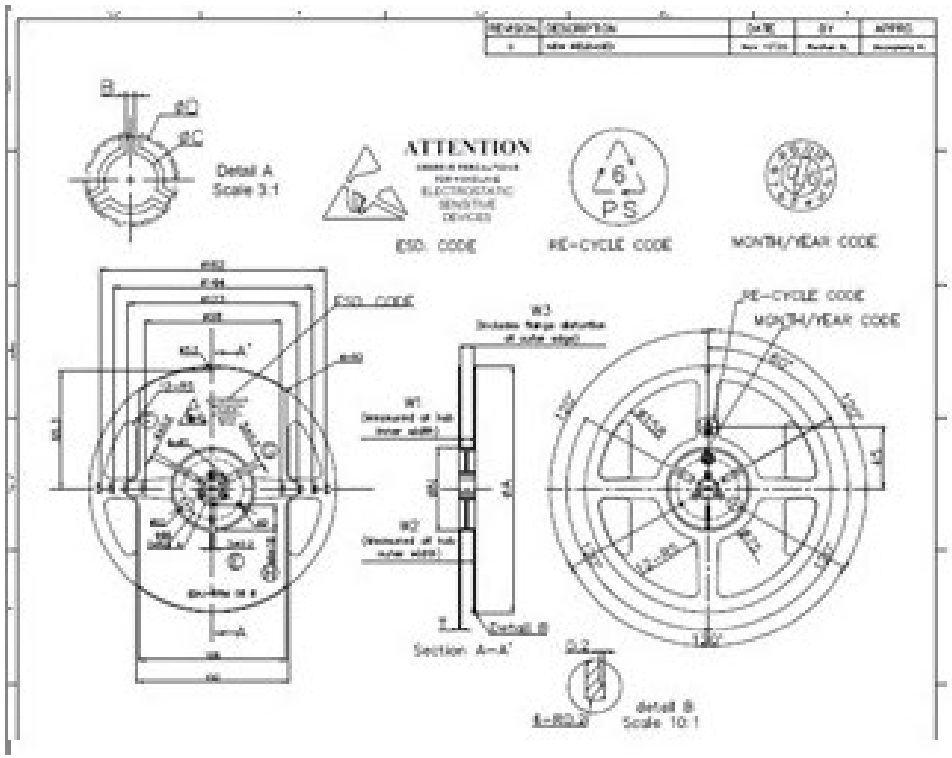

Change Summary –J5A Packing TR

Description	NSEB	STAR
Packing Material/Method		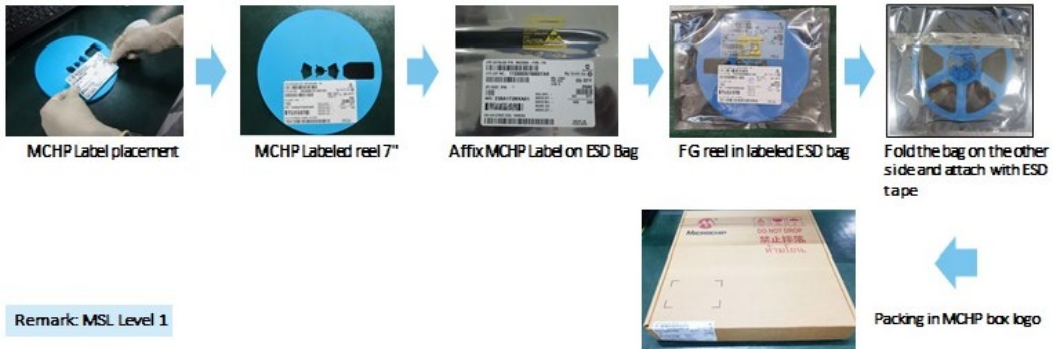

Change Summary –H6A Packing TR

Item	Package codes	Package Type	Media	Description	NSEB	STAR	GAP
1	H6A	VDFN COL-4 (3.2x5.0x0.9mm)	T/R	Pin1 Orientation	Quadrant 1	Quadrant 1	No
2	H6A	VDFN COL-4 (3.2x5.0x0.9mm)	T/R	BQM	1,000	1,000	No

MICROCHIP

Change Summary –H6A Packing TR

Description	NSEB	STAR
Carrier Tape	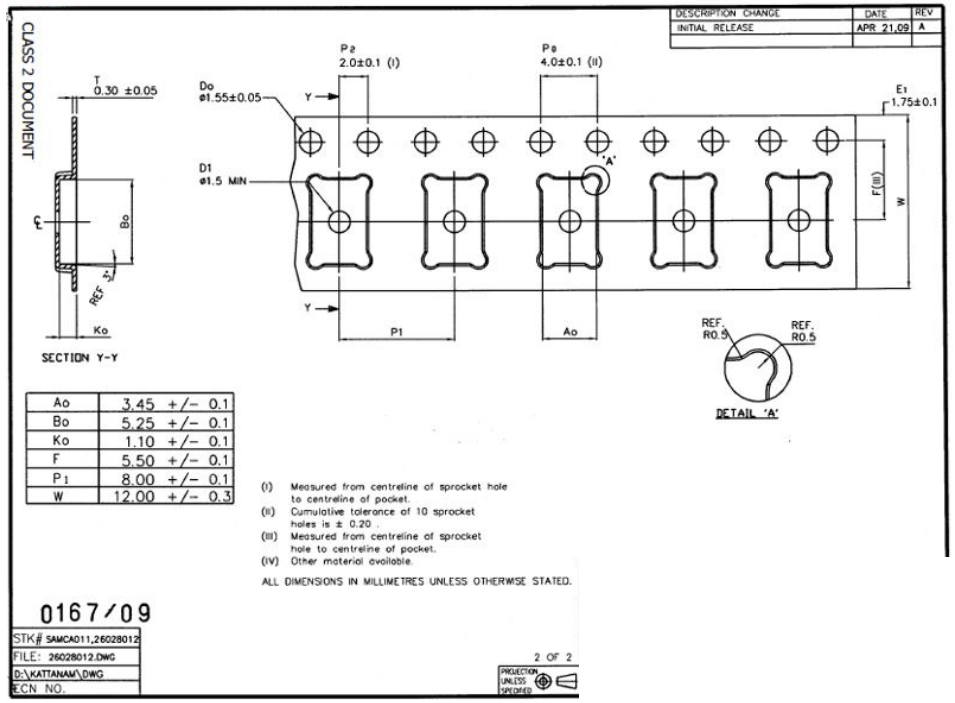	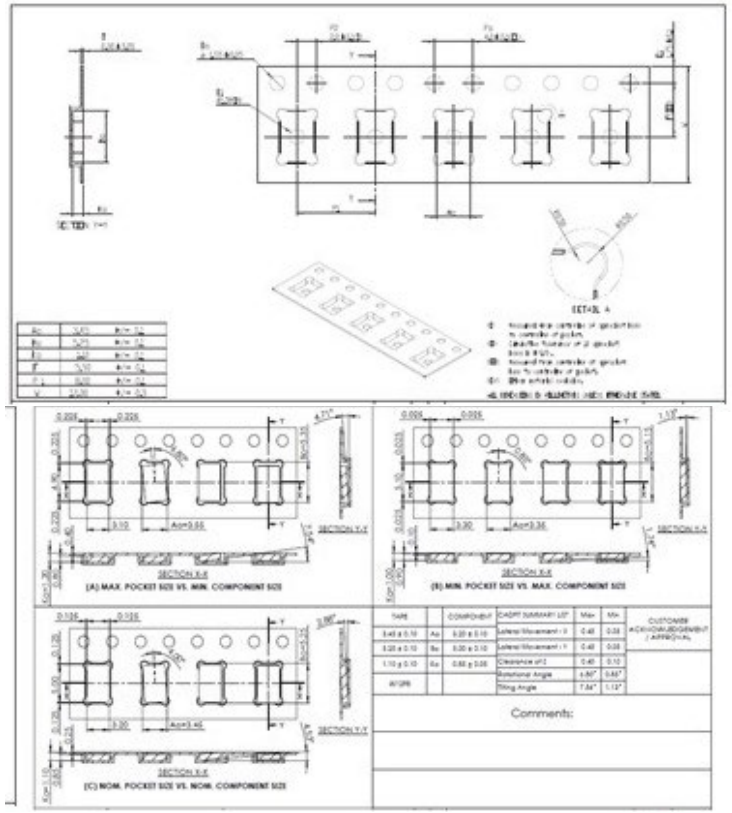

Change Summary –H6A Packing TR

Description	NSEB	STAR
Cover Tape	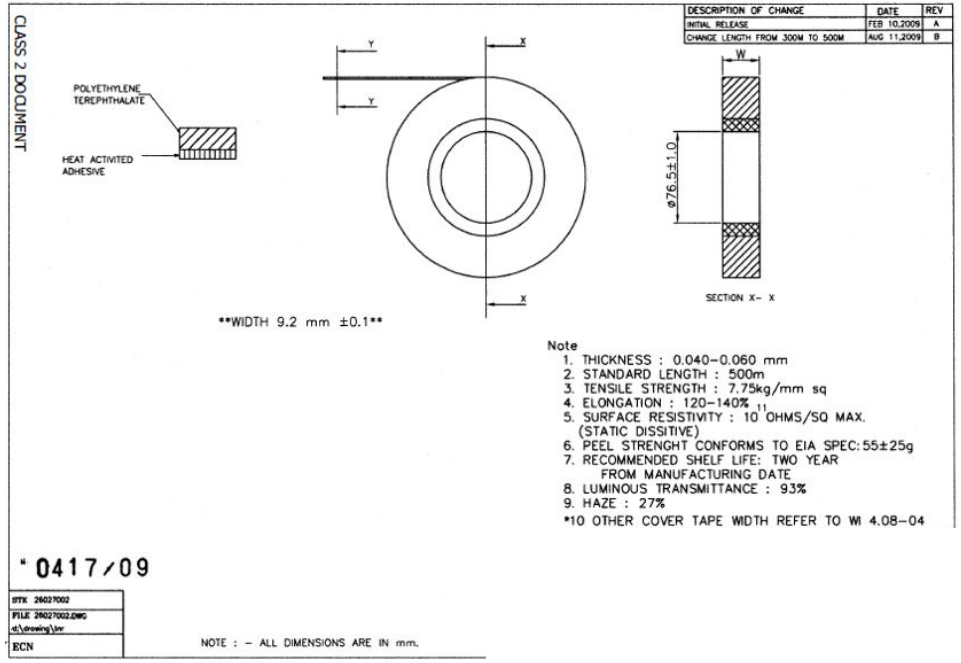	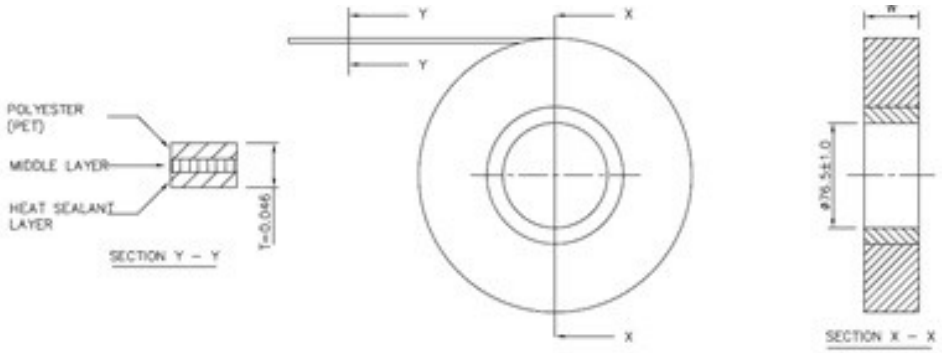

Please open attachment PCN_ASER-09RAOP971_Pre and Post Change Summary 2 of 2 for continued comparisons.

QUALIFICATION REPORT SUMMARY

PCN #: ASER-09RAOP971

Date
October 29, 2021

Qualification of STAR as an additional final test site for selected DSC100xxx device family available in 4L VDFN (3.2x2.5x0.9mm), (2.0x2.5mm) and (3.2x5.0x0.9mm) packages.

Purpose: Qualification of STAR as an additional final test site for selected DSC100xxx device family available in 4L VDFN (3.2x2.5x0.9mm), (2.0x2.5mm) and (3.2x5.0x0.9mm) packages.

CCB No.: 4928

Test / Evaluation	Test Conditions / Parameters
Original Final Test Site Correlation	• Run 3,000 devices to the final test flows at the original site and keep the good devices and rejects in separate bins.
Original Final Test Site Characterization	• Characterize 33 good devices at the original test site with DC items and measurable functional test items which are specified in the product datasheet (ex. Tce, Icc, Isb, Vih, Vil, Voh, Vol) and send these devices to the destination final test site.
Destination Final Test Site Characterization	• Re-characterize the same 33 good devices at the destination test site using the destination site hardware/programs for the same DC and measurable functional test items. The results will be accepted if the variance within ± 10% of the measured values from the original test site.
Destination Final Test Site Correlation	• Send 3,000 tested parts to the destination test site. The results need 100% correlation to continue the release flow.
Destination Final Test Site Cross Correlation	• Run 33 untested devices from the destination test site with same FT program; keep the good devices and rejects separate by bins and send all devices to the original test site for correlation . Re-test those 33 devices from destination test site bin- by-bin to the same FT program for correlation. The yield difference should be within 0.1% and bin-to-bin difference should be within 0.1%

Affected Catalog Part Numbers (CPN)

DSC1001CI1-004.0000T
DSC1001CI5-014.7456T
DSC1001DE2-032.0000
DSC1001DE5-016.0000
DSC1001DE5-019.2000
DSC1001DL1-008.0000
DSC1001DE2-024.0000
DSC1001DL1-027.0000
DSC1001DL1-025.0000
DSC1001DL2-001.0000
DSC1001DL2-001.4850
DSC1001DL2-008.0000
DSC1001DL2-012.0000
DSC1001DL2-013.5600
DSC1001DL2-020.0000
DSC1001DL2-024.0000
DSC1001DL2-025.0000
DSC1001DL2-027.0000
DSC1001DL2-030.0000
DSC1001DL2-033.3333
DSC1001DL2-032.0000
DSC1001DL5-001.0000
DSC1001DL5-001.8432
DSC1001DL5-002.0000
DSC1001DL2-050.0000
DSC1001DL5-008.0000
DSC1001DL5-007.3728
DSC1001DL5-016.0000
DSC1001DL5-010.0000
DSC1001DL5-020.0000
DSC1001DL5-024.0000
DSC1001DL5-025.0000
DSC1001DL5-027.0000
DSC1001DL5-030.0000
DSC1001DL5-031.2500
DSC1001DL5-054.0000
DSC1001DL5-026.0000
DSC1001DL5-100.0000
DSC1003DE1-040.0000
DSC1001DL5-033.0000
DSC1003DL2-008.0000
DSC1001DL5-048.0000
DSC1001DL5-050.0000
DSC1003DL5-020.0000
DSC1003DL5-100.0000
DSC1003DL5-125.0000

DSC1003DL5-148.5000
DSC1001DL5-015.3600
DSC1003DL1-125.0000
DSC1003DL2-025.0000
DSC1003DL5-025.0000
DSC1001DL5-125.0000
DSC1001DL5-080.0000
DSC1001DE2-020.0000
DSC1001DE1-012.0000
DSC1003DL2-070.0000
DSC1001DL5-010.2000
DSC1001DL2-037.1250
DSC1001DE1-040.0000
DSC1001DE1-050.0000
DSC1001DL2-150.0000
DSC1001DL5-011.0592
DSC1001DL2-090.0000
DSC1001DL5-012.0000
DSC1001DL5-004.0000
DSC1001DE1-025.0000
DSC1001DL5-133.3330
DSC1001DL1-010.0000
DSC1001DL5-019.2000
DSC1001DL5-033.3330
DSC1001DL5-075.0000
DSC1001DL2-072.0000
DSC1003DL2-100.0000
DSC1001DL2-087.0655
DSC1001DE5-018.4320
DSC1001DL1-080.0000
DSC1001DL2-003.9000
DSC1001DL2-013.5000
DSC1001DL2-074.2500
DSC1001DL5-128.0000
DSC1003DE1-024.0000
DSC1001DL1-024.0000
DSC1001DL5-024.5760
DSC1004DI2-016.0000
DSC1001DI1-012.8000
DSC1003DI5-024.5760
DSC1004DI2-100.0000
DSC1004DI2-048.0000
DSC1004DI2-060.0000
DSC1004DI2-072.0000
DSC1004DI2-086.4000
DSC1004DI5-025.0000
DSC1004DI5-066.4860
DSC1004DI5-066.5800
DSC1001DI5-010.0000

DSC1001DI5-024.0000
DSC1001DI5-024.5760
DSC1001DI5-033.3330
DSC1001DI5-001.8432
DSC1001DI2-018.0000
DSC1001DI5-044.0000
DSC1001DI5-048.0000
DSC1001DI5-050.0000
DSC1001DI5-060.0000
DSC1001DI5-075.0000
DSC1001DI5-080.0000
DSC1001DI1-074.2500
DSC1001DL5-032.0000
DSC1001DI1-054.0000
DSC1001DI1-027.0000
DSC1001DI2-054.0000
DSC1001DI5-047.3385
DSC1001DI1-060.0000
DSC1001DI2-006.7800
DSC1001DI2-004.0960
DSC1001DI2-030.0000
DSC1001DI2-001.8432
DSC1001DI2-066.0000
DSC1001DI5-133.3330
DSC1004DI1-006.7800
DSC1001DI5-018.4320
DSC1001DI1-018.4320
DSC1001DI2-004.0000
DSC1001DI1-004.9152
DSC1001DI2-045.1584
DSC1001DI2-049.1520
DSC1001BI5-010.0000T
DSC1001BI5-012.0000T
DSC1001CL1-076.0000
DSC1001DL2-049.5000
DSC1001CL1-076.0000T
DSC1001DL2-024.0000T
DSC1001DL2-049.5000T
DSC1001CC1-024.0000
DSC1001CC1-025.0000
DSC1001CC1-040.0000
DSC1001CC1-047.3333
DSC1001CC2-012.5000
DSC1001CC2-024.0000
DSC1001CC2-025.0000
DSC1001CC1-125.0000
DSC1001CC5-008.5920
DSC1001CC2-050.0000
DSC1001CC2-100.0000

DSC1001CC2-125.0000
DSC1001CC5-024.5760
DSC1001CC2-012.2880
DSC1001CC1-008.0000
DSC1001CC2-033.0000
DSC1001CC1-027.0000
DSC1001BC1-020.0000
DSC1001BC1-080.0000
DSC1001BC1-040.0000
DSC1001BC1-024.0000
DSC1001DC1-004.9152
DSC1001DC1-025.0000
DSC1001DC1-027.0000
DSC1001DC1-050.0000
DSC1001DC2-004.9152
DSC1001DC2-025.0000
DSC1001DC2-027.0000
DSC1001DC5-012.0000
DSC1001DC5-024.5760
DSC1001DC5-038.8800
DSC1001DC5-040.0000
DSC1004DC1-020.0000
DSC1001DC5-037.4000
DSC1001DC5-012.8000
DSC1001DC1-100.0000
DSC1001CI1-001.0000
DSC1001CI1-008.0000
DSC1001CI1-012.0000
DSC1001CI1-012.2880
DSC1001CI2-028.6363
DSC1001CI1-016.0000
DSC1001CI1-019.2000
DSC1001CI1-024.0000
DSC1001CI1-025.0000
DSC1001CI1-026.0000
DSC1001CI1-027.0000
DSC1001CI1-020.0000
DSC1001CI1-033.3333
DSC1001CI1-047.3333
DSC1001CI1-048.0000
DSC1001CI1-050.0000
DSC1001CI2-002.0480
DSC1001CI2-004.0000
DSC1001CI2-008.0000
DSC1001CI2-011.0592
DSC1001CI2-012.0000
DSC1001CI2-012.2880
DSC1001CI2-014.3181
DSC1001CI2-014.7456

DSC1001CI2-016.0000
DSC1001CI2-018.0000
DSC1001CI2-018.4320
DSC1001CI2-020.0000
DSC1001CI2-022.5792
DSC1001CI2-024.0000
DSC1001CI2-024.5760
DSC1001CI2-025.0000
DSC1001CI2-027.0000
DSC1001CI2-003.5795
DSC1001CI1-007.5000
DSC1001CI2-032.7680
DSC1001CI2-033.0000
DSC1001CI2-033.3300
DSC1001CI2-033.3333
DSC1001CI2-026.0000
DSC1001CI2-037.1250
DSC1001CI2-040.0000
DSC1001CI2-048.0000
DSC1001CI2-050.0000
DSC1001CI2-060.0000
DSC1001CI2-066.6666
DSC1001CI2-074.2500
DSC1001CI2-080.0000
DSC1001CI2-100.0000
DSC1001CI5-004.9152
DSC1001CI5-010.0000
DSC1001CI5-019.2000
DSC1001CI5-020.0000
DSC1001CI5-024.0000
DSC1001CI5-025.0000
DSC1001CI5-026.0000
DSC1001CI5-032.7680
DSC1001CI5-037.1250
DSC1001CI5-040.0000
DSC1001CI5-050.0000
DSC1001CI2-054.0000
DSC1001CI5-100.0000
DSC1003CI1-050.0000
DSC1003CI5-020.0000
DSC1003CI5-087.5000
DSC1001CI2-125.0000
DSC1001CI5-012.0000
DSC1004CI5-081.0000
DSC1001CI5-008.0000
DSC1001CI5-012.2880
DSC1001CI2-096.0000
DSC1003CI5-025.0000
DSC1001CI5-018.4320

DSC1001CI5-016.0000
DSC1001CI5-024.5760
DSC1001CI5-027.0000
DSC1001CI5-030.0000
DSC1001CI1-003.6864
DSC1001CI2-012.5000
DSC1001CI5-009.6000
DSC1001CI1-100.0000
DSC1001CI2-006.0000
DSC1001DI5-033.3333T
DSC1001CE1-025.0000
DSC1001CE1-033.8688
DSC1001BI2-029.4912T
DSC1001BI3-033.0000T
DSC1001BI3-050.0000T
DSC1001BI2-001.5440T
DSC1001BI1-033.0000T
DSC1001BI1-133.0000T
DSC1003BI5-040.0000T
DSC1001BI2-011.0592T
DSC1001BI5-019.6800T
DSC1001BI1-003.6864T
DSC1004BI5-121.5000T
DSC1001BI2-003.1250T
DSC1001BI5-066.6660T
DSC1004BI5-005.0000T
DSC1001BI1-099.0000T
DSC1001BI2-099.0000T
DSC1001BI5-040.9600T
DSC1001BI2-003.6864T
DSC1001BI3-020.0000T
DSC1001BI2-040.6800T
DSC1001BI2-033.3300T
DSC1001BI3-022.5792T
DSC1001BI3-024.5760T
DSC1001BI2-048.4610T
DSC1001BI5-024.5760T
DSC1001BI5-150.0000T
DSC1001BI2-027.1200T
DSC1001BI2-060.0000T
DSC1001DI1-001.8432T
DSC1001DI1-003.6864T
DSC1001DI1-004.0000T
DSC1001DI1-005.0000T
DSC1001DI1-005.0196T
DSC1001DI1-008.0000T
DSC1001DI1-010.0000T
DSC1001DI1-012.0000T
DSC1001DI1-014.7456T

DSC1001DI1-016.0000T
DSC1001DI1-016.3840T
DSC1001DI1-019.2000T
DSC1001DI1-020.0000T
DSC1001DI1-024.0000T
DSC1001DI1-024.5760T
DSC1001DI1-025.0000T
DSC1001DI1-026.0000T
DSC1001DI1-027.0000T
DSC1001DI1-033.3000T
DSC1001DI1-133.0000T
DSC1001DI1-033.3330T
DSC1001DI1-033.3333T
DSC1001DI1-048.0000T
DSC1001DI1-125.0000T
DSC1001DI1-050.0000T
DSC1001DI1-033.3300T
DSC1001DI1-098.3040T
DSC1001DI2-009.6000T
DSC1001DI2-001.0000T
DSC1001DI2-003.6864T
DSC1001DI2-004.0960T
DSC1001DI2-005.0196T
DSC1001DI2-008.0000T
DSC1001DI2-010.0000T
DSC1001DI2-012.0000T
DSC1001DI2-012.2880T
DSC1001DI2-016.0000T
DSC1001DL5-001.0000T
DSC1001DI2-033.3300T
DSC1001DI2-019.2000T
DSC1001DI2-020.0000T
DSC1001DI2-022.0000T
DSC1001DI2-022.5792T
DSC1001DI2-024.0000T
DSC1001DI2-024.5455T
DSC1001DI2-024.5760B
DSC1001DI2-024.5760T
DSC1001DI2-025.0000T
DSC1001DI2-026.0000T
DSC1001DI2-027.0000T
DSC1001DI2-028.3220T
DSC1001DI2-029.5000T
DSC1001DI2-032.0000T
DSC1001DI2-066.6600T
DSC1001DI2-033.3333T
DSC1001DI2-036.8182T
DSC1001DI2-037.1250T
DSC1001DI5-002.4576T

DSC1001DI2-038.4000T
DSC1001DI2-040.0000T
DSC1001DI2-048.0000T
DSC1001DI2-049.0909T
DSC1001DI2-050.0000T
DSC1001DI2-072.0000T
DSC1001DI2-074.1758T
DSC1001DI2-074.2500T
DSC1001DI2-080.0000T
DSC1001DI2-100.0000T
DSC1001DI2-125.0000T
DSC1001DI2-128.0000T
DSC1001DI4-010.0000T
DSC1001DI4-010.0503T
DSC1001DI4-010.0587T
DSC1001DI4-059.7800T
DSC1001DI4-060.0700T
DSC1001DI4-066.4860T
DSC1001DI4-066.5800T
DSC1004DI2-025.0000T
DSC1001DI5-002.0480T
DSC1001DI2-047.3885T
DSC1001DI1-038.4000T
DSC1001DI2-026.6000T
DSC1001DI1-066.0000T
DSC1001DI5-008.0000T
DSC1001DI5-047.3885T
DSC1001DI5-013.3333T
DSC1001DI5-022.5792T
DSC1001DI5-030.0000T
DSC1001DI2-024.5454T
DSC1001DI5-033.0000T
DSC1001DI1-100.0000T
DSC1004DI2-012.0000T
DSC1001DE5-045.1584
DSC1001DL1-040.0000
DSC1001DL5-064.0000
DSC1004DE2-025.0000
DSC1001DL5-028.6363
DSC1001DL5-006.0000
DSC1001DL1-033.3330
DSC1001DL5-029.4912
DSC1001DL1-004.0000
DSC1001DL2-100.0000
DSC1001DL5-032.4000
DSC1001DL5-049.5000
DSC1001DL2-012.5000
DSC1001DL1-012.5000
DSC1001DL3-125.0000

DSC1001DL5-006.4000
DSC1001DL1-007.3728
DSC1003DL3-020.0000
DSC1003DL3-025.0000
DSC1001DL5-026.5980
DSC1001DL5-120.0000
DSC1001DL5-087.0655
DSC1001CE1-004.0000T
DSC1001CE1-006.0000T
DSC1001CE1-012.0000T
DSC1001CE1-012.2880T
DSC1001CE1-015.3600T
DSC1001CE1-016.5000T
DSC1001CE1-066.6666
DSC1001CE2-012.0000
DSC1001CL1-024.0000
DSC1001CL2-030.0000
DSC1001CE1-019.2000
DSC1001CL1-003.2500
DSC1001CL2-008.0000
DSC1001CL2-025.5760
DSC1001CE1-083.3300
DSC1001CE2-032.0000
DSC1001CE1-050.0000
DSC1001CL5-006.7700
DSC1001CL5-006.7900
DSC1001CL5-013.5400
DSC1001CL5-013.5800
DSC1001CL5-050.3500
DSC1001CL5-001.6000
DSC1001CL5-025.6000
DSC1001CL5-011.0592
DSC1001CE2-018.4320
DSC1001CL5-012.8000
DSC1001CL2-100.0000
DSC1001CL2-054.0000
DSC1004CE1-033.3333
DSC1003CL2-025.0000
DSC1001CE5-016.0000
DSC1001CE1-008.0000
DSC1001CE5-025.0000
DSC1001CL5-048.0000
DSC1001CE1-080.0000
DSC1004CL5-016.0000
DSC1001CE1-033.3300
DSC1001CL2-024.5760
DSC1001CL1-050.0000
DSC1001CL2-014.7456
DSC1001CL2-148.5000

DSC1001CL2-016.0000
DSC1001CE5-012.2880
DSC1003CL2-027.0000
DSC1004CL2-027.0000
DSC1001CL5-016.3840
DSC1001CE5-002.0000
DSC1001CE5-008.0000
DSC1001CE1-026.0000
DSC1004CE1-025.6000
DSC1001CL2-032.0000
DSC1001CL2-033.3300
DSC1001CL5-004.0000
DSC1001CE1-033.3333
DSC1001CL5-075.0000
DSC1003CL5-050.0000
DSC1003CL2-024.0000
DSC1001CE1-006.1760
DSC1001CE1-007.3728
DSC1001CE1-008.1920
DSC1001CE2-060.0000
DSC1001CL1-002.0000
DSC1000CL3-PROG
DSC1000CL5-PROG
DSC1001BL5-072.0000T
DSC1001BL5-066.0000T
DSC1000BL3-PROGT
DSC1000BL5-PROGT
DSC1001BE5-033.3330T
DSC1001BL5-075.0000T
DSC1001BL5-004.0000T
DSC1003BE1-024.0000T
DSC1001BE5-012.0000T
DSC1001BE3-026.0000T
DSC1001BL5-058.9824T
DSC1001BE1-060.0000T
DSC1003BL3-030.0000T
DSC1003BL3-008.1920T
DSC1001BE3-022.1184T
DSC1003BL3-020.0000T
DSC1003BL3-032.7680T
DSC1003BL3-013.8420T
DSC1003BL3-025.0000T
DSC1003BL3-010.2400T
DSC1003BL3-018.4320T
DSC1001BL5-032.0000T
DSC1001BE5-030.6400T
DSC1001BL5-106.2500T
DSC1001BL2-125.0000T
DSC1004BL2-025.0000T

DSC1004BL2-024.0000T
DSC1001BE1-004.0625T
DSC1001BE1-004.0960T
DSC1001BL2-012.0000T
DSC1001BE5-027.0000T
DSC1001BE5-030.0000T
DSC1001BE1-033.3333T
DSC1001BL2-012.5000T
DSC1001BL3-001.0000T
DSC1001BE1-033.3330T
DSC1001BE1-020.0000T
DSC1001DE1-024.0000T
DSC1001BL2-020.0000T
DSC1001BL1-060.0000T
DSC1001BE2-012.2880T
DSC1001BE2-014.7450T
DSC1001BE1-001.8432T
DSC1001BE1-026.0000T
DSC1001BE2-048.0000T
DSC1001BE1-014.3182T
DSC1001BE1-014.7456T
DSC1001BE2-014.7456T
DSC1001BE1-133.0000T
DSC1001BL5-001.1385T
DSC1001BL5-001.1386T
DSC1001BL5-001.1387T
DSC1001BL5-001.1388T
DSC1001BL5-001.1389T
DSC1001BL5-108.0000T
DSC1001BE5-020.0000T
DSC1001BL5-033.3330T
DSC1001BL5-026.7000T
DSC1001BL5-026.6500T
DSC1001BE5-016.0000T
DSC1001BL2-048.0000T
DSC1001BL2-026.0000T
DSC1003BE1-025.0000T
DSC1001BL5-026.0000T
DSC1001BL5-120.0000T
DSC1001BL5-014.7456T
DSC1001BL5-033.0000T
DSC1001BE2-090.0000T
DSC1001BL2-024.0000T
DSC1001BL5-125.0000T
DSC1001BE5-024.0000T
DSC1001BL5-030.0000T
DSC1001BE1-066.6666T
DSC1001BL5-049.5000T
DSC1001BE1-001.4850T

DSC1003BL1-010.0000T
DSC1001CI2-029.5000T
DSC1001CI5-026.6000T
DSC1004CI5-025.0000T
DSC1004CI5-026.6000T
DSC1001CI5-099.9990T
DSC1001CI2-024.9600T
DSC1003CI1-025.0000T
DSC1001CI2-015.3600T
DSC1001CI1-012.8000T
DSC1001CI3-048.0000T
DSC1001CI3-114.2850T
DSC1001CI2-062.5000T
DSC1001CI1-032.0000T
DSC1001CI1-014.3181T
DSC1001CI5-075.0000T
DSC1003CI2-008.0000T
DSC1001CI3-148.5000T
DSC1001CI5-045.1584T
DSC1001CI5-049.1520T
DSC1001CI1-038.4000T
DSC1001CI3-033.3333T
DSC1003CI3-125.0063T
DSC1001CI3-125.0063T
DSC1001CI5-045.1850T
DSC1001CI2-010.0000T
DSC1001CI1-029.4912T
DSC1001CI5-005.0000T
DSC1001CI5-045.1854T
DSC1001CI2-009.6000T
DSC1004CI1-063.2200T
DSC1001CI1-033.3300T
DSC1001BI1-008.0000T
DSC1001BI1-010.0000T
DSC1001BI1-032.0000T
DSC1001BI1-022.1184T
DSC1001BI1-024.0000T
DSC1001BI1-024.5760T
DSC1001BI1-025.0000T
DSC1001BI1-027.0000T
DSC1001BI1-030.0000T
DSC1001BI1-040.0000T
DSC1001BI1-048.0000T
DSC1001BI1-050.0000T
DSC1001BI1-060.0000T
DSC1001BI1-125.0000T
DSC1001BI2-001.8432T
DSC1001BI2-002.0480T
DSC1001BI2-005.5296T

DSC1001BI2-006.0000T
DSC1001BI2-008.0000T
DSC1001BI2-012.0000T
DSC1001BI2-012.2880T
DSC1001BI2-014.7456T
DSC1001BI2-016.0000T
DSC1001BI2-016.3840T
DSC1001BI2-020.0000T
DSC1001BI2-020.0016T
DSC1001BI2-022.5790T
DSC1001BI2-024.0000T
DSC1001BI2-024.5760T
DSC1001BI2-025.0000T
DSC1001BI2-007.3728T
DSC1001BI2-027.0000T
DSC1001BI2-028.8000T
DSC1001BI2-032.0000T
DSC1001BI2-033.3330T
DSC1001BI2-040.0000T
DSC1001BI2-042.5000T
DSC1001BI2-044.0000T
DSC1001BI2-048.0000T
DSC1001BI2-049.0908T
DSC1001BI2-050.0000T
DSC1001BI2-059.0000T
DSC1001BI2-062.5000T
DSC1001BI2-080.0000T
DSC1001BI2-100.0000T
DSC1001BI2-106.2500T
DSC1001BI2-125.0000T
DSC1001BI2-133.0000T
DSC1001BI2-148.5000T
DSC1001BI5-003.6864T
DSC1001BI5-004.0000T
DSC1001BI5-007.3728T
DSC1001BI5-008.0000T
DSC1001DE1-026.0000T
DSC1001DE1-027.0000T
DSC1001DE1-048.0000T
DSC1001DE1-054.0000T
DSC1001DE1-100.0000T
DSC1001DE1-125.0000T
DSC1001DE2-020.0000T
DSC1001DE2-024.0000T
DSC1001DE2-050.0000T
DSC1001DL1-008.0000T
DSC1001DE5-019.2000T
DSC1001DL1-025.0000T
DSC1001DL1-027.0000T

DSC1001DL2-012.0000T
DSC1001DL2-008.0000T
DSC1001DL2-020.0000T
DSC1001DL2-025.0000T
DSC1001DL2-027.0000T
DSC1001DL2-030.0000T
DSC1001DL2-032.0000T
DSC1001DL2-050.0000T
DSC1001DL5-001.8432T
DSC1001DL5-002.0000T
DSC1001DL5-007.3728T
DSC1001DL5-008.0000T
DSC1001DL5-010.0000T
DSC1001DL5-011.0592T
DSC1001DL5-016.0000T
DSC1001DL5-019.2000T
DSC1001DL5-020.0000T
DSC1001DL5-024.0000T
DSC1001DL5-024.5760T
DSC1001DL5-025.0000T
DSC1001DL5-026.0000T
DSC1001DL5-027.0000T
DSC1001DL5-030.0000T
DSC1001DL5-031.2500T
DSC1001DL5-033.0000T
DSC1001DL5-033.3330T
DSC1001DL5-048.0000T
DSC1001DL5-050.0000T
DSC1001DL5-048.0000D
DSC1003DL5-100.0000T
DSC1001CI2-016.0000T
DSC1001CI2-024.0000T
DSC1001CI2-024.5760T
DSC1001CI2-025.0000T
DSC1001CI2-026.0000T
DSC1001CI2-027.0000T
DSC1001CI2-027.6000T
DSC1001CI2-028.6363T
DSC1001CI2-080.0000T
DSC1001CI2-032.7680T
DSC1001CI2-033.0000T
DSC1001CI2-033.3300T
DSC1001CI2-033.3333T
DSC1001CI2-034.3000T
DSC1001CI2-036.0000T
DSC1001CI5-032.7680T
DSC1001CI2-037.1250T
DSC1001CI2-040.0000T
DSC1001CI2-048.0000T

DSC1001CI2-050.0000T
DSC1001CI2-054.0000T
DSC1001CI2-060.0000T
DSC1003CI5-020.0000T
DSC1001CI2-066.6660T
DSC1001CI2-066.6666T
DSC1001CI2-074.2500T
DSC1003CI1-050.0000T
DSC1001CI2-100.0000T
DSC1001CI2-125.0000T
DSC1001CI4-002.0480T
DSC1001CI4-049.1520T
DSC1001CI4-054.0000T
DSC1001CI5-004.0000T
DSC1001CI5-004.9152T
DSC1001CI5-008.0000T
DSC1001CI5-010.0000T
DSC1001CI5-012.0000T
DSC1001CI5-012.2880T
DSC1001CI5-016.0000T
DSC1001CI5-018.4320T
DSC1001CI5-019.2000T
DSC1001CI5-020.0000T
DSC1001CI5-024.0000T
DSC1001CI5-024.5760T
DSC1001CI5-025.0000T
DSC1001CI5-026.0000T
DSC1001CI5-027.0000T
DSC1001CI5-030.0000T
DSC1001CI1-003.6864T
DSC1001CI2-012.5000T
DSC1001CI5-009.6000T
DSC1001CI1-100.0000T
DSC1001CI2-020.0000T
DSC1001CI2-006.0000T
DSC1001CI5-040.0000T
DSC1001CI5-044.0000T
DSC1001CI5-019.0000T
DSC1001CI5-060.0000T
DSC1001CI1-033.0000T
DSC1001CI1-048.0000T
DSC1001CI5-011.0592T
DSC1001CI2-031.2500T
DSC1001CI2-049.1520T
DSC1001CI2-032.0000T
DSC1001CI2-096.0000T
DSC1001CI2-100.0000B
DSC1001CI5-133.3330T
DSC1001CI5-070.4550T

DSC1001CI2-008.1920T
DSC1001CI2-010.4857T
DSC1001CI1-011.0592T
DSC1001CI2-001.9521T
DSC1001CI2-019.4400T
DSC1001CI2-026.000T
DSC1001CI2-133.0000T
DSC1001CI5-016.3840T
DSC1001CI5-033.3333T
DSC1001CI5-032.0000T
DSC1001CI5-033.0000T
DSC1001CI5-033.3330T
DSC1001CI2-030.0000T
DSC1001CI5-048.0000T
DSC1001CI5-050.0000T
DSC1001CI5-064.0000T
DSC1001CI5-100.0000T
DSC1001CI5-125.0000T
DSC1001CI5-150.0000T
DSC1004CI2-027.0000T
DSC1004CI2-033.0000T
DSC1004CI2-054.0000T
DSC1001CI5-080.0000T
DSC1004CI5-050.0000T
DSC1004CI5-125.0000T
DSC1001CI1-060.0000T
DSC1001CI2-007.3728T
DSC1001CI2-044.2360T
DSC1003CI5-025.0000T
DSC1001CI1-033.3330T
DSC1001CI2-066.6666B
DSC1004CI5-016.0000T
DSC1001CI2-072.0000T
DSC1001CI2-028.3220T
DSC1001CI2-108.0000T
DSC1001CI2-043.0000T
DSC1001CI1-012.0000T
DSC1001CI2-019.2000T
DSC1001CI2-038.4000T
DSC1001CI2-052.0000T
DSC1001CI2-025.0000B
DSC1003CI2-025.0000T
DSC1003CI2-050.0000T
DSC1001CI2-001.9512T
DSC1001CI2-033.3330T
DSC1001CI5-024.3050T
DSC1001CI5-033.3300T
DSC1001CI5-014.3181T
DSC1001CI5-026.8000T

DSC1001CI2-026.8000T
DSC1001CI2-010.4858T
DSC1004CI2-098.3040T
DSC1001CI1-031.9488T
DSC1003CI5-099.7200T
DSC1001DL5-075.0000T
DSC1001DL5-080.0000T
DSC1001DL5-100.0000B
DSC1001DL5-100.0000T
DSC1001DL5-125.0000T
DSC1003DL2-008.0000T
DSC1003DL2-050.0000T
DSC1003DL2-090.0000T
DSC1003DL2-148.5000T
DSC1003DL5-020.0000T
DSC1003DL5-125.0000T
DSC1001DE1-012.0000T
DSC1001DL5-015.3600T
DSC1003DL2-070.0000T
DSC1001DL5-010.2000T
DSC1001DL2-037.1250T
DSC1001DE1-040.0000T
DSC1001DE1-050.0000T
DSC1001DL2-150.0000T
DSC1001DL2-090.0000T
DSC1001DL5-012.0000T
DSC1003DL5-148.5000T
DSC1001DL5-004.0000T
DSC1001DE1-025.0000T
DSC1001DL5-133.3330T
DSC1001DL1-010.0000T
DSC1001DL2-072.0000T
DSC1003DL2-100.0000T
DSC1001DL2-087.0655T
DSC1001DL5-060.0000T
DSC1001DL1-037.1250
DSC1001DL1-080.0000T
DSC1001DL2-074.2500T
DSC1001DL5-014.7456T
DSC1003DE1-050.0000T
DSC1003DL1-125.0000T
DSC1003DL2-025.0000T
DSC1003DL5-025.0000T
DSC1001DL1-024.0000T
DSC1001DL2-040.0000T
DSC1001DL1-001.8432T
DSC1001DL2-001.8432T
DSC1001DL2-033.3333T
DSC1001DL1-033.3333T

DSC1001DE1-075.0000T
DSC1001DI2-011.0592
DSC1003DI2-027.1200
DSC1001CE1-037.1250
DSC1001CE1-060.0000
DSC1001CE1-064.8000
DSC1001CE1-069.2480
DSC1001CE2-001.8432
DSC1001CE2-006.0000
DSC1001CE2-010.0000
DSC1001CE2-020.0000
DSC1001CE2-024.0000
DSC1001CE2-024.5760
DSC1001CE2-025.0000
DSC1001CE2-027.0000
DSC1001CE2-034.0000
DSC1001CE2-040.0000
DSC1001CE2-048.0000
DSC1001CE2-050.0000
DSC1001CL1-001.8432
DSC1001CL1-016.0000
DSC1001CL1-020.0000
DSC1001DE1-024.3050T
DSC1001DL2-002.0000T
DSC1001DL1-004.0960T
DSC1001DL2-049.1520T
DSC1001DL2-045.1584T
DSC1001DE5-037.4000T
DSC1001DL5-096.0000T
DSC1001DL2-066.0000T
DSC1003DL5-019.2000T
DSC1001DE5-012.0000T
DSC1001DL2-026.0000T
DSC1001DL2-019.2000T
DSC1003DL1-033.3333T
DSC1003DL1-024.5454T
DSC1004DL2-072.0000T
DSC1001DL1-033.3300T
DSC1001DE2-120.0000T
DSC1004DL2-025.0000T
DSC1000DL3-PROGT
DSC1001DI1-072.0000T
DSC1001DI1-030.0000T
DSC1001DI1-050.0000B
DSC1001DI5-150.0000T
DSC1004DI2-010.0000T
DSC1001DI1-032.0000T
DSC1001DI2-014.7456T
DSC1003DI2-100.0000T

DSC1001DI2-028.6363T
DSC1001DI2-031.2500T
DSC1004DI2-016.0000T
DSC1001DI5-003.6864T
DSC1001DI5-004.0000T
DSC1001DI5-006.0000T
DSC1001DI5-007.3728T
DSC1001DI5-008.0174T
DSC1001DI5-008.1920T
DSC1001DI5-010.0000T
DSC1001DI5-012.0000T
DSC1001DI5-016.0000T
DSC1001DI5-019.2000T
DSC1001DI5-020.0000T
DSC1001DI5-024.0000T
DSC1001DI5-024.5760T
DSC1001DI5-025.0000T
DSC1001DI5-026.0000T
DSC1001DI5-027.0000T
DSC1001DI5-028.6363T
DSC1001DI5-029.4912T
DSC1001DI5-032.0000T
DSC1001DI5-033.3330T
DSC1001DI5-001.8432T
DSC1001DI2-018.0000T
DSC1001DI5-044.0000T
DSC1001DI5-048.0000T
DSC1001DI5-050.0000T
DSC1001DI5-060.0000T
DSC1001DI5-075.0000T
DSC1001DI5-080.0000T
DSC1001DI5-100.0000T
DSC1001DI5-125.0000T
DSC1001DI1-074.2500T
DSC1004DI1-024.0000T
DSC1001DL5-032.0000T
DSC1004DI2-072.0000T
DSC1004DI5-010.0000T
DSC1001DI1-054.0000T
DSC1004DI5-066.4860T
DSC1004DI5-066.5800T
DSC1001DI2-006.7800T
DSC1001DI2-054.0000T
DSC1001DI5-047.3385T
DSC1001DI5-038.4000T
DSC1001DI1-060.0000T
DSC1001DI2-030.0000T
DSC1001DI2-001.8432T
DSC1001CE1-020.0000T

DSC1001CE1-020.8300T
DSC1001CE1-024.0000T
DSC1001CE1-024.5760T
DSC1001CE1-025.0000T
DSC1001CE2-001.8432T
DSC1001CE1-033.8688T
DSC1001CE1-048.0000T
DSC1001CE2-024.0000T
DSC1001CE1-069.2480T
DSC1001CE1-086.5600T
DSC1001CE2-025.0000T
DSC1001CE2-011.2896T
DSC1001CE2-050.0000T
DSC1001CE2-026.0000T
DSC1001CE2-027.0000T
DSC1001CE2-032.1100T
DSC1001CE2-033.0000T
DSC1001CL1-020.0000T
DSC1001CE2-037.1250T
DSC1001CE2-040.0000T
DSC1001CL1-016.0000T
DSC1001CL1-025.0000T
DSC1001CE2-054.0000T
DSC1001CE2-074.2500T
DSC1001CE2-100.0000T
DSC1001CL1-125.0000T
DSC1001CL2-012.0000T
DSC1001CL2-020.0000T
DSC1001CL2-022.5972T
DSC1001CL1-030.0000T
DSC1001CL1-033.0000T
DSC1001CL1-025.0000
DSC1001CL1-030.0000
DSC1001CL1-032.0000
DSC1001CE2-100.0000
DSC1001CL1-066.0000
DSC1001CL1-125.0000
DSC1001CL2-009.5290
DSC1001CL2-012.0000
DSC1001CL2-020.0000
DSC1001CL2-022.5972
DSC1001CL2-024.0000
DSC1001CL2-025.0000
DSC1001CL1-033.0000
DSC1001CL2-027.0000
DSC1001CL2-033.3333
DSC1001CL2-037.1250
DSC1001CL2-050.0000
DSC1001CL2-004.0000

DSC1001CL5-020.0000
DSC1001CL5-025.0000
DSC1001CL5-026.0000
DSC1001CL5-027.0000
DSC1001CL5-027.1200
DSC1001CL5-032.0000
DSC1001CL5-033.3330
DSC1001CL5-040.0000
DSC1001CL5-125.0000
DSC1001CL5-008.0000
DSC1001CL5-150.0000
DSC1001CL5-28.63636
DSC1001CL5-012.0000
DSC1001CL5-024.0000
DSC1004CE1-050.0000
DSC1004CE2-072.0000
DSC1001CL5-050.0000
DSC1001CL5-033.0000
DSC1001CL5-060.0000
DSC1001CL5-114.0000
DSC1001CL1-100.0000
DSC1001CL5-014.7456
DSC1001CL5-016.0000
DSC1001CL5-014.3181
DSC1001CL5-010.0000
DSC1001CE1-125.0000
DSC1001CE5-148.0000
DSC1001CE2-032.1100
DSC1001CE1-022.1184
DSC1001CL2-040.0000
DSC1003CL2-066.0000
DSC1001CL5-080.0000
DSC1001CL5-100.0000
DSC1001CE2-012.2880
DSC1001CE2-003.5800
DSC1001CL1-001.6000
DSC1001CE1-027.0000
DSC1001CE5-148.5000
DSC1001CE2-022.5792
DSC1001CL1-033.3333
DSC1001CL1-048.0000
DSC1001CE1-110.0000
DSC1001CE1-032.0000
DSC1001CL3-024.0000
DSC1001CL3-072.0000
DSC1001CE2-019.2000
DSC1001CE2-108.0000
DSC1001CE3-005.0000
DSC1001CL2-048.0000

DSC1001CL2-090.0000
DSC1001CE2-064.0000
DSC1001CL3-008.0000
DSC1001CL1-012.0000
DSC1001CL2-022.5792
DSC1001CL5-007.3728
DSC1001CL5-028.0000
DSC1004CL2-003.2768
DSC1001CL1-008.0000
DSC1001CL2-026.0000
DSC1001CL5-064.0000
DSC1001CE2-013.5600
DSC1001CE5-032.2123
DSC1001CE1-048.0000
DSC1001CL2-006.0052
DSC1001CL1-040.0000
DSC1003CL1-020.0000
DSC1001CL1-006.0053
DSC1001CL3-025.0000
DSC1001CL2-006.0053
DSC1001CE2-033.3333
DSC1001CL3-040.0000
DSC1004CL2-030.0000
DSC1001CE1-004.8500
DSC1001CE3-032.0000
DSC1001CE3-064.0000
DSC1001CE1-002.0800
DSC1001CE1-016.0000
DSC1001CE1-120.0000
DSC1003CL3-133.3330
DSC1001CL2-080.0000
DSC1001CE1-003.5000
DSC1001CL2-120.0000
DSC1001CE2-075.0000
DSC1001CE3-024.0000
DSC1001CL2-066.6666
DSC1001CL2-060.0000
DSC1001CL3-006.1440
DSC1001CL1-027.0000
DSC1001BE1-025.0000
DSC1001BE1-040.0000
DSC1001BE1-048.0000
DSC1001BE1-024.0000
DSC1001BE1-125.0000
DSC1001BE2-024.0000
DSC1001BE2-025.0000
DSC1001BE2-027.0000
DSC1001BE2-033.3330
DSC1001BE2-050.0000

DSC1001BE2-100.0000
DSC1001BL1-002.1760
DSC1001BL2-050.0000
DSC1001BL5-010.0000
DSC1001BL5-100.0000
DSC1001BL5-025.0000
DSC1001BL2-025.0000
DSC1001BL5-050.0000
DSC1001BL5-016.0000
DSC1001BL5-080.0000
DSC1001BE1-050.0000
DSC1001BE5-022.5792
DSC1001BE2-001.6000
DSC1001BE1-012.0000
DSC1001BE2-010.0000
DSC1001BL5-095.0000
DSC1001BL1-016.0000
DSC1001BE5-064.0000
DSC1001BL5-064.0000
DSC1001BL2-020.0000
DSC1001BL1-060.0000
DSC1001BE2-012.2880
DSC1001BE2-014.7450
DSC1001BE1-001.8432
DSC1001BE1-026.0000
DSC1001BE2-048.0000
DSC1001BE1-014.3182
DSC1001BE1-014.7456
DSC1001BE2-014.7456
DSC1001BE1-133.0000
DSC1001BL5-001.1385
DSC1001BL5-001.1386
DSC1001BL5-001.1387
DSC1001BL5-001.1388
DSC1001BL5-001.1389
DSC1001BL5-108.0000
DSC1001BE5-020.0000
DSC1001BL5-033.3330
DSC1001BL5-026.7000
DSC1001BL5-026.6500
DSC1001BE5-016.0000
DSC1001BL2-048.0000
DSC1001BL2-026.0000
DSC1003BE1-025.0000
DSC1001BL5-026.0000
DSC1001BL5-120.0000
DSC1001BL5-014.7456
DSC1001BL5-033.0000
DSC1001BE2-090.0000

DSC1001BL2-024.0000
DSC1001BL5-125.0000
DSC1001BE5-024.0000
DSC1001BL5-030.0000
DSC1001BE1-066.6666
DSC1001BL5-049.5000
DSC1001BE1-001.4850
DSC1003BL1-010.0000
DSC1001BL5-072.0000
DSC1001BL5-066.0000
DSC1000BL3-PROG
DSC1000BL5-PROG
DSC1001BE5-033.3330
DSC1001BL5-075.0000
DSC1001DL2-040.0000
DSC1001DL1-001.8432
DSC1001DL2-001.8432
DSC1001DL1-033.3333
DSC1001DE1-075.0000
DSC1001DE2-100.0000
DSC1001DL2-016.0000
DSC1001DL1-025.2000
DSC1004DL5-040.0000
DSC1001DE1-033.3333
DSC1001DL5-040.0000
DSC1001DE1-019.2000
DSC1001DL2-007.3728
DSC1001DL5-072.0000
DSC1003DL2-080.0000
DSC1001DL5-012.2880
DSC1003DL1-027.0000
DSC1004DL1-027.0000
DSC1001DE2-038.4000
DSC1001DE1-013.0000
DSC1001DL2-012.2880
DSC1001DL2-125.0000
DSC1001DL2-004.0000
DSC1001DL1-016.0000
DSC1001DL2-023.0000
DSC1001DE1-020.0000
DSC1001DL2-026.6500
DSC1001DL5-014.3181
DSC1001DE2-008.0000
DSC1001DE2-012.0000
DSC1001DE2-027.0000
DSC1001DE2-025.0000
DSC1001DL5-016.7722
DSC1004DL1-025.0000
DSC1004DL1-033.0000

DSC1001DL2-048.0000
DSC1001DL2-066.6700
DSC1001DE1-024.3050
DSC1001DL2-002.0000
DSC1001DL1-004.0960
DSC1001DL2-049.1520
DSC1001DL2-045.1584
DSC1001DE5-037.4000
DSC1001DL5-096.0000
DSC1001DL2-066.0000
DSC1003DL5-019.2000
DSC1001DE5-012.0000
DSC1001DL2-026.0000
DSC1001DL2-019.2000
DSC1003DL1-033.3333
DSC1003DL1-024.5454
DSC1004DL2-072.0000
DSC1001DL1-033.3300
DSC1001DE2-120.0000
DSC1004DI1-006.7800T
DSC1001DI5-018.4320T
DSC1001DI1-018.4320T
DSC1001DI2-004.0000T
DSC1001DI1-004.9152T
DSC1001DI2-045.1584T
DSC1001DI2-049.1520T
DSC1001DI2-011.0592T
DSC1003DI2-027.1200T
DSC1001DI2-032.7680T
DSC1001DI1-016.6666T
DSC1001DI5-087.0655T
DSC1001DI1-045.1584T
DSC1001DI5-025.6000T
DSC1001DI1-045.5840T
DSC1001DI1-013.3300T
DSC1001DI2-003.0720T
DSC1001DI2-057.2727T
DSC1003DI2-013.5288T
DSC1001DI2-096.0000T
DSC1001DI2-023.0000T
DSC1001DI5-054.0000T
DSC1001DI1-029.4912T
DSC1001DI5-013.5288T
DSC1004DI2-133.0000T
DSC1004DI1-050.0000T
DSC1001DI1-007.3728T
DSC1001DI1-080.0000T
DSC1001DI1-002.0000T
DSC1001DI2-064.0000T

DSC1001DI3-024.0000T
DSC1003DI2-024.5670T
DSC1001DI5-032.7680T
DSC1001DI1-011.0592T
DSC1001DI3-012.0000T
DSC1001DI2-033.0000T
DSC1003DI5-025.0000T
DSC1001DI5-011.0592T
DSC1001DI2-133.0000T
DSC1003DI1-012.0000T
DSC1001DI2-002.0970T
DSC1001DI3-100.0000T
DSC1001DI3-133.0000T
DSC1001DI1-064.0000T
DSC1001DI5-019.6800T
DSC1001DI1-025.0008T
DSC1001DI5-090.0000T
DSC1001DI5-014.3181T
DSC1001DI1-116.6666T
DSC1001DI2-066.6670T
DSC1003DI2-050.0000T
DSC1004DI2-050.0000T
DSC1003DI1-052.0000T
DSC1001DI5-009.2160T
DSC1001DI2-060.0000T
DSC1001DI5-005.0196T
DSC1001DI5-037.4000T
DSC1001DI1-028.6363T
DSC1001DI3-012.2880T
DSC1004DI5-024.0000T
DSC1004DI5-016.0000T
DSC1001DI3-040.0000T
DSC1004DI1-026.0000T
DSC1001DI2-070.0000T
DSC1001DI3-060.0000T
DSC1001DI5-057.5580T
DSC1003DI2-024.0000T
DSC1003DI2-033.3333T
DSC1004DI2-076.0000T
DSC1001DI1-036.0000T
DSC1001DI1-038.0000T
DSC1001DI5-030.7200T
DSC1001DI3-027.0000T
DSC1001DI2-014.3181T
DSC1001DI5-040.0000T
DSC1001DI1-069.1200T
DSC1001DI5-032.4000T
DSC1001DI5-041.1420T
DSC1001DI5-014.7456T

DSC1001DI2-036.0000T
DSC1001DI2-024.0004T
DSC1003DI5-050.0000T
DSC1001DI2-033.3330T
DSC1001DI1-028.6360T
DSC1001DI2-019.6608T
DSC1001DI5-038.8800T
DSC1001DI2-001.2000T
DSC1001DI2-085.0000T
DSC1001DI1-044.0000T
DSC1001DI1-150.0000T
DSC1001DI2-006.1400T
DSC1001DI1-040.0000T
DSC1001BI2-001.5440
DSC1001BI1-033.0000
DSC1001BI1-133.0000
DSC1004DL2-025.0000
DSC1000DL3-PROG
DSC1000DL5-PROG
DSC1001DL2-054.0000
DSC1001DL3-027.0000
DSC1001DL3-024.0000
DSC1001DL5-016.3840
DSC1001DL2-016.3690
DSC1001DL2-061.2500
DSC1003DL2-033.3333
DSC1001DL5-018.4320
DSC1001DL5-033.3333
DSC1001DL2-003.6864
DSC1001DL5-003.6864
DSC1001DE2-001.0000
DSC1001DE2-090.0000
DSC1004DL5-025.0000
DSC1001DE2-022.0000
DSC1001DL5-037.1250
DSC1001DL5-150.0000
DSC1001DL2-033.3300
DSC1001DE5-025.0000
DSC1001DE1-024.5760
DSC1001DL5-047.0016
DSC1001DL1-005.0196
DSC1001DL2-005.0196
DSC1001DL5-005.0196
DSC1001DE3-080.0000
DSC1001DL1-150.0000
DSC1001DE3-008.0000
DSC1001DE5-150.0000
DSC1003DL1-025.0000
DSC1003DL1-016.0000

DSC1003DL1-050.0000
DSC1003DL1-048.0000
DSC1003DL2-024.0000
DSC1004DE1-026.0000
DSC1001DL1-050.0000
DSC1001DE5-049.1520
DSC1001DI2-066.0000T
DSC1001DI5-133.3330T
DSC1001BI2-022.8000
DSC1001BI2-024.0000
DSC1001BI2-025.0000
DSC1001BI2-040.0000
DSC1001BI5-040.0000
DSC1001BI2-033.3330
DSC1001BI2-042.5000
DSC1001BI2-048.0000
DSC1001BI2-050.0000
DSC1001BI2-008.0000
DSC1001BI2-002.0480
DSC1001BI2-100.0000
DSC1001BI2-125.0000
DSC1001BI2-133.0000
DSC1001BI5-010.0000
DSC1001BI2-024.5760
DSC1001BI5-025.0000
DSC1001BI2-007.3728
DSC1001BI2-027.0000
DSC1001BI5-050.0000
DSC1001BI5-100.0000
DSC1001BI5-125.0000
DSC1004BI2-033.0000
DSC1004BI2-100.0000
DSC1001BI1-038.4000
DSC1001BI2-148.5000
DSC1001BI5-008.0000
DSC1001BI5-016.0000
DSC1001BI5-024.0000
DSC1001BI5-032.0000
DSC1001BI1-008.0000
DSC1001BI2-018.4320
DSC1001BI5-020.0000
DSC1001BI5-133.3330
DSC1001BI1-004.0000
DSC1001BI2-030.0000
DSC1001BI2-016.3840
DSC1001BI1-012.2880
DSC1001BI1-022.1184
DSC1001BI1-024.0000
DSC1001BI1-024.5760

DSC1001BI1-025.0000
DSC1001BI1-040.0000
DSC1001BI1-125.0000
DSC1001BI2-014.7456
DSC1001BI2-020.0000
DSC1001BI2-014.3181
DSC1001BI1-020.0000
DSC1001BI5-090.0000
DSC1004BI2-010.0000
DSC1001BI1-066.6666
DSC1001BI2-133.3330
DSC1001BI2-012.5000
DSC1001BI5-013.5600
DSC1001BI1-100.0000
DSC1001BI1-012.0000
DSC1001BI2-033.0000
DSC1001BI2-006.0000
DSC1001BI2-026.0000
DSC1001BI5-084.0000
DSC1001BI1-033.3330
DSC1001BI2-012.2888
DSC1001BI2-004.0000
DSC1003BI2-025.0000
DSC1001BI2-010.0000
DSC1001BI2-013.0810
DSC1003BI1-008.0000
DSC1001BI2-054.0000
DSC1001BI5-014.7456
DSC1001BI2-028.6363
DSC1001BI5-033.0000
DSC1001BI2-016.9344
DSC1004BI5-016.0000
DSC1001BI5-027.0000
DSC1001BI1-080.0000
DSC1001BI1-019.6608
DSC1001BI5-028.6363
DSC1001BI5-001.6000
DSC1003BI5-001.7000
DSC1001BI1-001.8432
DSC1001BI5-125.0031
DSC1001BI1-011.0592
DSC1001BI5-080.0000
DSC1003BI5-001.6500
DSC1003BI1-100.0000
DSC1001BI1-026.0000
DSC1001BI3-024.0000
DSC1001BI3-012.0000
DSC1001BI5-018.4320
DSC1001BI2-029.4912

DSC1001BI3-033.0000
DSC1001BI3-050.0000
DSC1003DI2-033.3333
DSC1004DI2-076.0000
DSC1001DI1-036.0000
DSC1001DI1-038.0000
DSC1001DI5-030.7200
DSC1001DI3-027.0000
DSC1001DI2-014.3181
DSC1001DI5-040.0000
DSC1001DI1-069.1200
DSC1001DI5-032.4000
DSC1001DI5-041.1420
DSC1001DI5-014.7456
DSC1001DI2-036.0000
DSC1001DI2-024.0004
DSC1003DI5-050.0000
DSC1001DI2-033.3330
DSC1001DI1-028.6360
DSC1001DI2-019.6608
DSC1001DI5-038.8800
DSC1001DI2-001.2000
DSC1001DI2-085.0000
DSC1001DI1-044.0000
DSC1001DI1-150.0000
DSC1001DI2-006.1400
DSC1001DI1-040.0000
DSC1001CE1-004.0000
DSC1001CE1-012.2880
DSC1001CE1-012.0000
DSC1001CE1-014.3182
DSC1001CE1-019.6608
DSC1001CE1-024.0000
DSC1001CE1-024.5760
DSC1001CL1-066.0000T
DSC1001CL2-050.0000T
DSC1001CL2-004.0000T
DSC1001CL2-025.0000T
DSC1001CL2-027.0000T
DSC1001CL2-033.3000T
DSC1001CL5-040.0000T
DSC1001CL5-001.8432T
DSC1003BI5-040.0000
DSC1001BI2-011.0592
DSC1001BI5-019.6800
DSC1001BI1-003.6864
DSC1004BI5-121.5000
DSC1001BI2-003.1250
DSC1001BI5-066.6660

DSC1004BI5-005.0000
DSC1001BI1-099.0000
DSC1001BI2-099.0000
DSC1001BI5-040.9600
DSC1001BI2-003.6864
DSC1001BI3-020.0000
DSC1001BI2-040.6800
DSC1001BI2-033.3300
DSC1001BI3-022.5792
DSC1001BI3-024.5760
DSC1001BI2-048.4610
DSC1001BI5-024.5760
DSC1001BI5-150.0000
DSC1001BI2-027.1200
DSC1001BI2-060.0000
DSC1001DI5-133.0000T
DSC1001DI1-001.8432
DSC1001DI1-003.6864
DSC1001DI1-005.0000
DSC1001DI1-004.0000
DSC1001DI1-010.0000
DSC1001DI1-012.0000
DSC1001DI1-013.3333
DSC1001DI1-014.7456
DSC1001DI1-016.3840
DSC1001DI1-020.0000
DSC1001DI1-024.0000
DSC1001DI1-008.0000
DSC1001DI1-025.0000
DSC1001DI1-026.0000
DSC1001DI1-024.5760
DSC1001DI1-033.3300
DSC1001DI1-033.3330
DSC1001DI1-033.3333
DSC1001DI1-048.0000
DSC1001DI1-050.0000
DSC1001DI1-072.0000
DSC1001DI1-098.3040
DSC1001DI1-100.0000
DSC1001DI1-125.0000
DSC1001DI1-133.0000
DSC1001DI2-001.0000
DSC1001DI2-003.6864
DSC1001DI2-005.0196
DSC1001DI2-005.3125
DSC1001DI2-008.0000
DSC1001DI2-009.6000
DSC1001DI2-012.0000
DSC1001DI2-014.7456

DSC1001DI2-016.0000
DSC1001DI2-019.2000
DSC1001DI2-020.0000
DSC1001DI2-024.0000
DSC1001DI2-024.5760
DSC1001DI2-025.0000
DSC1001DI2-026.0000
DSC1001DI2-027.0000
DSC1001DI2-032.0000
DSC1001DI2-033.3300
DSC1001DI2-033.3333
DSC1001DI2-037.1250
DSC1001DI2-022.0000
DSC1001DI2-038.4000
DSC1001DI2-048.0000
DSC1001DI2-024.5455
DSC1001DI2-050.0000
DSC1001DI2-066.6600
DSC1001DI2-022.5792
DSC1001DI2-080.0000
DSC1001DI2-086.4000
DSC1001DI2-100.0000
DSC1001DI2-125.0000
DSC1001DI2-040.0000
DSC1001DI5-002.4576
DSC1001DI5-007.3728
DSC1001DI5-012.0000
DSC1001DI5-016.0000
DSC1001DI5-019.2000
DSC1001DI5-020.0000
DSC1001DI5-025.0000
DSC1001DI5-026.0000
DSC1001DI5-027.0000
DSC1001DI2-072.0000
DSC1001DI2-074.2500
DSC1001DI5-032.2500
DSC1001DI5-033.3333
DSC1001DI5-038.4000
DSC1001DI5-100.0000
DSC1001DI5-125.0000
DSC1001DI5-133.0000
DSC1001DI5-150.0000
DSC1004DI1-024.0000
DSC1004DI2-025.0000
DSC1001DI5-002.0480
DSC1001DI2-047.3885
DSC1001DI1-038.4000
DSC1001DI2-026.6000
DSC1001DI1-066.0000

DSC1001DI5-008.0000
DSC1001DI5-047.3885
DSC1001DI5-013.3333
DSC1001DI5-022.5792
DSC1001DI5-030.0000
DSC1001DI2-024.5454
DSC1001DI2-029.5000
DSC1001DI5-033.0000
DSC1004DI2-012.0000
DSC1003DI2-024.5760
DSC1001DI1-033.0000
DSC1001DI1-030.0000
DSC1001DI5-004.0000
DSC1004DI2-010.0000
DSC1001DI1-032.0000
DSC1003DI2-100.0000
DSC1001DI2-028.6363
DSC1001DI2-031.2500
DSC1001CI5-044.0000
DSC1001CI5-019.0000
DSC1001CI5-060.0000
DSC1001CI1-033.0000
DSC1001CI5-011.0592
DSC1001CI2-031.2500
DSC1001CI2-049.1520
DSC1001CI2-032.0000
DSC1001CI5-133.3330
DSC1001CI5-070.4550
DSC1001CI2-008.1920
DSC1001CI2-010.4857
DSC1001CI2-001.9521
DSC1001CI2-007.3728
DSC1001CI2-150.0000
DSC1001CI5-009.7280
DSC1001CI5-016.3840
DSC1001CI2-133.0000
DSC1001CI5-033.3333
DSC1003CI2-100.0000
DSC1001CI5-032.0000
DSC1001CI5-033.0000
DSC1001CI5-033.3330
DSC1001CI2-030.0000
DSC1001CI5-048.0000
DSC1001CI5-125.0000
DSC1004CI2-027.0000
DSC1004CI5-050.0000
DSC1001CI1-010.0000
DSC1001CI1-033.3330
DSC1004CI5-016.0000

DSC1001CI2-072.0000
DSC1001CI2-108.0000
DSC1001CI2-028.3220
DSC1001CI2-043.0000
DSC1001CI2-019.2000
DSC1001CI2-038.4000
DSC1001CI2-052.0000
DSC1003CI2-025.0000
DSC1003CI2-050.0000
DSC1001CI2-001.9512
DSC1001CI2-033.3330
DSC1001CI5-024.3050
DSC1001CI5-033.3300
DSC1001CI5-014.3181
DSC1001CI5-026.8000
DSC1001CI2-026.8000
DSC1001CI2-010.4858
DSC1004CI2-098.3040
DSC1001CI1-031.9488
DSC1003CI5-099.7200
DSC1001CI1-004.0000
DSC1001CI5-014.7456
DSC1001CI5-008.1920
DSC1001CI2-003.0720
DSC1003CI2-024.0000
DSC1003CI2-080.0000
DSC1003CI1-070.0000
DSC1001CI1-080.0000
DSC1001CI5-022.0000
DSC1001CI2-100.8000
DSC1003CI2-027.0000
DSC1001CI5-022.5792
DSC1001CI2-024.3050
DSC1001CI1-004.0960
DSC1001CI5-003.2768
DSC1001CI5-007.3728
DSC1001CI2-003.2768
DSC1001CI3-024.0000
DSC1001CI3-025.0000
DSC1001CI3-027.0000
DSC1001CI3-013.8240
DSC1001CI5-015.0000
DSC1001CI5-144.0000
DSC1001CI5-029.4912
DSC1001CI2-133.3330
DSC1001CI3-100.0000
DSC1001CI2-074.1750
DSC1001CI5-003.6864
DSC1004CI2-024.5760

DSC1001CI3-003.5790
DSC1001CI1-018.4320
DSC1001CI1-040.0000
DSC1001CI2-066.0000
DSC1001CI2-026.6363
DSC1001CI1-064.0000
DSC1001CI2-003.8000
DSC1001CI3-012.0000
DSC1001CI3-033.0000
DSC1003CI5-080.0000
DSC1001CI1-005.0000
DSC1001CI3-019.2000
DSC1001CI3-050.0000
DSC1001CI1-004.9152
DSC1003CI2-010.0000
DSC1004CI5-121.5000
DSC1001CI2-034.0000
DSC1001CI5-037.4000
DSC1004CI2-060.0000
DSC1001CI2-004.0960
DSC1001CI5-037.0879
DSC1001CI2-013.0000
DSC1001CE2-074.2500
DSC1004CI1-016.0000
DSC1001CI1-028.6363
DSC1001CI3-013.5000
DSC1001CI1-008.1920
DSC1001CI2-038.0000
DSC1001CI3-004.0000
DSC1004CI5-100.0000
DSC1001CI5-013.5000
DSC1001CI2-020.7500
DSC1003CI5-040.0000
DSC1001CI5-013.3300
DSC1003CI2-020.0000
DSC1001CI2-088.0000
DSC1001CI2-020.0036
DSC1001CI2-020.0037
DSC1001CI1-001.5000
DSC1001CI1-003.5800
DSC1001CI1-125.0000
DSC1001CI2-029.5000
DSC1001CI5-026.6000
DSC1004CI5-025.0000
DSC1004CI5-026.6000
DSC1001CI5-099.9990
DSC1001CI2-024.9600
DSC1003CI1-025.0000
DSC1001CI2-015.3600

DSC1001DE2-100.0000T
DSC1001DL2-016.0000T
DSC1001DL1-025.2000T
DSC1004DL5-040.0000T
DSC1001DE1-033.3333T
DSC1001DL5-040.0000T
DSC1001DE1-019.2000T
DSC1001DL2-007.3728T
DSC1001DL5-072.0000T
DSC1003DL2-080.0000T
DSC1001DL5-012.2880T
DSC1003DL1-027.0000T
DSC1004DL1-027.0000T
DSC1001DE2-038.4000T
DSC1001DE1-013.0000T
DSC1001DL2-012.2880T
DSC1001DL2-125.0000T
DSC1001DL2-004.0000T
DSC1001DL1-016.0000T
DSC1001DL2-023.0000T
DSC1001DE1-020.0000T
DSC1001DL2-026.6500T
DSC1001DL5-014.3181T
DSC1001DE2-008.0000T
DSC1001DE2-012.0000T
DSC1001DE2-027.0000T
DSC1001DE2-025.0000T
DSC1001DL5-016.7722T
DSC1004DL1-025.0000T
DSC1004DL1-033.0000T
DSC1001DL2-048.0000T
DSC1001DL2-066.6700T
DSC1001DI2-032.7680
DSC1001DI1-016.6666
DSC1001DI5-087.0655
DSC1001DI1-045.1584
DSC1001DI5-025.6000
DSC1001DI1-045.5840
DSC1001DI1-013.3300
DSC1001DI2-003.0720
DSC1001DI2-057.2727
DSC1003DI2-013.5288
DSC1001DI2-096.0000
DSC1001DI2-023.0000
DSC1001DI5-054.0000
DSC1001DI1-029.4912
DSC1001DI5-013.5288
DSC1004DI2-133.0000
DSC1004DI1-050.0000

DSC1001DI1-007.3728
DSC1001DI1-080.0000
DSC1001DI1-002.0000
DSC1001DI2-064.0000
DSC1001DI3-024.0000
DSC1003DI2-024.5670
DSC1001DI5-032.7680
DSC1001DI1-011.0592
DSC1001DI3-012.0000
DSC1001DI2-033.0000
DSC1003DI5-025.0000
DSC1001DI5-011.0592
DSC1001DI2-133.0000
DSC1003DI1-012.0000
DSC1001DI2-002.0970
DSC1001DI3-100.0000
DSC1001DI3-133.0000
DSC1001DI1-064.0000
DSC1001DI5-019.6800
DSC1001DI1-025.0008
DSC1001DI5-090.0000
DSC1001DI5-014.3181
DSC1001DI1-116.6666
DSC1001DI2-066.6670
DSC1003DI2-050.0000
DSC1004DI2-050.0000
DSC1003DI1-052.0000
DSC1001DI5-009.2160
DSC1001DI2-060.0000
DSC1001DI5-005.0196
DSC1001DI5-037.4000
DSC1001DI1-028.6363
DSC1001DI3-012.2880
DSC1004DI5-024.0000
DSC1004DI5-016.0000
DSC1001DI3-040.0000
DSC1004DI1-026.0000
DSC1001DI2-070.0000
DSC1001DI3-060.0000
DSC1001DI5-057.5580
DSC1003DI2-024.0000
DSC1001BI5-016.0000T
DSC1001BI5-024.0000T
DSC1001BI5-025.0000T
DSC1001BI5-032.0000T
DSC1001BI5-033.3330T
DSC1001BI5-040.0000T
DSC1001BI5-048.0000T
DSC1001BI5-050.0000T

DSC1001BI5-066.0000T
DSC1001BI5-066.6666T
DSC1001BI5-072.0000T
DSC1001BI5-100.0000T
DSC1001BI5-120.0000T
DSC1001BI5-125.0000T
DSC1003BI1-060.0000T
DSC1001BI5-030.0000T
DSC1001BI1-038.4000T
DSC1001BI2-018.4320T
DSC1001BI5-020.0000T
DSC1001BI5-133.3330T
DSC1001BI1-004.0000T
DSC1001BI2-030.0000T
DSC1001BI1-012.2880T
DSC1001BI2-014.3181T
DSC1001BI1-020.0000T
DSC1001BI5-090.0000T
DSC1004BI2-010.0000T
DSC1001BI1-066.6666T
DSC1001BI2-133.3330T
DSC1001BI1-016.0000T
DSC1001BI2-012.5000T
DSC1001BI5-013.5600T
DSC1001BI1-100.0000T
DSC1001BI1-012.0000T
DSC1001BI2-033.0000T
DSC1001BI2-026.0000T
DSC1001BI5-084.0000T
DSC1001BI1-033.3330T
DSC1001BI2-012.2888T
DSC1001BI2-004.0000T
DSC1003BI2-025.0000T
DSC1001BI2-010.0000T
DSC1001BI2-013.0810T
DSC1003BI1-008.0000T
DSC1001BI2-054.0000T
DSC1001BI5-014.7456T
DSC1001BI2-028.6363T
DSC1001BI5-033.0000T
DSC1001BI2-016.9344T
DSC1004BI5-016.0000T
DSC1001BI5-027.0000T
DSC1001BI1-080.0000T
DSC1001BI1-019.6608T
DSC1001BI5-028.6363T
DSC1001BI5-001.6000T
DSC1003BI5-001.7000T
DSC1001BI1-001.8432T

DSC1001BI5-125.0031T
DSC1001BI1-011.0592T
DSC1001BI5-080.0000T
DSC1003BI5-001.6500T
DSC1003BI1-100.0000T
DSC1001BI1-026.0000T
DSC1001BI3-024.0000T
DSC1001BI3-012.0000T
DSC1001BI5-018.4320T
DSC1001CL2-037.1250T
DSC1001CL2-033.3333T
DSC1003DI2-024.5760T
DSC1001DI1-033.0000T
DSC1001CI5-008.1920T
DSC1001CI2-003.0720T
DSC1003CI2-024.0000T
DSC1003CI2-080.0000T
DSC1003CI1-070.0000T
DSC1001CI1-080.0000T
DSC1001CI5-022.0000T
DSC1001CI2-100.8000T
DSC1003CI2-027.0000T
DSC1001CI5-022.5792T
DSC1001CI2-024.3050T
DSC1001CI1-004.0960T
DSC1001CI5-003.2768T
DSC1001CI5-007.3728T
DSC1001CI2-003.2768T
DSC1001CI3-024.0000T
DSC1001CI3-025.0000T
DSC1001CI3-027.0000T
DSC1001CI3-013.8240T
DSC1001CI5-015.0000T
DSC1001CI5-144.0000T
DSC1001CI5-029.4912T
DSC1001CI2-133.3330T
DSC1001CI3-100.0000T
DSC1001CI2-074.1750T
DSC1001CI5-003.6864T
DSC1004CI2-024.5760T
DSC1001CI3-003.5790T
DSC1001CI1-018.4320T
DSC1001CI1-040.0000T
DSC1001CI2-066.0000T
DSC1001CI2-026.6363T
DSC1001CI1-064.0000T
DSC1001CI2-003.8000T
DSC1001CI3-012.0000T
DSC1001CI3-033.0000T

DSC1003CI5-080.0000T
DSC1001CI1-005.0000T
DSC1001CI3-019.2000T
DSC1001CI3-050.0000T
DSC1001CI1-004.9152T
DSC1003CI2-010.0000T
DSC1004CI5-121.5000T
DSC1001CI2-034.0000T
DSC1001CI5-037.4000T
DSC1004CI2-060.0000T
DSC1001CI2-004.0960T
DSC1001CI5-037.0879T
DSC1001CI2-013.0000T
DSC1004CI1-016.0000T
DSC1001CI1-028.6363T
DSC1001CI3-013.5000T
DSC1001CI1-008.1920T
DSC1001CI2-038.0000T
DSC1001CI3-004.0000T
DSC1004CI5-100.0000T
DSC1001CI5-013.5000T
DSC1001CI2-020.7500T
DSC1003CI5-040.0000T
DSC1001CI5-013.3300T
DSC1003CI2-020.0000T
DSC1001CI2-088.0000T
DSC1001CI2-020.0036T
DSC1001CI2-020.0037T
DSC1001CI1-001.5000T
DSC1001CI1-003.5800T
DSC1001CI1-125.0000T
DSC1001CL5-018.4320
DSC1001CL3-012.2880
DSC1001CL5-029.4912
DSC1001CL2-064.0000
DSC1001CL2-003.1250
DSC1001CL2-029.4912
DSC1001CL2-066.6660
DSC1001CL2-125.0000
DSC1001CL5-003.6864
DSC1001CL3-080.0000
DSC1001CL3-033.0000
DSC1001CE1-004.0960
DSC1001CL5-044.0000
DSC1001CL1-016.6400
DSC1003CL2-050.0000
DSC1001CE1-100.0000
DSC1001BL5-004.0000
DSC1003BE1-024.0000

DSC1001BE5-012.0000
DSC1001BE3-026.0000
DSC1001BL5-058.9824
DSC1001BE1-060.0000
DSC1003BL3-030.0000
DSC1003BL3-008.1920
DSC1001BE3-022.1184
DSC1003BL3-020.0000
DSC1003BL3-032.7680
DSC1003BL3-013.8420
DSC1003BL3-025.0000
DSC1003BL3-010.2400
DSC1003BL3-018.4320
DSC1001BL5-032.0000
DSC1001BE5-030.6400
DSC1001BL5-106.2500
DSC1001BL2-125.0000
DSC1004BL2-025.0000
DSC1004BL2-024.0000
DSC1001BE1-004.0625
DSC1001BE1-004.0960
DSC1001BL2-012.0000
DSC1001BE5-027.0000
DSC1001BE5-030.0000
DSC1001BE1-033.3333
DSC1001BL2-012.5000
DSC1001BL3-001.0000
DSC1001BE1-033.3330
DSC1001BE1-020.0000
DSC1001DE1-018.4320
DSC1001DE1-019.6608
DSC1001DE1-024.0000
DSC1001DE1-027.0000
DSC1001DE1-048.0000
DSC1001DE1-074.2500
DSC1001DE1-100.0000
DSC1001DE1-125.0000
DSC1001CI1-012.8000
DSC1001CI3-048.0000
DSC1001CI3-114.2850
DSC1001CI2-062.5000
DSC1001CI1-032.0000
DSC1001CI1-014.3181
DSC1001CI5-075.0000
DSC1003CI2-008.0000
DSC1001CI3-148.5000
DSC1001CI5-045.1584
DSC1001CI5-049.1520
DSC1001CI1-038.4000

DSC1001CI3-033.3333
DSC1003CI3-125.0063
DSC1001CI3-125.0063
DSC1001CI5-045.1850
DSC1001CI2-010.0000
DSC1001CI1-029.4912
DSC1001CI5-005.0000
DSC1001CI5-045.1854
DSC1001CI2-009.6000
DSC1004CI1-063.2200
DSC1001CI1-033.3300
DSC1001BI1-010.0000
DSC1001BI1-032.0000
DSC1001BI1-048.0000
DSC1001BI1-050.0000
DSC1001BI1-054.0000
DSC1001BI1-060.0000
DSC1001BI1-075.0000
DSC1001BI1-027.0000
DSC1001BI2-005.5296
DSC1001BI2-012.0000
DSC1001BI2-012.2880
DSC1001BI2-016.0000
DSC1001CL5-008.0000T
DSC1001CL5-150.0000T
DSC1001CL5-012.0000T
DSC1001CL5-019.2000T
DSC1001CL5-020.0000T
DSC1001CL5-024.0000T
DSC1001CL5-024.5760T
DSC1001CL5-025.0000T
DSC1001CL5-026.0000T
DSC1001CL5-027.0000T
DSC1001CL5-030.0000T
DSC1001CL5-032.0000T
DSC1001CL5-033.3330T
DSC1001CL5-050.0000T
DSC1001CL5-033.0000T
DSC1001CL5-060.0000T
DSC1001CE1-037.1250T
DSC1001CL5-114.0000T
DSC1001CL1-100.0000T
DSC1001CL5-014.7456T
DSC1001CL5-016.0000T
DSC1001CL5-014.3181T
DSC1001CL5-010.0000T
DSC1001CE1-125.0000T
DSC1001CE1-022.1184T
DSC1001CL5-080.0000T

DSC1001CL5-100.0000T
DSC1001CL5-125.0000T
DSC1001CL5-133.3330T
DSC1001CL5-012.0000TABR
DSC1003CL1-048.0000T
DSC1003CL1-095.0000T
DSC1001CL1-001.8432T
DSC1001CE2-012.2880T
DSC1001CE2-003.5800T
DSC1001CL1-001.6000T
DSC1001CE1-027.0000T
DSC1001CL2-024.0000T
DSC1001CE5-148.5000T
DSC1001CE1-014.3182T
DSC1001CE2-022.5792T
DSC1001CL1-033.3333T
DSC1001CL1-048.0000T
DSC1001CE1-066.6666T
DSC1001CE2-012.0000T
DSC1001CL1-024.0000T
DSC1001CL2-030.0000T
DSC1001CE1-019.2000T
DSC1001CL1-003.2500T
DSC1001CL2-008.0000T
DSC1001CL2-025.5760T
DSC1001CE1-083.3300T
DSC1001CE2-032.0000T
DSC1001CE1-050.0000T
DSC1001CL5-006.7700T
DSC1001CL5-006.7900T
DSC1001CL5-013.5400T
DSC1001CL5-013.5800T
DSC1001CL5-050.3500T
DSC1001CL5-001.6000T
DSC1001CL5-025.6000T
DSC1001CL5-011.0592T
DSC1001CE2-018.4320T
DSC1001CL5-012.8000T
DSC1001CL2-100.0000T
DSC1001CL2-054.0000T
DSC1004CE1-033.3333T
DSC1003CL2-025.0000T
DSC1001CE5-016.0000T
DSC1001CE1-008.0000T
DSC1001CE5-025.0000T
DSC1001CL5-048.0000T
DSC1001CE1-080.0000T
DSC1004CL5-016.0000T
DSC1001CE1-033.3300T

DSC1001CL2-024.5760T
DSC1001CL1-050.0000T
DSC1001CL2-014.7456T
DSC1001CL2-148.5000T
DSC1001CL2-016.0000T
DSC1001CE5-012.2880T
DSC1003CL2-027.0000T
DSC1004CL2-027.0000T
DSC1001CL5-016.3840T
DSC1001CE5-002.0000T
DSC1001CE5-008.0000T
DSC1001CE1-026.0000T
DSC1004CE1-025.6000T
DSC1001CL2-032.0000T
DSC1001CL2-033.3300T
DSC1001CL5-004.0000T
DSC1001CE1-033.3333T
DSC1001CL5-075.0000T
DSC1003CL5-050.0000T
DSC1003CL2-024.0000T
DSC1001CE1-006.1760T
DSC1001CE1-007.3728T
DSC1001CE1-008.1920T
DSC1001CE2-060.0000T
DSC1001CL1-002.0000T
DSC1000CL3-PROGT
DSC1000CL5-PROGT
DSC1001CL5-018.4320T
DSC1001CL3-012.2880T
DSC1001CL5-029.4912T
DSC1001CL2-064.0000T
DSC1001CL2-003.1250T
DSC1001CL2-029.4912T
DSC1001CL2-066.6660T
DSC1001CL2-125.0000T
DSC1001CL5-003.6864T
DSC1001CL3-080.0000T
DSC1001CL3-033.0000T
DSC1001CE1-004.0960T
DSC1001CL5-044.0000T
DSC1001CL1-016.6400T
DSC1003CL2-050.0000T
DSC1001CE1-100.0000T
DSC1001CE1-110.0000T
DSC1001CE1-032.0000T
DSC1001CL3-024.0000T
DSC1001CL3-072.0000T
DSC1001CE2-019.2000T
DSC1001CE2-108.0000T

DSC1001CE3-005.0000T
DSC1001CL2-048.0000T
DSC1001CL2-090.0000T
DSC1001CE2-064.0000T
DSC1001CL3-008.0000T
DSC1001CL1-012.0000T
DSC1001CL2-022.5792T
DSC1001CL5-007.3728T
DSC1001CL5-028.0000T
DSC1004CL2-003.2768T
DSC1001CL1-008.0000T
DSC1001CL2-026.0000T
DSC1001CL5-064.0000T
DSC1001CE2-013.5600T
DSC1001CE5-032.2123T
DSC1001CL2-006.0052T
DSC1001CL1-040.0000T
DSC1003CL1-020.0000T
DSC1001CL1-006.0053T
DSC1001CL3-025.0000T
DSC1001CL2-006.0053T
DSC1001CE2-033.3333T
DSC1001CL3-040.0000T
DSC1004CL2-030.0000T
DSC1001CE1-004.8500T
DSC1001CE3-032.0000T
DSC1001CE3-064.0000T
DSC1001CE1-002.0800T
DSC1001CE1-016.0000T
DSC1001CE1-120.0000T
DSC1003CL3-133.3330T
DSC1001CL2-080.0000T
DSC1001CE1-003.5000T
DSC1001CL2-120.0000T
DSC1001CE2-075.0000T
DSC1001CE3-024.0000T
DSC1001CL2-066.6666T
DSC1001CL2-060.0000T
DSC1001CL3-006.1440T
DSC1001CL1-027.0000T
DSC1001BE1-016.0000T
DSC1001BE1-024.0000T
DSC1001BE1-025.0000T
DSC1001BE1-048.0000T
DSC1001BE1-050.0000T
DSC1001BE1-125.0000T
DSC1001BE1-133.3300T
DSC1001BE2-012.0000T
DSC1001BE2-125.0000T

DSC1001BL1-027.0000T
DSC1001BL1-048.0000T
DSC1001BL2-027.0000T
DSC1001BL2-050.0000T
DSC1001BL5-008.0000T
DSC1001BL5-010.0000T
DSC1001BL5-012.0000T
DSC1001BE2-024.0000T
DSC1001BL5-024.0000T
DSC1001BL5-024.5760T
DSC1001BL5-025.0000T
DSC1001BL5-040.0000T
DSC1001BL5-048.0000T
DSC1001BL5-066.6666T
DSC1001BL5-100.0000T
DSC1001BL5-133.3330T
DSC1001BL5-150.0000T
DSC1001BL2-025.0000T
DSC1001BL5-050.0000T
DSC1001BL5-016.0000T
DSC1001BL5-080.0000T
DSC1001BE5-022.5792T
DSC1001BL5-020.0000T
DSC1001BE1-012.0000T
DSC1001BL1-016.0000T
DSC1001BE5-064.0000T
DSC1001BL5-064.0000T
DSC1001DE2-016.0000
DSC1001DE2-050.0000
DSC1000DL5-PROGT
DSC1001DL2-054.0000T
DSC1001DL3-027.0000T
DSC1001DL3-024.0000T
DSC1001DL5-016.3840T
DSC1001DL2-016.3690T
DSC1001DL2-061.2500T
DSC1003DL2-033.3333T
DSC1001DL5-018.4320T
DSC1001DL5-033.3333T
DSC1001DL2-003.6864T
DSC1001DL5-003.6864T
DSC1001DE2-001.0000T
DSC1001DE2-090.0000T
DSC1004DL5-025.0000T
DSC1001DE2-022.0000T
DSC1001DL5-037.1250T
DSC1001DL5-150.0000T
DSC1001DL2-033.3300T
DSC1001DE5-025.0000T

DSC1001DE1-024.5760T
DSC1001DL5-047.0016T
DSC1001DL1-005.0196T
DSC1001DL2-005.0196T
DSC1001DL5-005.0196T
DSC1001DE3-080.0000T
DSC1001DL1-150.0000T
DSC1001DE3-008.0000T
DSC1001DE5-150.0000T
DSC1003DL1-025.0000T
DSC1003DL1-016.0000T
DSC1003DL1-050.0000T
DSC1003DL1-048.0000T
DSC1003DL2-024.0000T
DSC1004DE1-026.0000T
DSC1001DL1-050.0000T
DSC1001DE5-049.1520T
DSC1001DE5-045.1584T
DSC1001DL1-040.0000T
DSC1001DL5-064.0000T
DSC1004DE2-025.0000T
DSC1001DL5-028.6363T
DSC1001DL5-006.0000T
DSC1001DL1-033.3330T
DSC1001DL5-029.4912T
DSC1001DL1-004.0000T
DSC1001DL2-100.0000T
DSC1001DL5-032.4000T
DSC1001DL5-049.5000T
DSC1001DL2-012.5000T
DSC1001DL1-012.5000T
DSC1001DL3-125.0000T
DSC1001DL5-006.4000T
DSC1001DL1-007.3728T
DSC1003DL3-020.0000T
DSC1003DL3-025.0000T
DSC1001DL5-026.5980T
DSC1001DL5-120.0000T
DSC1001DL5-087.0655T
DSC1001CC1-010.0000T
DSC1001CC1-047.3333T
DSC1001CC1-076.0686T
DSC1001CC1-125.0000T
DSC1001CC5-008.5920T
DSC1001CC2-025.0000T
DSC1001CC5-004.1943T
DSC1001CC5-024.5760T
DSC1001CI1-132.0000T
DSC1001CC2-012.2880T

DSC1001CC1-008.0000T
DSC1001CC2-033.0000T
DSC1001CC2-024.0000T
DSC1001BC1-020.0000T
DSC1001BC1-080.0000T
DSC1001BC1-040.0000T
DSC1001BC1-024.0000T
DSC1001BC1-050.0000T
DSC1001DC1-025.0000T
DSC1001DC1-050.0000T
DSC1001DC1-072.0000T
DSC1001DC1-074.2500T
DSC1001DC5-038.8800T
DSC1004DC1-050.0000T
DSC1001DC5-037.4000T
DSC1004DC1-020.0000T
DSC1001DC5-012.8000T
DSC1001DC1-100.0000T
DSC1001CI1-001.8432T
DSC1001CI1-007.5000T
DSC1001CI1-008.0000T
DSC1001CI1-010.0000T
DSC1001CI1-001.0000T
DSC1001CI1-013.5600T
DSC1001CI1-014.7456T
DSC1001CI1-016.0000T
DSC1001CI1-019.2000T
DSC1001CI1-020.0000T
DSC1001CI1-024.0000T
DSC1001CI1-024.5760T
DSC1001CI1-025.0000T
DSC1001CI1-026.0000T
DSC1001CI1-027.0000T
DSC1001CI1-030.0000T
DSC1001CI2-004.0000T
DSC1001CI2-008.0000T
DSC1001CI1-033.3333T
DSC1001CI1-047.3333T
DSC1001CI2-018.4320T
DSC1001CI1-050.0000T
DSC1001CI1-076.0686T
DSC1001CI2-014.3181T
DSC1001CI2-001.0000T
DSC1001CI2-002.0480T
DSC1001CI2-003.5795T
DSC1001CI2-022.5792T
DSC1001CI2-006.1400T
DSC1001CI2-011.0592T
DSC1001CI2-012.0000T

DSC1001CI2-012.2880T

DSC1001CI2-014.7456T