Product Change Notification - SYST-08WWEF257

Date:

09 Aug 2019

Product Category:

8-bit Microcontrollers

Affected CPNs:

Notification subject:

Data Sheet - megaAVR 0-series Family Data Sheet

Notification text:

SYST-08WWEF257

Microchip has released a new DeviceDoc for the megaAVR 0-series Family Data Sheet of devices. If you are using one of these devices please read the document located at megaAVR 0-series Family Data Sheet.

Notification Status: Final

Description of Change:

1) Entire document chapter: Editorial updates
2) Feature chapter: Added industrial temperature range -40°C to +85°C
3) 2 megaAVR 0-series Overview chapter: megaAVR 0-series Overview. Added ordering code for industrial temperature range in megaAVR Device Designations figure.
4) 5.8 Fuses (FUSE) chapter: Added default fuse values

Impacts to Data Sheet: None

Reason for Change: To Improve Manufacturability

Change Implementation Status: Complete

Date Document Changes Effective: 09 Aug 2019

NOTE: Please be advised that this is a change to the document only the product has not been changed.

Markings to Distinguish Revised from Unrevised Devices: N/A

Attachment(s):

megaAVR 0-series Family Data Sheet

Please contact your local Microchip sales office with questions or concerns regarding this notification.

Terms and Conditions:

If you wish to receive Microchip PCNs via email please register for our PCN email service at our PCN home page select register then fill in the required fields. You will find instructions about registering for Microchips PCN email service in the PCN FAQ section.
If you wish to change your PCN profile, including opt out, please go to the PCN home page select login and sign into your myMicrochip account. Select a profile option from the left navigation bar and make the applicable selections.

Affected Catalog Part Numbers (CPN)

ATMEGA1608-AF
ATMEGA1608-AFR
ATMEGA1608-AU
ATMEGA1608-AUR
ATMEGA1608-MF
ATMEGA1608-MFR
ATMEGA1608-MU
ATMEGA1608-MUR
ATMEGA1608-XF
ATMEGA1608-XFR
ATMEGA1608-XU
ATMEGA1608-XUR
ATMEGA1609-AF
ATMEGA1609-AFR
ATMEGA1609-AU
ATMEGA1609-AUR
ATMEGA3208-AF
ATMEGA3208-AFR
ATMEGA3208-AU
ATMEGA3208-AUR
ATMEGA3208-MF
ATMEGA3208-MFR
ATMEGA3208-MU
ATMEGA3208-MUR
ATMEGA3208-XF
ATMEGA3208-XFR
ATMEGA3208-XU
ATMEGA3208-XUR
ATMEGA3209-AF
ATMEGA3209-AFR
ATMEGA3209-AU
ATMEGA3209-AUR
ATMEGA3209-MF
ATMEGA3209-MFR
ATMEGA3209-MU
ATMEGA3209-MUR
ATMEGA4808-AF
ATMEGA4808-AFR
ATMEGA4808-AU
ATMEGA4808-AUR
ATMEGA4808-MF
ATMEGA4808-MFR
ATMEGA4808-MU
ATMEGA4808-MUR
ATMEGA4808-XF
ATMEGA4808-XFR

ATMEGA4808-XU
ATMEGA4808-XUR
ATMEGA4809-AF
ATMEGA4809-AFR
ATMEGA4809-AU
ATMEGA4809-AUR
ATMEGA4809-MF
ATMEGA4809-MFR
ATMEGA4809-MU
ATMEGA4809-MUR
ATMEGA4809-PF
ATMEGA4809-XPRO
ATMEGA808-AF
ATMEGA808-AFR
ATMEGA808-AU
ATMEGA808-AUR
ATMEGA808-MF
ATMEGA808-MFR
ATMEGA808-MU
ATMEGA808-MUR
ATMEGA808-XF
ATMEGA808-XFR
ATMEGA808-XU
ATMEGA808-XUR
ATMEGA809-AF
ATMEGA809-AFR
ATMEGA809-AU
ATMEGA809-AUR

megaAVR® 0-series

Family Data Sheet

Introduction

The ATmega808/809/1608/1609/3208/3209/4808/4809 microcontrollers of the megaAVR® 0-series are using the AVR® processor with hardware multiplier, running at up to 20 MHz, with a wide range of Flash sizes up to 48 KB, up to 6 KB of SRAM, and 256 bytes of EEPROM in 28-, 32-, 40-, or 48-pin package. The series uses the latest technologies from Microchip with a flexible and low-power architecture including Event System and SleepWalking, accurate analog features and advanced peripherals.

This family data sheet contains the general descriptions of the peripherals. While the available peripherals have identical features and show the same behavior across the series, packages with fewer pins support a subset of signals. Refer to the data sheet of the individual device for available pins and signals.

Features

- AVR® CPU:
  - Single-cycle I/O access
  - Two-level interrupt controller
  - Two-cycle hardware multiplier
- Memories:
  - Up to 48 KB In-system self-programmable Flash memory
  - 256B EEPROM
  - Up to 6 KB SRAM
  - Write/Erase endurance:
    - Flash 10,000 cycles
    - EEPROM 100,000 cycles
  - Data retention: 40 years at 55°C
- System:
  - Power-on Reset (POR) circuit
  - Brown-out Detector (BOD)
  - Clock options:
    - 16/20 MHz low-power internal oscillator
    - 32.768 kHz Ultra Low-Power (ULP) internal oscillator
    - 32.768 kHz external crystal oscillator
    - External clock input
  - Single-pin Unified Program Debug Interface (UPDI)
  - Three sleep modes:
    - Idle with all peripherals running for immediate wake-up
    - Standby
      - Configurable operation of selected peripherals
      - SleepWalking peripherals
    - Power-Down with limited wake-up functionality
- Peripherals:

© 2019 Microchip Technology Inc.

  - One 16-bit Timer/Counter type A (TCA) with a dedicated period register and three compare channels
  - Up to four 16-bit Timer/Counter type B (TCB) with input capture
  - One 16-bit Real-Time Counter (RTC) running from an external crystal or an internal RC oscillator
  - Up to four USARTs with fractional baud rate generator, auto-baud, and start-of-frame detection
  - Master/slave Serial Peripheral Interface (SPI)
  - Master/slave TWI with dual address match
    - Can operate simultaneously as master and slave
    - Standard mode (Sm, 100 kHz)
    - Fast mode (Fm, 400 kHz)
    - Fast mode plus (Fm+, 1 MHz)
  - Event System for core independent and predictable inter-peripheral signaling
  - Configurable Custom Logic (CCL) with up to four programmable Look-up Tables (LUT)
  - One Analog Comparator (AC) with a scalable reference input
  - One 10-bit 150 ksps Analog-to-Digital Converter (ADC)
  - Five selectable internal voltage references: 0.55V, 1.1V, 1.5V, 2.5V, and 4.3V
  - CRC code memory scan hardware
    - Optional automatic CRC scan before code execution is allowed
  - Watchdog Timer (WDT) with Window mode, with a separate on-chip oscillator
  - External interrupt on all general purpose pins
- I/O and Packages:
  - Up to 41 programmable I/O lines
  - 28-pin SSOP
  - 32-pin VQFN 5x5 and TQFP 7x7
  - 40-pin PDIP
  - 48-pin UQFN 6x6 and TQFP 7x7
- Temperature Ranges:
  - Industrial: -40°C to +85°C
  - Extended: -40°C to +125°C
- Speed Grades -40°C to +105°C:
  - 0-5 MHz @ 1.8V – 5.5V
  - 0-10 MHz @ 2.7V – 5.5V
  - 0-20 MHz @ 4.5V – 5.5V
- Speed Grades -40°C to +125°C:
  - 0-8 MHz @ 2.7V - 5.5V
  - 0-16 MHz @ 4.5V - 5.5V

Table of Contents

Introduction....1

Features....1

1. Block Diagram....8

2. megaAVR® 0-series Overview....9
   - 2.1. Memory Overview....9
   - 2.2. Peripheral Overview....10

3. Conventions....11
   - 3.1. Numerical Notation....11
   - 3.2. Memory Size and Type....11
   - 3.3. Frequency and Time....11
   - 3.4. Registers and Bits....12

4. Acronyms and Abbreviations....13

5. Memories....16
   - 5.1. Overview....16
   - 5.2. Memory Map....16
   - 5.3. In-System Reprogrammable Flash Program Memory....17
   - 5.4. SRAM Data Memory....18
   - 5.5. EEPROM Data Memory....18
   - 5.6. User Row (USERROW)....18
   - 5.7. Signature Row (SIGROW)....19
   - 5.8. Fuses (FUSE)....31
   - 5.9. Memory Section Access from CPU and UPDI on Locked Device....40
   - 5.10. I/O Memory....41

6. Peripherals and Architecture....44
   - 6.1. Peripheral Module Address Map....44
   - 6.2. Interrupt Vector Mapping....46
   - 6.3. System Configuration (SYSCFG)....48

7. AVR CPU....51
   - 7.1. Features....51
   - 7.2. Overview....51
   - 7.3. Architecture....51
   - 7.4. Arithmetic Logic Unit (ALU)....52
   - 7.5. Functional Description....53
   - 7.6. Register Summary - CPU....58
   - 7.7. Register Description....58

8. NVMCTRL - Nonvolatile Memory Controller....62
   - 8.1. Features....62
   - 8.2. Overview....62
   - 8.3. Functional Description....63

8.4. Register Summary - NVMCTRL....68
8.5. Register Description....68

9. CLKCTRL - Clock Controller....76
9.1. Features....76
9.2. Overview....76
9.3. Functional Description....78
9.4. Register Summary - CLKCTRL....82
9.5. Register Description....82

10. SLPCTRL - Sleep Controller....92
10.1. Features....92
10.2. Overview....92
10.3. Functional Description....92
10.4. Register Summary - SLPCTRL....95
10.5. Register Description....95

11. RSTCTRL - Reset Controller....97
11.1. Features....97
11.2. Overview....97
11.3. Functional Description....97
11.4. Register Summary - RSTCTRL....100
11.5. Register Description....100

12. CPUINT - CPU Interrupt Controller....103
12.1. Features....103
12.2. Overview....103
12.3. Functional Description....104
12.4. Register Summary - CPUINT....110
12.5. Register Description....110

13. EVSYS - Event System....115
13.1. Features....115
13.2. Overview....115
13.3. Functional Description....116
13.4. Register Summary - EVSYS....120
13.5. Register Description....120

14. PORTMUX - Port Multiplexer....125
14.1. Overview....125
14.2. Register Summary - PORTMUX....126
14.3. Register Description....126

15. PORT - I/O Pin Configuration....133
15.1. Features....133
15.2. Overview....133
15.3. Functional Description....134
15.4. Register Summary - PORTx....138
15.5. Register Description - Ports....138

15.6. Register Summary - VPORTx 151
15.7. Register Description - Virtual Ports 151

16. BOD - Brown-out Detect 156
16.1. Features 156
16.2. Overview 156
16.3. Functional Description 157
16.4. Register Summary - BOD 159
16.5. Register Description 159

17. VREF - Voltage Reference 166
17.1. Features 166
17.2. Overview 166
17.3. Functional Description 166
17.4. Register Summary - VREF 167
17.5. Register Description 167

18. WDT - Watchdog Timer 170
18.1. Features 170
18.2. Overview 170
18.3. Functional Description 171
18.4. Register Summary - WDT 174
18.5. Register Description 174

19. TCA - 16-bit Timer/Counter Type A 177
19.1. Features 177
19.2. Overview 177
19.3. Functional Description 180
19.4. Register Summary - TCAn in Normal Mode 189
19.5. Register Description - Normal Mode 189
19.6. Register Summary - TCAn in Split Mode 209
19.7. Register Description - Split Mode 209

20. TCB - 16-bit Timer/Counter Type B 225
20.1. Features 225
20.2. Overview 225
20.3. Functional Description 227
20.4. Register Summary - TCB 235
20.5. Register Description 235

21. RTC - Real-Time Counter 246
21.1. Features 246
21.2. Overview 246
21.3. Clocks 247
21.4. RTC Functional Description 247
21.5. PIT Functional Description 248
21.6. Crystal Error Correction 249
21.7. Events 249
21.8. Interrupts 250

21.9. Sleep Mode Operation.... 250
21.10. Synchronization....250
21.11. Debug Operation....251
21.12. Register Summary - RTC....252
21.13. Register Description....252

22. USART - Universal Synchronous and Asynchronous Receiver and Transmitter....269
22.1. Features.... 269
22.2. Overview.... 269
22.3. Functional Description....270
22.4. Register Summary - USARTn.... 285
22.5. Register Description.... 285

23. SPI - Serial Peripheral Interface....302
23.1. Features.... 302
23.2. Overview.... 302
23.3. Functional Description....304
23.4. Register Summary - SPIn....311
23.5. Register Description.... 311

24. TWI - Two-Wire Interface.... 318
24.1. Features.... 318
24.2. Overview.... 318
24.3. Functional Description....319
24.4. Register Summary - TWIn....330
24.5. Register Description.... 330

25. CRCSCAN - Cyclic Redundancy Check Memory Scan.... 348
25.1. Features.... 348
25.2. Overview.... 348
25.3. Functional Description....349
25.4. Register Summary - CRCSCAN....352
25.5. Register Description.... 352

26. CCL – Configurable Custom Logic....356
26.1. Features.... 356
26.2. Overview.... 356
26.3. Functional Description....358
26.4. Register Summary - CCL.... 366
26.5. Register Description.... 366

27. AC - Analog Comparator....377
27.1. Features.... 377
27.2. Overview.... 377
27.3. Functional Description....378
27.4. Register Summary - AC.... 380
27.5. Register Description.... 380

28. ADC - Analog-to-Digital Converter.... 386

28.1. Features....386
28.2. Overview....386
28.3. Functional Description....389
28.4. Register Summary - ADCn....396
28.5. Register Description....396

29. UPDI - Unified Program and Debug Interface....414
29.1. Features....414
29.2. Overview....414
29.3. Functional Description....416
29.4. Register Summary - UPDI....434
29.5. Register Description....434

30. Instruction Set Summary....445

31. Data Sheet Revision History....451
31.1. Rev.C - 08/2019....451
31.2. Rev.B - 03/2019....451
31.3. Rev. A - 02/2018....453

The Microchip Website....454

Product Change Notification Service....454

Customer Support....454

Product Identification System....455

Microchip Devices Code Protection Feature....455

Legal Notice....455

Trademarks....455

Quality Management System....456

Worldwide Sales and Service....457

1. Block Diagram

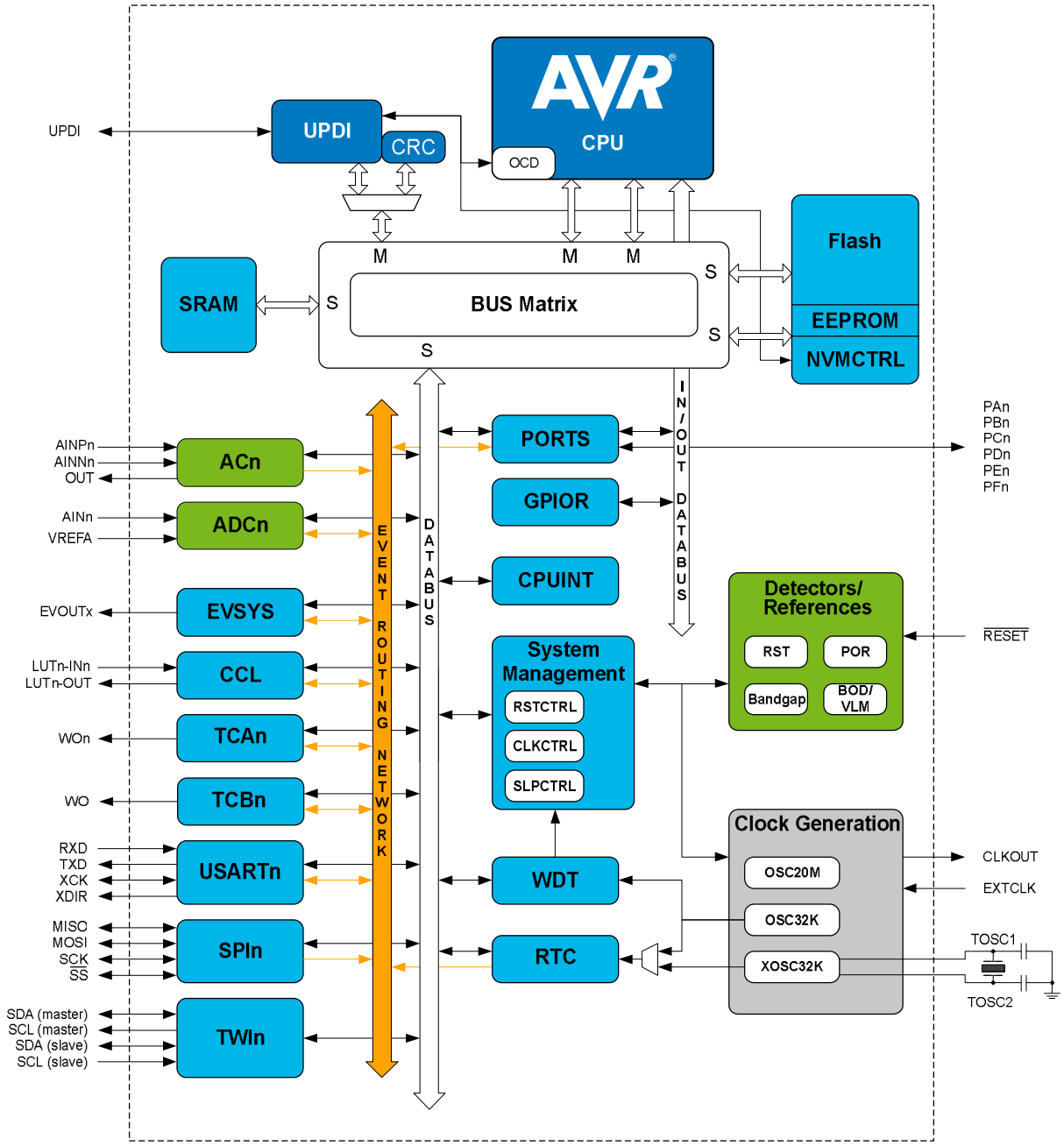

2. megaAVR® 0-series Overview

The figure below shows the megaAVR 0-series devices, laying out pin count variants and memory sizes:

- Vertical migration is possible without code modification, as these devices are fully pin and feature compatible
- Horizontal migration to the left reduces the pin count and, therefore, the available features

Figure 2-1. megaAVR® 0-series Overview

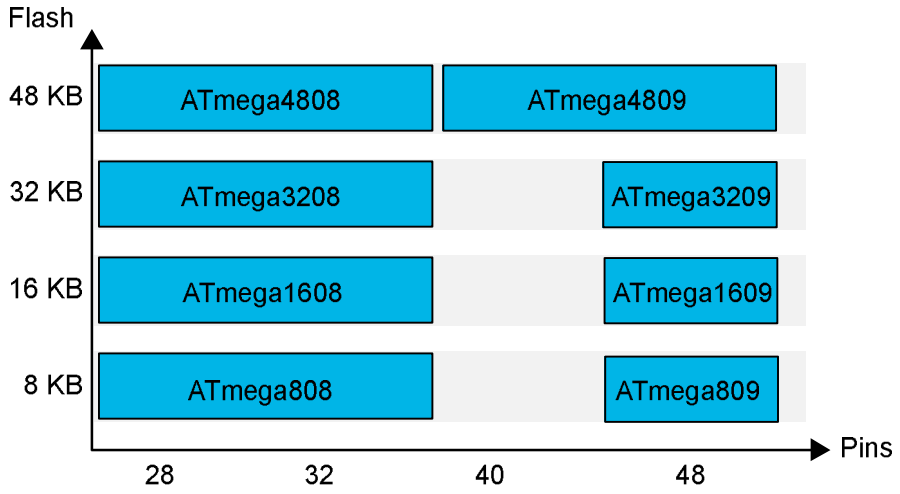

Devices with different Flash memory size typically also have different SRAM and EEPROM.

The name of a device in the megaAVR® 0-series is decoded as follows:

Figure 2-2. megaAVR® Device Designations

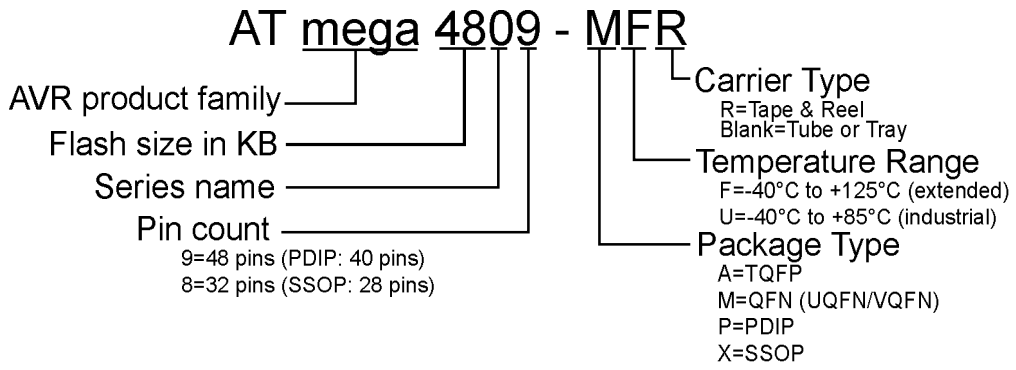

2.1 Memory Overview

Table 2-1. Memory Overview

Memory Type	ATmega80x	ATmega160x	ATmega320x	ATmega480x
Flash	8 KB	16 KB	32 KB	48 KB
SRAM	1 KB	2 KB	4 KB	6 KB
EEPROM	256B	256B	256B	256B
User row	32B	32B	64B	64B

2.2 Peripheral Overview

Table 2-2. Peripheral Overview

Feature	ATmega808 ATmega1608 ATmega3208 ATmega4808	ATmega808 ATmega1608 ATmega3208 ATmega4808	ATmega4809	ATmega809 ATmega1609 ATmega3209 ATmega4809
Pins	**28**	**32**	**40**	**48**
Max. frequency (MHz)	20	20	20	20
16-bit Timer/Counter type A (TCA)	1	1	1	1
16-bit Timer/Counter type B (TCB)	3	3	4	4
12-bit Timer/Counter type D (TCD)	-	-	-	-
Real-Time Counter (RTC)	1	1	1	1
USART	3	3	4	4
SPI	1	1	1	1
TWI (I^2C)	1[(1)]	1[(1)]	1[(1)]	1[(1)]
ADC (channels)	1 (8)	1 (12)	1 (16)	1 (16)
DAC (outputs)	-	-	-	-
AC (inputs)	1 (4p/3n)	1 (4p/3n)	1 (4p/3n)	1 (4p/3n)
Peripheral Touch Controller (PTC) (self-cap/mutual cap channels)	-	-	-	-
Custom Logic (LUTs)	1 (4)	1 (4)	1 (4)	1 (4)
Window Watchdog	1	1	1	1
Event System channels	6	6	8	8
General purpose I/O	23	27	34	41
PORT	PA[0:7], PC[0:3], PD[0:7], PF[0,1,6]	PA[0:7], PC[0:3], PD[0:7], PF[0:6]	PA[0:7], PC[0:5], PD[0:7], PE[0:3], PF[0:6]	PA[0:7], PB[0:5], PC[0:7], PD[0:7], PE[0:3], PF[0:6]
Asynchronous external interrupts	6	7	8	10
CRCSCAN	1	1	1	1

1. TWI can operate as master and slave at the same time on different pins.

3. Conventions

3.1 Numerical Notation

Table 3-1. Numerical Notation

Symbol	Description
165	Decimal number
0b0101	Binary number (example 0b0101 = 5 decimal)
'0101'	Binary numbers are given without prefix if unambiguous
0x3B24	Hexadecimal number
X	Represents an unknown or don't care value
Z	Represents a high-impedance (floating) state for either a signal or a bus

3.2 Memory Size and Type

Table 3-2. Memory Size and Bit Rate

Symbol	Description
KB	kilobyte (2^{10} = 1024)
MB	megabyte (2^{20} = 1024*1024)
GB	gigabyte (2^{30} = 1024*1024*1024)
b	bit (binary '0' or '1')
B	byte (8 bits)
1 kbit/s	1,000 bit/s rate (not 1,024 bit/s)
1 Mbit/s	1,000,000 bit/s rate
1 Gbit/s	1,000,000,000 bit/s rate
word	16-bit

3.3 Frequency and Time

Table 3-3. Frequency and Time

Symbol	Description
kHz	1 kHz = 10^3 Hz = 1,000 Hz
KHz	1 KHz = 1,024 Hz, 32 KHz = 32,768 Hz
MHz	1 MHz = 10^6 Hz = 1,000,000 Hz
GHz	1 GHz = 10^9 Hz = 1,000,000,000 Hz
s	second
ms	millisecond

.....continued	
Symbol	**Description**
µs	microsecond
ns	nanosecond

3.4 Registers and Bits

Table 3-4. Register and Bit Mnemonics

Symbol	Description
R/W	Read/Write accessible register bit. The user can read from and write to this bit.
R	Read-only accessible register bit. The user can only read this bit. Writes will be ignored.
W	Write-only accessible register bit. The user can only write this bit. Reading this bit will return an undefined value.
BITFIELD	Bitfield names are shown in uppercase. Example: INTMODE.
BITFIELD[n:m]	A set of bits from bit n down to m. Example: PINA[3:0] = {PINA3, PINA2, PINA1, PINA0}.
Reserved	Reserved bits are unused and reserved for future use. Bitfields in the Register Summary or Register Description chapters that have gray background are Reserved bits. For compatibility with future devices, always write reserved bits to zero when the register is written. Reserved bits will always return zero when read. Reserved bit field values must not be written to a bit field. A reserved value won't be read from a read-only bit field.
PERIPHERALn	If several instances of the peripheral exist, the peripheral name is followed by a single number to identify one instance. Example: USARTn is the collection of all instances of the USART module, while USART3 is one specific instance of the USART module.
PERIPHERALx	If several instances of the peripheral exist, the peripheral name is followed by a single capital letter (A-Z) to identify one instance. Example: PORTx is the collection of all instances of the PORT module, while PORTB is one specific instance of the PORT module.
Reset	Value of a register after a power Reset. This is also the value of registers in a peripheral after performing a software Reset of the peripheral, except for the Debug Control registers.
SET/CLR	Registers with SET/CLR suffix allows the user to clear and set bits in a register without doing a read-modify-write operation. These registers always come in pairs. Writing a ‘1’ to a bit in the CLR register will clear the corresponding bit in both registers, while writing a ‘1’ to a bit in the SET register will set the corresponding bit in both registers. Both registers will return the same value when read. If both registers are written simultaneously, the write to the CLR register will take precedence.

3.4.1 Addressing Registers from Header Files

In order to address registers in the supplied C header files, the following rules apply:

1. A register is identified by <peripheral_instance_name>.<register_name>, e.g. CPU.SREG, USART2.CTRLA, or PORTB.DIR.
2. The peripheral name is written in the peripheral's register summary heading, e.g. "Register Summary - ACn", where "ACn" is the peripheral name.
3. <peripheral_instance_name> is obtained by substituting any n or x in the peripheral name with the correct instance identifier.

4. Acronyms and Abbreviations

The table below contains acronyms and abbreviations used in this document.

Table 4-1. Acronyms and Abbreviations

Abbreviation	Description
AC	Analog Comparator
ACK	Acknowledge
ADC	Analog-to-Digital Converter
ADDR	Address
AES	Advanced Encryption Standard
ALU	Arithmetic Logic Unit
AREF	Analog reference voltage, also VREFA
BLB	Boot Lock Bit
BOD	Brown-out Detector
CAL	Calibration
CCMP	Compare/Capture
CCL	Configurable Custom Logic
CCP	Configuration Change Protection
CLK	Clock
CLKCTRL	Clock Controller
CRC	Cyclic Redundancy Check
CTRL	Control
DAC	Digital-to-Analog Converter
DFLL	Digital Frequency Locked Loop
DMAC	DMA (Direct Memory Access) Controller
DNL	Differential Nonlinearity (ADC characteristics)
EEPROM	Electrically Erasable Programmable Read-Only Memory
EVSYS	Event System
GND	Ground
GPIO	General Purpose Input/Output
I^2C	Inter-Integrated Circuit
IF	Interrupt flag
INL	Integral Nonlinearity (ADC characteristics)
INT	Interrupt
IrDA	Infrared Data Association
IVEC	Interrupt Vector
LSB	Least Significant Byte

.....continued

Abbreviation	Description
LSb	Least Significant bit
LUT	Look Up Table
MBIST	Memory Built-in Self-test
MSB	Most Significant Byte
MSb	Most Significant bit
NACK	Not Acknowledge
NMI	Non-maskable interrupt
NVM	Nonvolatile Memory
NVMCTRL	Nonvolatile Memory Controller
OPAMP	Operation Amplifier
OSC	Oscillator
PC	Program Counter
PER	Period
POR	Power-on Reset
PORT	I/O Pin Configuration
PTC	Peripheral Touch Controller
PWM	Pulse-width Modulation
RAM	Random Access Memory
REF	Reference
REQ	Request
RISC	Reduced Instruction Set Computer
RSTCTRL	Reset Controller
RTC	Real-time Counter
RX	Receiver/Receive
SERCOM	Serial Communication Interface
SLPCTRL	Sleep Controller
SMBus	System Management Bus
SP	Stack Pointer
SPI	Serial Peripheral Interface
SRAM	Static Random Access Memory
SYSCFG	System Configuration
TC	Timer/Counter (Optionally superseded by a letter indicating type of TC)
TRNG	True Random Number Generator
TWI	Two-wire Interface
TX	Transmitter/Transmit

.....continued

Abbreviation	Description
ULP	Ultra Low Power
UPDI	Unified Program and Debug Interface
USART	Universal Synchronous and Asynchronous Serial Receiver and Transmitter
USB	Universal Serial Bus
V_{DD}	Voltage to be applied to V_{DD}
VREF	Voltage Reference
V_{CM}	Voltage Common mode
WDT	Watchdog Timer
XOSC	Crystal Oscillator

5. Memories

5.1 Overview

The main memories are SRAM data memory, EEPROM data memory, and Flash program memory. In addition, the peripheral registers are located in the I/O memory space.

5.2 Memory Map

The figure below shows the memory map for the biggest memory derivative in the series. Refer to the subsequent subsections for details on memory sizes and start addresses for devices with smaller memory sizes.

Figure 5-1. Memory Map: Flash 48 KB, Internal SRAM 6 KB, EEPROM 256B

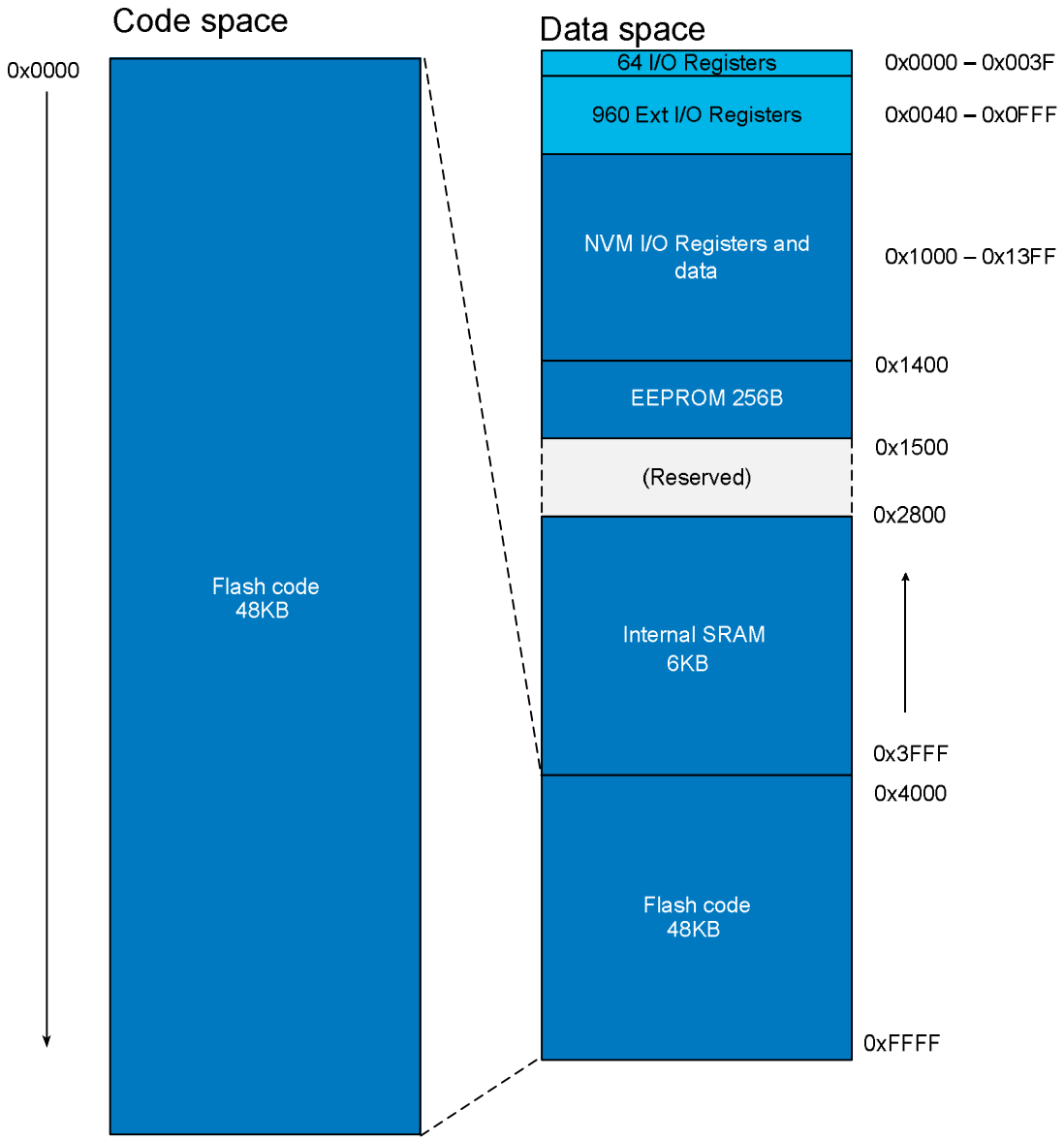

5.3 In-System Reprogrammable Flash Program Memory

The ATmega808/809/1608/1609/3208/3209/4808/4809 contains up to 48 KB On-Chip In-System Reprogrammable Flash memory for program storage. Since all AVR instructions are 16 or 32 bits wide, the Flash is organized with 16-bit data width. For write protection, the Flash program memory space can be divided into three sections: boot loader section, application code section, and application data section. Code placed in one section may be restricted from writing to addresses in other sections, see the NVMCTRL documentation for more details.

The Program Counter is able to address the whole program memory. The procedure for writing Flash memory is described in detail in the documentation of the Nonvolatile Memory Controller (NVMCTRL) peripheral.

The Flash memory is mapped into the data space and is accessible with normal `LD/ST` instructions. For `LD/ST` instructions, the Flash is mapped from address 0x4000. The Flash memory can be read with the `LPM` instruction. For the `LPM` instruction, the Flash start address is 0x0000.

The ATmega808/809/1608/1609/3208/3209/4808/4809 has a CRC module that is a master on the bus.

Table 5-1. Physical Properties of Flash Memory

Property	ATmega80x	ATmega160x	ATmega320x	ATmega480x
Size	8 KB	16 KB	32 KB	48 KB
Page size	64B	64B	128B	128B
Number of pages	128	256	256	384
Start address in Data Space	0x4000	0x4000	0x4000	0x4000
Start address in Code Space	0x0000	0x0000	0x0000	0x0000

5.4 SRAM Data Memory

The primary task of the SRAM memory is to store application data. It is not possible to execute code from SRAM.

Table 5-2. Physical Properties of SRAM

Property	ATmega80x	ATmega160x	ATmega320x	ATmega480x
Size	1 KB	2 KB	4 KB	6 KB
Start address	0x3C00	0x3800	0x3000	0x2800

5.5 EEPROM Data Memory

The primary task of the EEPROM memory is to store nonvolatile application data. The EEPROM memory supports single byte read and write. The EEPROM is controlled by the Nonvolatile Memory Controller (NVMCTRL).

Table 5-3. Physical Properties of EEPROM

Property	ATmega80x	ATmega160x	ATmega320x	ATmega480x
Size	256B	256B	256B	256B
Page size	32B	32B	64B	64B
Number of pages	8	8	4	4
Start address	0x1400	0x1400	0x1400	0x1400

5.6 User Row (USERROW)

In addition to the EEPROM, the ATmega808/809/1608/1609/3208/3209/4808/4809 has one extra page of EEPROM memory that can be used for firmware settings, the User Row (USERROW). This memory supports single byte read and write as the normal EEPROM. The CPU can write and read this memory as normal EEPROM and the UPDI can write and read it as a normal EEPROM memory if the part is unlocked. The User Row can also be written by the UPDI when the part is locked. USERROW is not affected by a chip erase. The USERROW can be used for final configuration without having programming or debugging capabilities enabled.

5.7 Signature Row (SIGROW)

The content of the Signature Row fuses (SIGROW) is preprogrammed and cannot be altered. SIGROW holds information such as device ID, serial number, and factory calibration values.

All AVR microcontrollers have a three-byte device ID which identifies the device. This device ID can be read in both serial and parallel mode, also when the device is locked. The three bytes reside in the Signature Row. The signature bytes are given in the following table.

Table 5-4. Device ID

Device Name	Signature Bytes Address		
	0x00	0x01	0x02
ATmega4809	0x1E	0x96	0x51
ATmega4808	0x1E	0x96	0x50
ATmega3209	0x1E	0x95	0x31
ATmega3208	0x1E	0x95	0x30
ATmega1609	0x1E	0x94	0x26
ATmega1608	0x1E	0x94	0x27
ATmega809	0x1E	0x93	0x2A
ATmega808	0x1E	0x93	0x26

5.7.1 SIGROW - Signature Row Summary

Offset	Name	Bit Pos.								
0x00	DEVICEID0	7:0	DEVICEID[7:0]							
0x01	DEVICEID1	7:0	DEVICEID[7:0]							
0x02	DEVICEID2	7:0	DEVICEID[7:0]							
0x03	SERNUM0	7:0	SERNUM[7:0]							
0x04	SERNUM1	7:0	SERNUM[7:0]							
0x05	SERNUM2	7:0	SERNUM[7:0]							
0x06	SERNUM3	7:0	SERNUM[7:0]							
0x07	SERNUM4	7:0	SERNUM[7:0]							
0x08	SERNUM5	7:0	SERNUM[7:0]							
0x09	SERNUM6	7:0	SERNUM[7:0]							
0x0A	SERNUM7	7:0	SERNUM[7:0]							
0x0B	SERNUM8	7:0	SERNUM[7:0]							
0x0C	SERNUM9	7:0	SERNUM[7:0]							
0x0D ... 0x17	Reserved									
0x18	OSCCAL16M0	7:0		OSCCAL16M[6:0]						
0x19	OSCCAL16M1	7:0					OSCCAL16MTCAL[3:0]			
0x1A	OSCCAL20M0	7:0		OSCCAL20M[6:0]						
0x1B	OSCCAL20M1	7:0					OSCCAL20MTCAL[3:0]			
0x1C ... 0x1F	Reserved									
0x20	TEMPSENSE0	7:0	TEMPSENSE[7:0]							
0x21	TEMPSENSE1	7:0	TEMPSENSE[7:0]							
0x22	OSC16ERR3V	7:0	OSC16ERR3V[7:0]							
0x23	OSC16ERR5V	7:0	OSC16ERR5V[7:0]							
0x24	OSC20ERR3V	7:0	OSC20ERR3V[7:0]							
0x25	OSC20ERR5V	7:0	OSC20ERR5V[7:0]							

5.7.2 Signature Row Description

5.7.2.1 Device ID n

Name: DEVICEIDn
Offset: 0x00 + n*0x01 [n=0..2]
Reset: [Device ID]
Property: -

Each device has a device ID identifying the device and its properties; such as memory sizes, pin count, and die revision. This can be used to identify a device and hence, the available features by software. The Device ID consists of three bytes: SIGROW.DEVICEID[2:0].

Bit	7	6	5	4	3	2	1	0
	DEVICEID[7:0]							
Access	R	R	R	R	R	R	R	R
Reset	x	x	x	x	x	x	x	x

Bits 7:0 – DEVICEID[7:0] Byte n of the Device ID

5.7.2.2 Serial Number Byte n

Name: SERNUMn
Offset: 0x03 + n*0x01 [n=0..9]
Reset: [device serial number]
Property: -

Each device has an individual serial number, representing a unique ID. This can be used to identify a specific device in the field. The serial number consists of ten bytes: SIGROW.SERNUM[9:0].

Bit	7	6	5	4	3	2	1	0
	SERNUM[7:0]							
Access	R	R	R	R	R	R	R	R
Reset	x	x	x	x	x	x	x	x

Bits 7:0 – SERNUM[7:0] Serial Number Byte n

5.7.2.3 OSC16 Calibration byte

Name: OSCCAL16M0
Offset: 0x18
Reset: [Factory oscillator calibration value]
Property: -

Bit	7	6	5	4	3	2	1	0
		OSCCAL16M[6:0]						
Access		R	R	R	R	R	R	R
Reset		x	x	x	x	x	x	x

Bits 6:0 – OSCCAL16M[6:0] OSC16 Calibration
These bits contains factory calibration values for the internal 16 MHz oscillator. If the OSCCFG fuse is configured to run the device at 16 MHz, this byte is automatically copied to the OSC20MCALIBA register during Reset to calibrate the internal 16 MHz RC Oscillator.

5.7.2.4 OSC16 Temperature Calibration byte

Name: OSCCAL16M1
Offset: 0x19
Reset: [Factory oscillator temperature calibration value]
Property: -

Bit	7	6	5	4	3	2	1	0
					OSCCAL16MTCAL[3:0]			
Access					R	R	R	R
Reset					x	x	x	x

Bits 3:0 – OSCCAL16MTCAL[3:0] OSC16 Temperature Calibration
These bits contain factory temperature calibration values for the internal 16 MHz oscillator. If the OSCCFG fuse is configured to run the device at 16 MHz, this byte is automatically written into the OSC20MCALIBB register during Reset to ensure correct frequency of the calibrated RC Oscillator.

5.7.2.5 OSC20 Calibration byte

Name: OSCCAL20M0
Offset: 0x1A
Reset: [Factory oscillator calibration value]
Property: -

Bit	7	6	5	4	3	2	1	0
		OSCCAL20M[6:0]						
Access		R	R	R	R	R	R	R
Reset		x	x	x	x	x	x	x

Bits 6:0 – OSCCAL20M[6:0] OSC20 Calibration
These bits contain factory calibration values for the internal 20 MHz oscillator. If the OSCCFG fuse is configured to run the device at 20 MHz, this byte is automatically written into the OSC20MCALIBA register during Reset to ensure correct frequency of the calibrated RC Oscillator.

5.7.2.6 OSC20 Temperature Calibration byte

Name: OSCCAL20M1
Offset: 0x1B
Reset: [Factory oscillator temperature calibration value]
Property: -

Bit	7	6	5	4	3	2	1	0
					OSCCAL20MTCAL[3:0]			
Access					R	R	R	R
Reset					x	x	x	x

Bits 3:0 – OSCCAL20MTCAL[3:0] OSC20 Temperature Calibration
These bits contain factory temperature calibration values for the internal 20 MHz oscillator. If the OSCCFG fuse is configured to run the device at 20 MHz, this byte is automatically written into the OSC20MCALIBB register during Reset to ensure correct frequency of the calibrated RC Oscillator.

5.7.2.7 Temperature Sensor Calibration n

Name: TEMPSENSEn
Offset: 0x20 + n*0x01 [n=0..1]
Reset: [Temperature sensor calibration value]
Property: -

These bytes contain correction factors for temperature measurements by the ADC. SIGROW.TEMPSENSE0 is a correction factor for the gain/slope (unsigned) and SIGROW.TEMPSENSE1 is a correction factor for the offset (signed).

Bit	7	6	5	4	3	2	1	0
	TEMPSENSE[7:0]							
Access	R	R	R	R	R	R	R	R
Reset	x	x	x	x	x	x	x	x

Bits 7:0 – TEMPSENSE[7:0] Temperature Sensor Calibration Byte n
Refer to the ADC chapter for a description on how to use this register.

5.7.2.8 OSC16 Error at 3V

Name: OSC16ERR3V
Offset: 0x22
Reset: [Oscillator frequency error value]
Property: -

Bit	7	6	5	4	3	2	1	0
	OSC16ERR3V[7:0]							
Access	R	R	R	R	R	R	R	R
Reset	x	x	x	x	x	x	x	x

Bits 7:0 – OSC16ERR3V[7:0] OSC16 Error at 3V
This byte contains the signed oscillator frequency error value when running at internal 16 MHz at 3V, as measured during production.

5.7.2.9 OSC16 Error at 5V

Name: OSC16ERR5V
Offset: 0x23
Reset: [Oscillator frequency error value]
Property: -

Bit	7	6	5	4	3	2	1	0
	OSC16ERR5V[7:0]							
Access	R	R	R	R	R	R	R	R
Reset	x	x	x	x	x	x	x	x

Bits 7:0 – OSC16ERR5V[7:0] OSC16 Error at 5V
This byte contains the signed oscillator frequency error value when running at internal 16 MHz at 5V, as measured during production.

5.7.2.10 OSC20 Error at 3V

Name: OSC20ERR3V
Offset: 0x24
Reset: [Oscillator frequency error value]
Property: -

Bit	7	6	5	4	3	2	1	0
	OSC20ERR3V[7:0]							
Access	R	R	R	R	R	R	R	R
Reset	x	x	x	x	x	x	x	x

Bits 7:0 – OSC20ERR3V[7:0] OSC20 Error at 3V
This byte contains the signed oscillator frequency error value when running at internal 20 MHz at 3V, as measured during production.

5.7.2.11 OSC20 Error at 5V

Name: OSC20ERR5V
Offset: 0x25
Reset: [Oscillator frequency error value]
Property: -

Bit	7	6	5	4	3	2	1	0
	OSC20ERR5V[7:0]							
Access	R	R	R	R	R	R	R	R
Reset	x	x	x	x	x	x	x	x

Bits 7:0 – OSC20ERR5V[7:0] OSC20 Error at 5V
This byte contains the signed oscillator frequency error value when running at internal 20 MHz at 5V, as measured during production.

5.8 Fuses (FUSE)

Fuses hold the device configuration and are a part of the nonvolatile memory. The fuses are available from device power-up. The fuses can be read by the CPU or the UPDI, but can only be programmed or cleared by the UPDI. The configuration values stored in the fuses are copied to their respective target registers at the end of the start-up sequence.

The fuses are preprogrammed but can be altered by the user. Altered fuse values will be effective only after a Reset.
Note: When writing the fuses, all reserved bits must be written to '0'.

5.8.1 Fuse Summary - FUSE

Offset	Name	Bit Pos.								
0x00	WDTCFG	7:0	WINDOW[3:0]				PERIOD[3:0]			
0x01	BODCFG	7:0	LVL[2:0]			SAMPFREQ	ACTIVE[1:0]		SLEEP[1:0]	
0x02	OSCCFG	7:0	OSCLOCK						FREQSEL[1:0]	
0x03 ... 0x04	Reserved									
0x05	SYSCFG0	7:0	CRCSRC[1:0]				RSTPINCFG			EESAVE
0x06	SYSCFG1	7:0						SUT[2:0]		
0x07	APPEND	7:0	APPEND[7:0]							
0x08	BOOTEND	7:0	BOOTEND[7:0]							
0x09	Reserved									
0x0A	LOCKBIT	7:0	LOCKBIT[7:0]							

5.8.2 Fuse Description

5.8.2.1 Watchdog Configuration

Name: WDTCFG
Offset: 0x00
Reset: Initial factory value 0x00
Property: -

Bit	7	6	5	4	3	2	1	0
	WINDOW[3:0]				PERIOD[3:0]			
Access	R	R	R	R	R	R	R	R
Reset	x	x	x	x	x	x	x	x

Bits 7:4 – WINDOW[3:0] Watchdog Window Time-out Period
This value is loaded into the WINDOW bit field of the Watchdog Control A (WDT.CTRLA) register during Reset.

Bits 3:0 – PERIOD[3:0] Watchdog Time-out Period
This value is loaded into the PERIOD bit field of the Watchdog Control A (WDT.CTRLA) register during Reset.

5.8.2.2 BOD Configuration

Name: BODCFG
Offset: 0x01
Reset: Initial factory value 0x00
Property: -

The settings of the BOD will be reloaded from this Fuse after a Power-on Reset. For all other Resets, the BOD configuration remains unchanged.

Bit	7	6	5	4	3	2	1	0
	LVL[2:0]			SAMPFREQ	ACTIVE[1:0]		SLEEP[1:0]	
Access	R	R	R	R	R	R	R	R
Reset	x	x	x	x	x	x	x	x

Bits 7:5 – LVL[2:0] BOD Level
This value is loaded into the LVL bit field of the BOD Control B (BOD.CTRLB) register during Reset.

Value	Name	Description
0x0	BODLEVEL0	1.8V
0x2	BODLEVEL2	2.6V
0x7	BODLEVEL7	4.3V
Other	-	Reserved

Note:
- Refer to *BOD and POR Characteristics* in the *Electrical Characteristics* section for further details
- Values in the description are typical values

Bit 4 – SAMPFREQ BOD Sample Frequency
This value is loaded into the SAMPFREQ bit of the BOD Control A (BOD.CTRLA) register during Reset.

Value	Description
0x0	Sample frequency is 1 kHz
0x1	Sample frequency is 125 Hz

Bits 3:2 – ACTIVE[1:0] BOD Operation Mode in Active and Idle
This value is loaded into the ACTIVE bit field of the BOD Control A (BOD.CTRLA) register during Reset.

Value	Description
0x0	Disabled
0x1	Enabled
0x2	Sampled
0x3	Enabled with wake-up halted until BOD is ready

Bits 1:0 – SLEEP[1:0] BOD Operation Mode in Sleep
This value is loaded into the SLEEP bit field of the BOD Control A (BOD.CTRLA) register during Reset.

Value	Description
0x0	Disabled
0x1	Enabled
0x2	Sampled
0x3	Reserved

5.8.2.3 Oscillator Configuration

Name: OSCCFG
Offset: 0x02
Reset: Initial factory value 0x02
Property: -

Bit	7	6	5	4	3	2	1	0
	OSCLOCK						FREQSEL[1:0]	
Access	R						R	R
Reset	x						x	x

Bit 7 – OSCLOCK Oscillator Lock
This fuse bit is loaded to LOCK in CLKCTRL.OSC20MCALIBB during Reset.

Value	Description
0x0	Calibration registers of the 20 MHz oscillator can be modified at run-time
0x1	Calibration registers of the 20 MHz oscillator are locked at run-time

Bits 1:0 – FREQSEL[1:0] Frequency Select
These bits select the operation frequency of the internal RC Oscillator (OSC20M) and determine the respective factory calibration values to be written to CAL20M in CLKCTRL.OSC20MCALIBA and TEMPCAL20M in CLKCTRL.OSC20MCALIBB.

Value	Description
0x0	Reserved
0x1	Run at 16 MHz
0x2	Run at 20 MHz
0x3	Reserved

5.8.2.4 System Configuration 0

Name: SYSCFG0
Offset: 0x05
Reset: Initial factory value 0xC0
Property: -

Bit	7	6	5	4	3	2	1	0
	CRCSRC[1:0]				RSTPINCFG			EESAVE
Access	R	R			R			R
Reset	x	x			x			x

Bits 7:6 – CRCSRC[1:0] CRC Source
See the CRC description for more information about the functionality.

Value	Name	Description
0x0	FLASH	CRC of full Flash (boot, application code, and application data)
0x1	BOOT	CRC of boot section
0x2	BOOTAPP	CRC of application code and boot sections
0x3	NOCRC	No CRC

Bit 3 – RSTPINCFG Reset Pin Configuration
This bit selects the pin configuration for the Reset pin.

Value	Description
0x0	GPIO
0x1	RESET

Bit 0 – EESAVE EEPROM Save During Chip Erase
If the device is locked, the EEPROM is always erased by a chip erase, regardless of this bit.

Value	Description
0x0	EEPROM erased by chip erase
0x1	EEPROM not erased by chip erase

5.8.2.5 System Configuration 1

Name: SYSCFG1
Offset: 0x06
Reset: Initial factory value 0x07
Property: -

Bit	7	6	5	4	3	2	1	0
						SUT[2:0]		
Access						R	R	R
Reset						x	x	x

Bits 2:0 – SUT[2:0] Start-Up Time Setting
These bits select the start-up time between power-on and code execution.

Value	Description
0x0	0 ms
0x1	1 ms
0x2	2 ms
0x3	4 ms
0x4	8 ms
0x5	16 ms
0x6	32 ms
0x7	64 ms

5.8.2.6 Application Code End

Name: APPEND
Offset: 0x07
Reset: Initial factory value 0x00
Property: -

Bit	7	6	5	4	3	2	1	0
	APPEND[7:0]							
Access	R	R	R	R	R	R	R	R
Reset	x	x	x	x	x	x	x	x

Bits 7:0 – APPEND[7:0] Application Code Section End
These bits set the end of the application code section in blocks of 256 bytes. The end of the application code section should be set as BOOT size plus application code size. The remaining Flash will be application data. A value of 0x00 defines the Flash from BOOTEND*256 to the end of Flash as the application code section. When both FUSE.APPEND and FUSE.BOOTEND are 0x00 the entire Flash is BOOT section.

5.8.2.7 Boot End

Name: BOOTEND
Offset: 0x08
Reset: Initial factory value 0x00
Property: -

Bit	7	6	5	4	3	2	1	0
	BOOTEND[7:0]							
Access	R	R	R	R	R	R	R	R
Reset	x	x	x	x	x	x	x	x

Bits 7:0 – BOOTEND[7:0] Boot Section End
These bits set the end of the boot section in blocks of 256 bytes. A value of 0x00 defines the whole Flash as BOOT section. When both FUSE.APPEND and FUSE.BOOTEND are 0x00 the entire Flash is BOOT section.

5.8.2.8 Lockbits

Name: LOCKBIT
Offset: 0x0A
Reset: Initial factory value 0xC5
Property: -

Bit	7	6	5	4	3	2	1	0
	LOCKBIT[7:0]							
Access	R	R	R	R	R	R	R	R
Reset	x	x	x	x	x	x	x	x

Bits 7:0 – LOCKBIT[7:0] Lockbits
The UPDI cannot access the system bus when the part is locked. The UPDI can then only read the internal Control and Status (CS) space of the UPDI and the Asynchronous System Interface (ASI). Refer to the *UPDI* section for additional details.

Value	Description
`0xC5`	Valid key - the device is open
`other`	Invalid key - the device is locked

5.9 Memory Section Access from CPU and UPDI on Locked Device

The device can be locked so that the memories cannot be read using the UPDI. The locking protects both the Flash (all BOOT, APPCODE, and APPDATA sections), SRAM, and the EEPROM including the FUSE data. This prevents successful reading of application data or code using the debugger interface. Regular memory access from within the application still is enabled.

The device is locked by writing any invalid key to the LOCKBIT bit field in FUSE.LOCKBIT.

Table 5-5. Memory Access in Unlocked Mode (FUSE.LOCKBIT Valid)(1)

Memory Section	CPU Access		UPDI Access	
	Read	Write	Read	Write
SRAM	Yes	Yes	Yes	Yes
Registers	Yes	Yes	Yes	Yes
Flash	Yes	Yes	Yes	Yes
EEPROM	Yes	Yes	Yes	Yes
USERROW	Yes	Yes	Yes	Yes
SIGROW	Yes	No	Yes	No
Other Fuses	Yes	No	Yes	Yes

Table 5-6. Memory Access in Locked Mode (FUSE.LOCKBIT Invalid)(1)

Memory Section	CPU Access		UPDI Access	
	Read	Write	Read	Write
SRAM	Yes	Yes	No	No
Registers	Yes	Yes	No	No
Flash	Yes	Yes	No	No
EEPROM	Yes	Yes	No	No

.....continued

Memory Section	CPU Access		UPDI Access	
	Read	Write	Read	Write
USERROW	Yes	Yes	No	Yes(2)
SIGROW	Yes	No	No	No
Other Fuses	Yes	No	No	No

Note:

1. Read operations marked No in the tables may appear to be successful, but the data is corrupt. Hence, any attempt of code validation through the UPDI will fail on these memory sections.
2. In Locked mode, the USERROW can be written blindly using the Fuse Write command, but the current USERROW values cannot be read out.

Important: The only way to unlock a device is a CHIPERASE, which will erase all device memories to factory default so that no application data is retained.

5.10 I/O Memory

All ATmega808/809/1608/1609/3208/3209/4808/4809 I/Os and peripherals are located in the I/O space. The I/O address range from 0x00 to 0x3F can be accessed in a single cycle using `IN` and `OUT` instructions. The extended I/O space from 0x0040 - 0x0FFF can be accessed by the `LD/LDS/LDD` and `ST/STS/STD` instructions, transferring data between the 32 general purpose working registers and the I/O space.

I/O registers within the address range 0x00 - 0x1F are directly bit-accessible using the `SBI` and `CBI` instructions. In these registers, the value of single bits can be checked by using the `SBIS` and `SBIC` instructions. Refer to the Instruction Set section for more details.

For compatibility with future devices, reserved bits should be written to `'0'` if accessed. Reserved I/O memory addresses should never be written.

Some of the interrupt flags are cleared by writing a `'1'` to them. On ATmega808/809/1608/1609/3208/3209/4808/4809 devices, the `CBI` and `SBI` instructions will only operate on the specified bit, and can, therefore, be used on registers containing such interrupt flags. The `CBI` and `SBI` instructions work with registers 0x00 - 0x1F only.

General Purpose I/O Registers

The ATmega808/809/1608/1609/3208/3209/4808/4809 devices provide four General Purpose I/O Registers. These registers can be used for storing any information, and they are particularly useful for storing global variables and interrupt flags. General Purpose I/O Registers, which reside in the address range 0x1C - 0x1F, are directly bit-accessible using the `SBI`, `CBI`, `SBIS`, and `SBIC` instructions.

5.10.1 Register Summary - GPIOR

Offset	Name	Bit Pos.								
0x00	GPIOR0	7:0	GPIOR[7:0]							
0x01	GPIOR1	7:0	GPIOR[7:0]							
0x02	GPIOR2	7:0	GPIOR[7:0]							
0x03	GPIOR3	7:0	GPIOR[7:0]							

5.10.2 Register Description - GPIOR

5.10.2.1 General Purpose I/O Register n

Name: GPIOR
Offset: 0x00 + n*0x01 [n=0..3]
Reset: 0x00
Property: -

These are general purpose registers that can be used to store data, such as global variables and flags, in the bit accessible I/O memory space.

Bit	7	6	5	4	3	2	1	0
	GPIOR[7:0]							
Access	R/W	R/W	R/W	R/W	R/W	R/W	R/W	R/W
Reset	0	0	0	0	0	0	0	0

Bits 7:0 – GPIOR[7:0] GPIO Register Byte

6. Peripherals and Architecture

6.1 Peripheral Module Address Map

The address map shows the base address for each peripheral. For complete register description and summary for each peripheral module, refer to the respective module chapters.

Table 6-1. Peripheral Module Address Map

Base Address	Name	Description	28-Pin	32-Pin	40-Pin	48-Pin
0x0000	VPORTA	Virtual Port A	X	X	X	X
0x0004	VPORTB	Virtual Port B				X
0x0008	VPORTC	Virtual Port C	X	X	X	X
0x000C	VPORTD	Virtual Port D	X	X	X	X
0x0010	VPORTE	Virtual Port E			X	X
0x0014	VPORTF	Virtual Port F	X	X	X	X
0x001C	GPIO	General Purpose I/O registers	X	X	X	X
0x0030	CPU	CPU	X	X	X	X
0x0040	RSTCTRL	Reset Controller	X	X	X	X
0x0050	SLPCTRL	Sleep Controller	X	X	X	X
0x0060	CLKCTRL	Clock Controller	X	X	X	X
0x0080	BOD	Brown-out Detector	X	X	X	X
0x00A0	VREF	Voltage Reference	X	X	X	X
0x0100	WDT	Watchdog Timer	X	X	X	X
0x0110	CPUINT	Interrupt Controller	X	X	X	X
0x0120	CRCSCAN	Cyclic Redundancy Check Memory Scan	X	X	X	X
0x0140	RTC	Real-Time Counter	X	X	X	X
0x0180	EVSYS	Event System	X	X	X	X
0x01C0	CCL	Configurable Custom Logic	X	X	X	X
0x0400	PORTA	Port A Configuration	X	X	X	X
0x0420	PORTB	Port B Configuration				X

.....continued

Base Address	Name	Description	28-Pin	32-Pin	40-Pin	48-Pin
0x0440	PORTC	Port C Configuration	X	X	X	X
0x0460	PORTD	Port D Configuration	X	X	X	X
0x0480	PORTE	Port E Configuration			X	X
0x04A0	PORTF	Port F Configuration	X	X	X	X
0x05E0	PORTMUX	Port Multiplexer	X	X	X	X
0x0600	ADC0	Analog-to-Digital Converter	X	X	X	X
0x0680	AC0	Analog Comparator 0	X	X	X	X
0x0800	USART0	Universal Synchronous Asynchronous Receiver Transmitter 0	X	X	X	X
0x0820	USART1	Universal Synchronous Asynchronous Receiver Transmitter 1	X	X	X	X
0x0840	USART2	Universal Synchronous Asynchronous Receiver Transmitter 2	X	X	X	X
0x0860	USART3	Universal Synchronous Asynchronous Receiver Transmitter 3			X	X
0x08A0	TWI0	Two-Wire Interface	X	X	X	X
0x08C0	SPI0	Serial Peripheral Interface	X	X	X	X
0x0A00	TCA0	Timer/Counter Type A instance 0	X	X	X	X
0x0A80	TCB0	Timer/Counter Type B instance 0	X	X	X	X
0x0A90	TCB1	Timer/Counter Type B instance 1	X	X	X	X

.....continued

Base Address	Name	Description	28-Pin	32-Pin	40-Pin	48-Pin
0x0AA0	TCB2	Timer/Counter Type B instance 2	X	X	X	X
0x0AB0	TCB3	Timer/Counter Type B instance 3			X	X
0x0F00	SYSCFG	System Configuration	X	X	X	X
0x1000	NVMCTRL	Nonvolatile Memory Controller	X	X	X	X
0x1100	SIGROW	Signature Row	X	X	X	X
0x1280	FUSE	Device-specific fuses	X	X	X	X
0x1300	USERROW	User Row	X	X	X	X

6.2 Interrupt Vector Mapping

Each of the interrupt vectors is connected to one peripheral instance, as shown in the table below. A peripheral can have one or more interrupt sources. See the 'Interrupts' section in the 'Functional Description' of the respective peripheral for more details on the available interrupt sources.

When the interrupt condition occurs, an Interrupt Flag is set in the Interrupt Flags register of the peripheral (*peripheral*.INTFLAGS).

An interrupt is enabled or disabled by writing to the corresponding Interrupt Enable bit in the peripheral's Interrupt Control register (*peripheral*.INTCTRL).

An interrupt request is generated when the corresponding interrupt is enabled and the Interrupt Flag is set. The interrupt request remains active until the Interrupt Flag is cleared. See the peripheral's INTFLAGS register for details on how to clear Interrupt Flags.

Note: Interrupts must be enabled globally for interrupt requests to be generated.

Table 6-2. Interrupt Vector Mapping

Vector Number	Vector Address		Peripheral Source	28-Pin	32-Pin	40-Pin	48-Pin
	Program Memory≤8 KB	Program Memory>8 KB					
0	0x00	0x00	RESET	X	X	X	X
1	0x01	0x02	NMI - Non-Maskable Interrupt from CRC	X	X	X	X
2	0x02	0x04	VLM - Voltage Level Monitor	X	X	X	X
3	0x03	0x06	RTC - Overflow or compare match	X	X	X	X
4	0x04	0x08	PIT - Periodic interrupt	X	X	X	X
5	0x05	0x0A	CCL - Configurable Custom Logic	X	X	X	X
6	0x06	0x0C	PORTA - External interrupt	X	X	X	X
7	0x07	0x0E	TCA0 - Overflow	X	X	X	X

.....continued

Vector Number	Vector Address		Peripheral Source	28-Pin	32-Pin	40-Pin	48-Pin
	Program Memory≤8 KB	Program Memory>8 KB					
8	0x08	0x10	TCA0 - Underflow (Split mode)	X	X	X	X
9	0x09	0x12	TCA0 - Compare channel 0	X	X	X	X
10	0x0A	0x14	TCA0 - Compare channel 1	X	X	X	X
11	0x0B	0x16	TCA0 - Compare channel 2	X	X	X	X
12	0x0C	0x18	TCB0 - Capture	X	X	X	X
13	0x0D	0x1A	TCB1 - Capture	X	X	X	X
14	0x0E	0x1C	TWI0 - Slave	X	X	X	X
15	0x0F	0x1E	TWI0 - Master	X	X	X	X
16	0x10	0x20	SPI0 - Serial Peripheral Interface 0	X	X	X	X
17	0x11	0x22	USART0 - Receive Complete	X	X	X	X
18	0x12	0x24	USART0 - Data Register Empty	X	X	X	X
19	0x13	0x26	USART0 - Transmit Complete	X	X	X	X
20	0x14	0x28	PORTD - External interrupt	X	X	X	X
21	0x15	0x2A	AC0 – Compare	X	X	X	X
22	0x16	0x2C	ADC0 – Result Ready	X	X	X	X
23	0x17	0x2E	ADC0 - Window Compare	X	X	X	X
24	0x18	0x30	PORTC - External interrupt	X	X	X	X
25	0x19	0x32	TCB2 - Capture	X	X	X	X
26	0x1A	0x34	USART1 - Receive Complete	X	X	X	X
27	0x1B	0x36	USART1 - Data Register Empty	X	X	X	X
28	0x1C	0x38	USART1 - Transmit Complete	X	X	X	X
29	0x1D	0x3A	PORTF - External interrupt	X	X	X	X
30	0x1E	0x3C	NVM - Ready	X	X	X	X
31	0x1F	0x3E	USART2 - Receive Complete	X	X	X	X
32	0x20	0x40	USART2 - Data Register Empty	X	X	X	X
33	0x21	0x42	USART2 - Transmit Complete	X	X	X	X
34	0x22	0x44	PORTB - External interrupt				X
35	0x23	0x46	PORTE - External interrupt			X	X
36	0x24	0x48	TCB3 - Capture			X	X
37	0x25	0x4A	USART3 - Receive Complete			X	X
38	0x26	0x4C	USART3 - Data Register Empty			X	X
39	0x27	0x4E	USART3 - Transmit Complete			X	X

6.3 System Configuration (SYSCFG)

The system configuration contains the revision ID of the part. The revision ID is readable from the CPU, making it useful for implementing application changes between part revisions.

6.3.1 Register Summary - SYSCFG

Offset	Name	Bit Pos.								
0x01	REVID	7:0	REVID[7:0]							

6.3.2 Register Description - SYSCFG

6.3.2.1 Device Revision ID Register

Name: REVID
Offset: 0x01
Reset: [revision ID]
Property: -

This register is read-only and displays the device revision ID.

Bit	7	6	5	4	3	2	1	0
	REVID[7:0]							
Access	R	R	R	R	R	R	R	R
Reset								

Bits 7:0 – REVID[7:0] Revision ID
These bits contain the device revision. 0x00 = A, 0x01 = B, and so on.

7. AVR CPU

7.1 Features

- 8-bit, high-performance AVR RISC CPU
  - 135 instructions
  - Hardware multiplier
- 32 8-bit registers directly connected to the ALU
- Stack in RAM
- Stack Pointer accessible in I/O memory space
- Direct addressing of up to 64 KB of unified memory
- Efficient support for 8-, 16-, and 32-bit arithmetic
- Configuration Change Protection for system-critical features
- Native On-Chip Debugging (OCD) support
  - Two hardware breakpoints
  - Change of flow, interrupt, and software breakpoints
  - Run-time readout of Stack Pointer (SP) register, Program Counter (PC), and Status register
  - Register file read- and writable in stopped mode

7.2 Overview

All AVR devices use the AVR 8-bit CPU. The CPU is able to access memories, perform calculations, control peripherals, and execute instructions in the program memory. Interrupt handling is described in a separate section.

7.3 Architecture

In order to maximize performance and parallelism, the AVR CPU uses a Harvard architecture with separate buses for program and data. Instructions in the program memory are executed with a single-level pipeline. While one instruction is being executed, the next instruction is pre-fetched from the program memory. This enables instructions to be executed on every clock cycle.

Refer to the Instruction Set Summary chapter for a summary of all AVR instructions.

Figure 7-1. AVR CPU Architecture

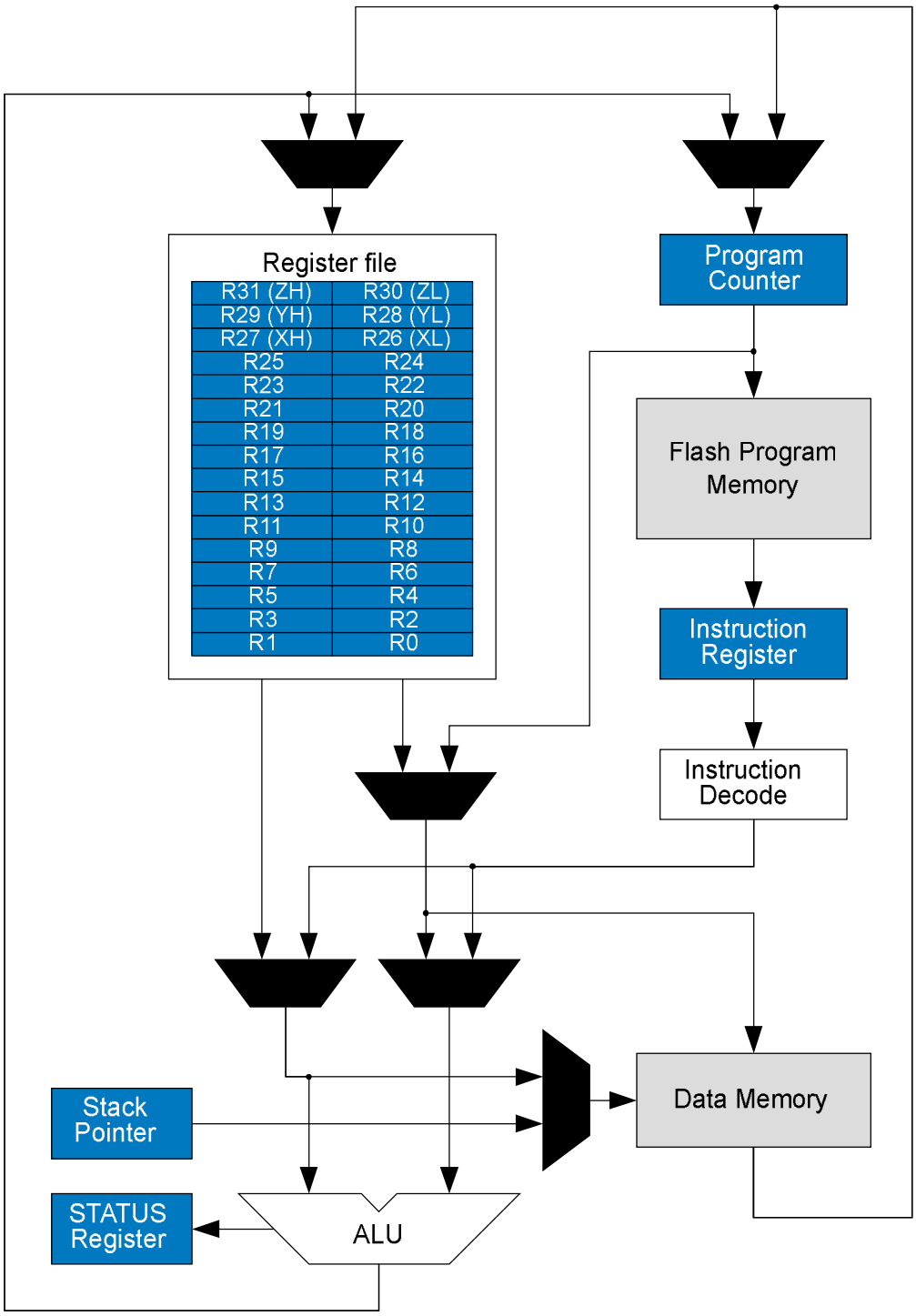

7.4 Arithmetic Logic Unit (ALU)

The Arithmetic Logic Unit (ALU) supports arithmetic and logic operations between registers, or between a constant and a register. Also, single-register operations can be executed.

The ALU operates in direct connection with all 32 general purpose registers. Arithmetic operations between general purpose registers or between a register and an immediate are executed in a single clock cycle, and the result is

stored in the register file. After an arithmetic or logic operation, the Status register (CPU.SREG) is updated to reflect information about the result of the operation.

ALU operations are divided into three main categories – arithmetic, logical, and bit functions. Both 8- and 16-bit arithmetic are supported, and the instruction set allows for efficient implementation of 32-bit arithmetic. The hardware multiplier supports signed and unsigned multiplication and fractional format.

7.4.1 Hardware Multiplier

The multiplier is capable of multiplying two 8-bit numbers into a 16-bit result. The hardware multiplier supports different variations of signed and unsigned integer and fractional numbers:

- Multiplication of signed/unsigned integers
- Multiplication of signed/unsigned fractional numbers
- Multiplication of a signed integer with an unsigned integer
- Multiplication of a signed fractional number with an unsigned fractional number

A multiplication takes two CPU clock cycles.

7.5 Functional Description

7.5.1 Program Flow

After reset, the CPU will execute instructions from the lowest address in the Flash program memory, 0x0000. The Program Counter (PC) addresses the next instruction to be fetched.

Program flow is supported by conditional and unconditional `JUMP` and `CALL` instructions, capable of addressing the whole address space directly. Most AVR instructions use a 16-bit word format, and a limited number use a 32-bit format.

During interrupts and subroutine calls, the return address PC is stored on the stack as a word pointer. The stack is allocated in the general data SRAM, and consequently, the stack size is only limited by the total SRAM size and the usage of the SRAM. After reset, the Stack Pointer (SP) points to the highest address in the internal SRAM. The SP is read/write accessible in the I/O memory space, enabling easy implementation of multiple stacks or stack areas. The data SRAM can easily be accessed through the five different addressing modes supported by the AVR CPU.

7.5.2 Instruction Execution Timing

The AVR CPU is clocked by the CPU clock, CLK_CPU. No internal clock division is applied. The figure below shows the parallel instruction fetches and executions enabled by the Harvard architecture and the fast-access register file concept. This is the basic pipelining concept enabling up to 1 MIPS/MHz performance with high efficiency.

Figure 7-2. The Parallel Instruction Fetches and Executions

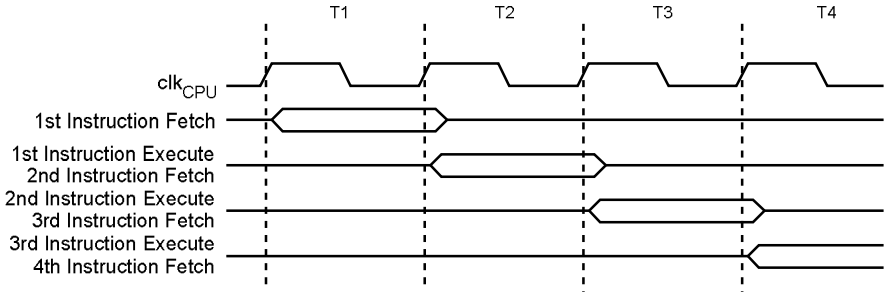

The following figure shows the internal timing concept for the register file. In a single clock cycle, an ALU operation using two register operands is executed, and the result is stored in the destination register.

Figure 7-3. Single Cycle ALU Operation

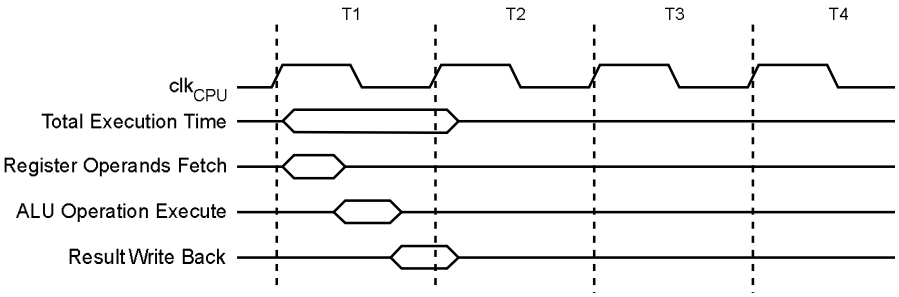

7.5.3 Status Register

The Status register (CPU.SREG) contains information about the result of the most recently executed arithmetic or logic instruction. This information can be used for altering the program flow in order to perform conditional operations.

CPU.SREG is updated after all ALU operations, as specified in the Instruction Set Summary section. This will in many cases remove the need for using the dedicated compare instructions, resulting in a faster and more compact code. CPU.SREG is not automatically stored/restored when entering/returning from an Interrupt Service Routine. Maintaining the Status register between context switches must, therefore, be handled by user-defined software. CPU.SREG is accessible in the I/O memory space.

7.5.4 Stack and Stack Pointer

The stack is used for storing return addresses after interrupts and subroutine calls. Also, it can be used for storing temporary data. The Stack Pointer (SP) always points to the top of the stack. The SP is defined by the Stack Pointer bits in the Stack Pointer register (CPU.SP). The CPU.SP is implemented as two 8-bit registers that are accessible in the I/O memory space.

Data are pushed and popped from the stack using the `PUSH` and `POP` instructions. The stack grows from higher to lower memory locations. This means that pushing data onto the stack decreases the SP, and popping data off the stack increases the SP. The SP is automatically set to the highest address of the internal SRAM after reset. If the stack is changed, it must be set to point above the SRAM start address (See the SRAM Data Memory section in the Memories chapter for the SRAM start address), and it must be defined before any subroutine calls are executed and before interrupts are enabled. See the table below for SP details.

Table 7-1. Stack Pointer Instructions

Instruction	Stack Pointer	Description
PUSH	Decremented by 1	Data are pushed onto the stack
CALL ICALL RCALL	Decremented by 2	A return address is pushed onto the stack with a subroutine call or interrupt
POP	Incremented by 1	Data are popped from the stack
RET RETI	Incremented by 2	A return address is popped from the stack with a return from subroutine or return from interrupt

During interrupts or subroutine calls the return address is automatically pushed on the stack as a word pointer, and the SP is decremented by '2'. The return address consists of two bytes and the Least Significant Byte is pushed on the stack first (at the higher address). As an example, a byte pointer return address of 0x0006 is saved on the stack as 0x0003 (shifted one bit to the right), pointing to the fourth 16-bit instruction word in the program memory. The return address is popped off the stack with `RETI` (when returning from interrupts) and `RET` (when returning from subroutine calls), and the SP is incremented by two.

The SP is decremented by '`1`' when data are pushed on the stack with the `PUSH` instruction, and incremented by '`1`' when data are popped off the stack using the `POP` instruction.

To prevent corruption when updating the SP from software, a write to SPL will automatically disable interrupts for up to four instructions or until the next I/O memory write, whichever comes first.

7.5.5 Register File

The register file consists of 32 8-bit general purpose working registers with single clock cycle access time. The register file supports the following input/output schemes:

- One 8-bit output operand and one 8-bit result input
- Two 8-bit output operands and one 8-bit result input
- Two 8-bit output operands and one 16-bit result input
- One 16-bit output operand and one 16-bit result input

Six of the 32 registers can be used as three 16-bit Address Register Pointers for data space addressing, enabling efficient address calculations.

Figure 7-4. AVR CPU General Purpose Working Registers

7 … 0	Addr.	
R0	0x00	
R1	0x01	
R2	0x02	
…		
R13	0x0D	
R14	0x0E	
R15	0x0F	
R16	0x10	
R17	0x11	
…		
R26	0x1A	X-register Low Byte
R27	0x1B	X-register High Byte
R28	0x1C	Y-register Low Byte
R29	0x1D	Y-register High Byte
R30	0x1E	Z-register Low Byte
R31	0x1F	Z-register High Byte

The register file is located in a separate address space and is, therefore, not accessible through instructions operation on data memory.

7.5.5.1 The X-, Y-, and Z-Registers

Registers R26...R31 have added functions besides their general purpose usage.

These registers can form 16-bit Address Pointers for addressing data memory. These three address registers are called the X-register, Y-register, and Z-register. Load and store instructions can use all X-, Y-, and Z-registers, while the `LPM` instructions can only use the Z-register. Indirect calls and jumps (`ICALL` and `IJMP`) also use the Z-register.

Refer to the instruction set or Instruction Set Summary for more information about how the X-, Y-, and Z-registers are used.

Figure 7-5. The X-, Y-, and Z-Registers

Bit (individually)	7	R27	0	7	R26	0
X-register	XH			XL		
Bit (X-register)	15		8	7		0
Bit (individually)	7	R29	0	7	R28	0
Y-register	YH			YL		
Bit (Y-register)	15		8	7		0
Bit (individually)	7	R31	0	7	R30	0
Z-register	ZH			ZL		
Bit (Z-register)	15		8	7		0

The lowest register address holds the Least Significant Byte (LSB), and the highest register address holds the Most Significant Byte (MSB). In the different addressing modes, these address registers function as fixed displacement, automatic increment, and automatic decrement.

7.5.6 Accessing 16-Bit Registers

The AVR data bus has a width of eight bits, and so accessing 16-bit registers requires atomic operations. These registers must be byte accessed using two read or write operations. 16-bit registers are connected to the 8-bit bus and a temporary register using a 16-bit bus.

For a write operation, the low byte of the 16-bit register must be written before the high byte. The low byte is then written into the temporary register. When the high byte of the 16-bit register is written, the temporary register is copied into the low byte of the 16-bit register in the same clock cycle.

For a read operation, the low byte of the 16-bit register must be read before the high byte. When the low byte register is read by the CPU, the high byte of the 16-bit register is copied into the temporary register in the same clock cycle as the low byte is read. The high byte will now be read from the temporary register.

This ensures that the low and high bytes of 16-bit registers are always accessed simultaneously when reading or writing the register.

Interrupts can corrupt the timed sequence if an interrupt is triggered and accesses the same 16-bit register during an atomic 16-bit read/write operation. To prevent this, interrupts can be disabled when writing or reading 16-bit registers.

The temporary registers can be read and written directly from user software.

7.5.7 Configuration Change Protection (CCP)

System critical I/O register settings are protected from accidental modification. Flash self-programming (via store to NVM controller) is protected from accidental execution. This is handled globally by the Configuration Change Protection (CCP) register.

Changes to the protected I/O registers or bits, or execution of protected instructions, are only possible after the CPU writes a signature to the CCP register. The different signatures are listed in the description of the CCP register (CPU.CCP).

There are two modes of operation: one for protected I/O registers, and one for protected self-programming.

7.5.7.1 Sequence for Write Operation to Configuration Change Protected I/O Registers

In order to write to registers protected by CCP, these steps are required:

1. The software writes the signature that enables change of protected I/O registers to the CCP bit field in the CPU.CCP register.
2. Within four instructions, the software must write the appropriate data to the protected register.
   Most protected registers also contain a Write Enable/Change Enable/Lock bit. This bit must be written to '1' in the same operation as the data are written.

   The protected change is immediately disabled if the CPU performs write operations to the I/O register or data memory, if load or store accesses to Flash, NVMCTRL, EEPROM are conducted, or if the `SLEEP` instruction is executed.

7.5.7.2 Sequence for Execution of Self-Programming

In order to execute self-programming (the execution of writes to the NVM controller's command register), the following steps are required:

1. The software temporarily enables self-programming by writing the SPM signature to the CCP register (CPU.CCP).
2. Within four instructions, the software must execute the appropriate instruction. The protected change is immediately disabled if the CPU performs accesses to the Flash, NVMCTRL, or EEPROM, or if the `SLEEP` instruction is executed.

Once the correct signature is written by the CPU, interrupts will be ignored for the duration of the configuration change enable period. Any interrupt request (including non-maskable interrupts) during the CCP period will set the corresponding interrupt flag as normal, and the request is kept pending. After the CCP period is completed, any pending interrupts are executed according to their level and priority.

7.5.8 On Chip Debug Capabilities

The AVR CPU includes native OCD support. It includes some powerful debug capabilities to enable profiling and detailed information about the CPU state. It is possible to alter the CPU state and resume code execution. In addition, normal debug capabilities like hardware Program Counter breakpoints, breakpoints on change of flow instructions, breakpoints on interrupts, and software breakpoints (BREAK instruction) are present. Refer to the Unified Program and Debug Interface (UPDI) chapter for details about OCD.

7.6 Register Summary - CPU

Offset	Name	Bit Pos.								
0x04	CCP	7:0	CCP[7:0]							
0x05 ... 0x0C	Reserved									
0x0D	SP	7:0	SP[7:0]							
		15:8	SP[15:8]							
0x0F	SREG	7:0	I	T	H	S	V	N	Z	C

7.7 Register Description

7.7.1 Configuration Change Protection

Name: CCP
Offset: 0x04
Reset: 0x00
Property: -

Bit	7	6	5	4	3	2	1	0
	CCP[7:0]							
Access	R/W	R/W	R/W	R/W	R/W	R/W	R/W	R/W
Reset	0	0	0	0	0	0	0	0

Bits 7:0 – CCP[7:0] Configuration Change Protection
Writing the correct signature to this bit field allows changing protected I/O registers or executing protected instructions within the next four CPU instructions executed.
All interrupts are ignored during these cycles. After these cycles, interrupts will automatically be handled again by the CPU, and any pending interrupts will be executed according to their level and priority.
When the protected I/O register signature is written, CCP[0] will read as '1' as long as the CCP feature is enabled.
When the protected self-programming signature is written, CCP[1] will read as '1' as long as the CCP feature is enabled.
CCP[7:2] will always read as '0'.

Value	Name	Description
0x9D	SPM	Allow Self-Programming
0xD8	IOREG	Un-protect protected I/O registers

7.7.2 Stack Pointer

Name: SP
Offset: 0x0D
Reset: Top of stack
Property: -

The CPU.SP holds the Stack Pointer (SP) that points to the top of the stack. After reset, the SP points to the highest internal SRAM address.

Only the number of bits required to address the available data memory including external memory (up to 64 KB) is implemented for each device. Unused bits will always read as '0'.

The CPU.SPL and CPU.SPH register pair represents the 16-bit value, CPU.SP. The low byte [7:0] (suffix L) is accessible at the original offset. The high byte [15:8] (suffix H) can be accessed at offset + 0x01.

To prevent corruption when updating the SP from software, a write to CPU.SPL will automatically disable interrupts for the next four instructions or until the next I/O memory write, whichever comes first.

Bit	15	14	13	12	11	10	9	8
	SP[15:8]							
Access	R/W	R/W	R/W	R/W	R/W	R/W	R/W	R/W
Reset								

Bit	7	6	5	4	3	2	1	0
	SP[7:0]							
Access	R/W	R/W	R/W	R/W	R/W	R/W	R/W	R/W
Reset								

Bits 15:8 – SP[15:8] Stack Pointer High Byte
These bits hold the MSB of the 16-bit register.

Bits 7:0 – SP[7:0] Stack Pointer Low Byte
These bits hold the LSB of the 16-bit register.

7.7.3 Status Register

Name: SREG
Offset: 0x0F
Reset: 0x00
Property: -

The Status register contains information about the result of the most recently executed arithmetic or logic instruction. For details about the bits in this register and how they are influenced by the different instructions, see the Instruction Set Summary chapter.

Bit	7	6	5	4	3	2	1	0
	I	T	H	S	V	N	Z	C
Access	R/W	R/W	R/W	R/W	R/W	R/W	R/W	R/W
Reset	0	0	0	0	0	0	0	0

Bit 7 – I Global Interrupt Enable
Writing a '1' to this bit enables interrupts on the device.
Writing a '0' to this bit disables interrupts on the device, independent of the individual interrupt enable settings of the peripherals.
This bit is not cleared by hardware after an interrupt has occurred.
This bit can be set and cleared by software with the `SEI` and `CLI` instructions.
Changing the I flag through the I/O register results in a one-cycle Wait state on the access.

Bit 6 – T Bit Copy Storage
The bit copy instructions Bit Load (`BLD`) and Bit Store (`BST`) use the T bit as source or destination for the operated bit. A bit from a register in the register file can be copied into this bit by the `BST` instruction, and this bit can be copied into a bit in a register in the register file by the `BLD` instruction.

Bit 5 – H Half Carry Flag
This bit indicates a half carry in some arithmetic operations. Half carry is useful in BCD arithmetic.

Bit 4 – S Sign Bit, $S = N \oplus V$
The Sign bit (S) is always an Exclusive Or (*XOR*) between the Negative flag (N) and the Two's Complement Overflow flag (V).

Bit 3 – V Two's Complement Overflow Flag
The Two's Complement Overflow flag (V) supports two's complement arithmetic.

Bit 2 – N Negative Flag
The Negative flag (N) indicates a negative result in an arithmetic or logic operation.

Bit 1 – Z Zero Flag
The Zero flag (Z) indicates a zero result in an arithmetic or logic operation.

Bit 0 – C Carry Flag
The Carry flag (C) indicates a carry in an arithmetic or logic operation.

8. NVMCTRL - Nonvolatile Memory Controller

8.1 Features

- Unified Memory
- In-System Programmable
- Self-Programming and Boot Loader Support
- Configurable Sections for Write Protection:
  - Boot section for boot loader code or application code
  - Application code section for application code
  - Application data section for application code or data storage
- Signature Row for Factory-Programmed Data:
  - ID for each device type
  - Serial number for each device
  - Calibration bytes for factory calibrated peripherals
- User Row for Application Data:
  - Can be read and written from software
  - Can be written from UPDI on locked device
  - Content is kept after chip erase

8.2 Overview

The NVM Controller (NVMCTRL) is the interface between the device, the Flash, and the EEPROM. The Flash and EEPROM are reprogrammable memory blocks that retain their values even when not powered. The Flash is mainly used for program storage and can be used for data storage. The EEPROM is used for data storage and can be programmed while the CPU is running the program from the Flash.

8.2.1 Block Diagram

Figure 8-1. NVMCTRL Block Diagram

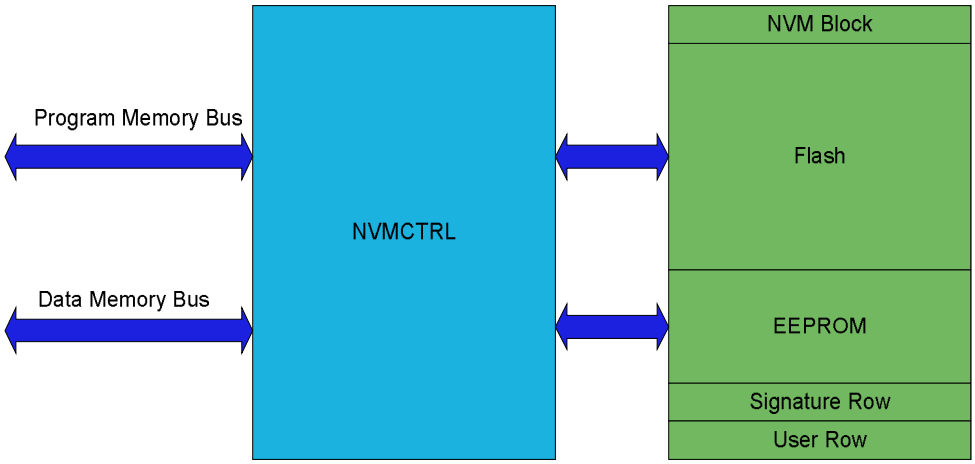

8.3 Functional Description

8.3.1 Memory Organization

8.3.1.1 Flash

The Flash is divided into a set of pages. A page is the basic unit addressed when programming the Flash. It is only possible to write or erase a whole page at a time. One page consists of several words.

The Flash can be divided into three sections in blocks of 256 bytes for different security. The three different sections are BOOT, Application Code (APPCODE), and Application Data (APPDATA).

Figure 8-2. Flash Sections

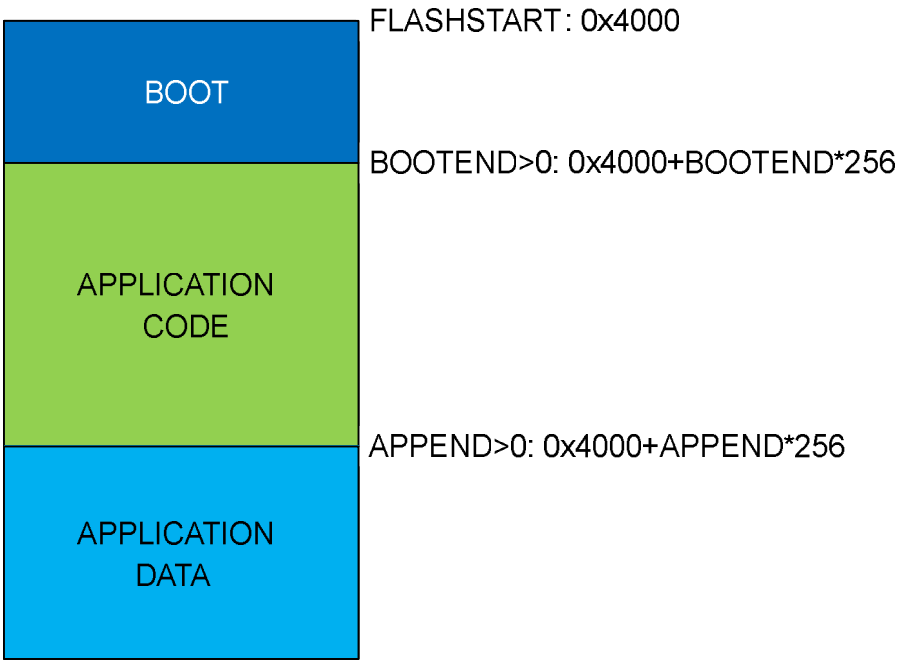

Section Sizes

The sizes of these sections are set by the Boot Section End fuse (FUSE.BOOTEND) and Application Code Section End fuse (FUSE.APPEND).

The fuses select the section sizes in blocks of 256 bytes. The BOOT section stretches from the start of the Flash until BOOTEND. The APPCODE section runs from BOOTEND until APPEND. The remaining area is the APPDATA section. If APPEND is written to 0, the APPCODE section runs from BOOTEND to the end of Flash (removing the APPDATA section). If BOOTEND and APPEND are written to 0, the entire Flash is regarded as BOOT section. APPEND should either be set to 0 or a value greater or equal than BOOTEND.

Table 8-1. Setting Up Flash Sections

BOOTEND	APPEND	BOOT Section	APPCODE Section	APPDATA Section
0	0	0 to FLASHEND	-	-
> 0	0	0 to 256*BOOTEND	256*BOOTEND to FLASHEND	-
> 0	== BOOTEND	0 to 256*BOOTEND	-	256*BOOTEND to FLASHEND
> 0	> BOOTEND	0 to 256*BOOTEND	256*BOOTEND to 256*APPEND	256*APPEND to FLASHEND

Note:

- See also the BOOTEND and APPEND descriptions.
- Interrupt vectors are by default located after the BOOT section. This can be changed in the interrupt controller.

> If FUSE.BOOTEND is written to 0x04 and FUSE.APPEND is written to 0x08, the first 4*256 bytes will be BOOT, the next 4*256 bytes will be APPCODE, and the remaining Flash will be APPDATA.

Inter-Section Write Protection

Between the three Flash sections, a directional write protection is implemented:

- Code in the BOOT section can write to APPCODE and APPDATA
- Code in APPCODE can write to APPDATA
- Code in APPDATA cannot write to Flash or EEPROM

Boot Section Lock and Application Code Section Write Protection

The two lockbits (APCWP and BOOTLOCK in NVMCTRL.CTRLB) can be set to lock further updates of the respective APPCODE or BOOT section until the next Reset.

The CPU can never write to the BOOT section. NVMCTRL_CTRLB.BOOTLOCK prevents reads and execution of code from the BOOT section.

8.3.1.2 EEPROM

The EEPROM is divided into a set of pages where one page consists of multiple bytes. The EEPROM has byte granularity on erase/write. Within one page only the bytes marked to be updated will be erased/written. The byte is marked by writing a new value to the page buffer for that address location.

8.3.1.3 User Row

The User Row is one extra page of EEPROM. This page can be used to store various data, such as calibration/configuration data and serial numbers. This page is not erased by a chip erase. The User Row is written as normal EEPROM, but in addition, it can be written through UPDI on a locked device.

8.3.2 Memory Access

8.3.2.1 Read

Reading of the Flash and EEPROM is done by using load instructions with an address according to the memory map. Reading any of the arrays while a write or erase is in progress will result in a bus wait, and the instruction will be suspended until the ongoing operation is complete.

8.3.2.2 Page Buffer Load

The page buffer is loaded by writing directly to the memories as defined in the memory map. Flash, EEPROM, and User Row share the same page buffer so only one section can be programmed at a time. The Least Significant bits (LSb) of the address are used to select where in the page buffer the data is written. The resulting data will be a binary and operation between the new and the previous content of the page buffer. The page buffer will automatically be erased (all bits set) after:

- A device Reset
- Any page write or erase operation
- A Clear Page Buffer command
- The device wakes up from any sleep mode

8.3.2.3 Programming

For page programming, filling the page buffer and writing the page buffer into Flash, User Row, and EEPROM are two separate operations.

Before programming a Flash page with the data in the page buffer, the Flash page must be erased. The page buffer is also erased when the device enters a sleep mode. Programming an unerased Flash page will corrupt its content.

The Flash can either be written with the erase and write separately, or one command handling both:

Alternative 1:

- Fill the page buffer
- Write the page buffer to Flash with the Erase/Write Page command

Alternative 2:

- Write to a location in the page to set up the address
- Perform an Erase Page command
- Fill the page buffer
- Perform a Write Page command

The NVM command set supports both a single erase and write operation, and split Page Erase and Page Write commands. This split commands enable shorter programming time for each command, and the erase operations can be done during non-time-critical programming execution.

The EEPROM programming is similar, but only the bytes updated in the page buffer will be written or erased in the EEPROM.

8.3.2.4 Commands

Reading of the Flash/EEPROM and writing of the page buffer is handled with normal load/store instructions. Other operations, such as writing and erasing the memory arrays, are handled by commands in the NVM.

To execute a command in the NVM:

1. Confirm that any previous operation is completed by reading the Busy Flags (EEBUSY and FBUSY) in the NVMCTRL.STATUS register.
2. Write the NVM command unlock to the Configuration Change Protection register in the CPU (CPU.CCP).
3. Write the desired command value to the CMD bits in the Control A register (NVMCTRL.CTRLA) within the next four instructions.

8.3.2.4.1 Write Command

The Write command of the Flash controller writes the content of the page buffer to the Flash or EEPROM.

If the write is to the Flash, the CPU will stop executing code as long as the Flash is busy with the write operation. If the write is to the EEPROM, the CPU can continue executing code while the operation is ongoing.

The page buffer will be automatically cleared after the operation is finished.

8.3.2.4.2 Erase Command

The Erase command erases the current page. There must be one byte written in the page buffer for the Erase command to take effect.

For erasing the Flash, first, write to one address in the desired page, then execute the command. The whole page in the Flash will then be erased. The CPU will be halted while the erase is ongoing.

For the EEPROM, only the bytes written in the page buffer will be erased when the command is executed. To erase a specific byte, write to its corresponding address before executing the command. To erase a whole page all the bytes in the page buffer have to be updated before executing the command. The CPU can continue running code while the operation is ongoing.

The page buffer will automatically be cleared after the operation is finished.

8.3.2.4.3 Erase-Write Operation

The Erase/Write command is a combination of the Erase and Write command, but without clearing the page buffer after the Erase command: The erase/write operation first erases the selected page, then it writes the content of the page buffer to the same page.

When executed on the Flash, the CPU will be halted when the operations are ongoing. When executed on EEPROM, the CPU can continue executing code.

The page buffer will automatically be cleared after the operation is finished.

8.3.2.4.4 Page Buffer Clear Command

The Page Buffer Clear command clears the page buffer. The contents of the page buffer will be all 1's after the operation. The CPU will be halted when the operation executes (seven CPU cycles).

8.3.2.4.5 Chip Erase Command

The Chip Erase command erases the Flash and the EEPROM. The EEPROM is unaltered if the EEPROM Save During Chip Erase (EESAVE) fuse in FUSE.SYSCFG0 is set. The Flash will not be protected by Boot Section Lock (BOOTLOCK) or Application Code Section Write Protection (APCWP) in NVMCTRL.CTRLB. The memory will be all 1's after the operation.

8.3.2.4.6 EEPROM Erase Command

The EEPROM Erase command erases the EEPROM. The EEPROM will be all 1's after the operation. The CPU will be halted while the EEPROM is being erased.

8.3.2.4.7 Fuse Write Command

The Fuse Write command writes the fuses. It can only be used by the UPDI, the CPU cannot start this command.

Follow this procedure to use this command:

- Write the address of the fuse to the Address register (NVMCTRL.ADDR)
- Write the data to be written to the fuse to the Data register (NVMCTRL.DATA)
- Execute the Fuse Write command.
- After the fuse is written, a Reset is required for the updated value to take effect.

For reading fuses, use a regular read on the memory location.

8.3.3 Preventing Flash/EEPROM Corruption

During periods of low V_{DD}, the Flash program or EEPROM data can be corrupted if the supply voltage is too low for the CPU and the Flash/EEPROM to operate properly. These issues are the same as for board level systems using Flash/EEPROM, and the same design solutions should be applied.

A Flash/EEPROM corruption can be caused by two situations when the voltage is too low:

1. A regular write sequence to the Flash, which requires a minimum voltage to operate correctly.
2. The CPU itself can execute instructions incorrectly when the supply voltage is too low.

See the Electrical Characteristics chapter for Maximum Frequency vs. V_{DD}.

Flash/EEPROM corruption can be avoided by these measures:

- Keep the device in Reset during periods of insufficient power supply voltage. This can be done by enabling the internal Brown-Out Detector (BOD).
- The voltage level monitor in the BOD can be used to prevent starting a write to the EEPROM close to the BOD level.
- If the detection levels of the internal BOD don't match the required detection level, an external low V_{DD} Reset protection circuit can be used. If a Reset occurs while a write operation is ongoing, the write operation will be aborted.

8.3.4 Interrupts

Table 8-2. Available Interrupt Vectors and Sources

Offset	Name	Vector Description	Conditions
0x00	EEREADY	NVM	The EEPROM is ready for new write/erase operations.

When an interrupt condition occurs, the corresponding interrupt flag is set in the Interrupt Flags register of the peripheral (NVMCTRL.INTFLAGS).

An interrupt source is enabled or disabled by writing to the corresponding bit in the peripheral's Interrupt Enable register (NVMCTRL.INTEN).

An interrupt request is generated when the corresponding interrupt source is enabled and the interrupt flag is set. The interrupt request remains active until the interrupt flag is cleared. See the peripheral's INTFLAGS register for details on how to clear interrupt flags.

8.3.5 Sleep Mode Operation

If there is no ongoing write operation, the NVMCTRL will enter sleep mode when the system enters sleep mode.

If a write operation is ongoing when the system enters a sleep mode, the NVM block, the NVM Controller, and the system clock will remain ON until the write is finished. This is valid for all sleep modes, including Power-Down Sleep mode.

The EEPROM Ready interrupt will wake up the device only from Idle Sleep mode.

The page buffer is cleared when waking up from Sleep.

8.3.6 Configuration Change Protection

This peripheral has registers that are under Configuration Change Protection (CCP). In order to write to these, a certain key must be written to the CPU.CCP register first, followed by a write access to the protected bits within four CPU instructions.

It is possible to try writing to these registers any time, but the values are not altered.

The following registers are under CCP:

Table 8-3. NVMCTRL - Registers under Configuration Change Protection

Register	Key
NVMCTRL.CTRLA	SPM

8.4 Register Summary - NVMCTRL

Offset	Name	Bit Pos.								
0x00	CTRLA	7:0						CMD[2:0]		
0x01	CTRLB	7:0							BOOTLOCK	APCWP
0x02	STATUS	7:0						WRERROR	EEBUSY	FBUSY
0x03	INTCTRL	7:0								EEREADY
0x04	INTFLAGS	7:0								EEREADY
0x05	Reserved									
0x06	DATA	7:0	DATA[7:0]							
		15:8	DATA[15:8]							
0x08	ADDR	7:0	ADDR[7:0]							
		15:8	ADDR[15:8]							

8.5 Register Description

8.5.1 Control A

Name: CTRLA
Offset: 0x00
Reset: 0x00
Property: Configuration Change Protection

Bit	7	6	5	4	3	2	1	0
						CMD[2:0]		
Access						R/W	R/W	R/W
Reset						0	0	0

Bits 2:0 – CMD[2:0] Command
Write this bit field to issue a command. The Configuration Change Protection key for self-programming (SPM) has to be written within four instructions before this write.

Value	Name	Description
0x0	-	No command
0x1	WP	Write page buffer to memory (NVMCTRL.ADDR selects which memory)
0x2	ER	Erase page (NVMCTRL.ADDR selects which memory)
0x3	ERWP	Erase and write page (NVMCTRL.ADDR selects which memory)
0x4	PBC	Page buffer clear
0x5	CHER	Chip erase: erase Flash and EEPROM (unless EESAVE in FUSE.SYSCFG is '1')
0x6	EEER	EEPROM Erase
0x7	WFU	Write fuse (only accessible through UPDI)

8.5.2 Control B

Name: CTRLB
Offset: 0x01
Reset: 0x00
Property: -

Bit	7	6	5	4	3	2	1	0
							BOOTLOCK	APCWP
Access							R/W	R/W
Reset							0	0

Bit 1 – BOOTLOCK Boot Section Lock
Writing a '1' to this bit locks the boot section from read and instruction fetch.
If this bit is '1', a read from the boot section will return '0'. A fetch from the boot section will also return '0' as instruction.
This bit can be written from the boot section only. It can only be cleared to '0' by a Reset.
This bit will take effect only when the boot section is left the first time after the bit is written.

Bit 0 – APCWP Application Code Section Write Protection
Writing a '1' to this bit protects the application code section from further writes.
This bit can only be written to '1'. It is cleared to '0' only by Reset.

8.5.3 Status

Name: STATUS
Offset: 0x02
Reset: 0x00
Property: -

Bit	7	6	5	4	3	2	1	0
						WRERROR	EEBUSY	FBUSY
Access						R	R	R
Reset						0	0	0

Bit 2 – WRERROR Write Error
This bit will read '1' when a write error has happened. A write error could be writing to different sections before doing a page write or writing to a protected area. This bit is valid for the last operation.

Bit 1 – EEBUSY EEPROM Busy
This bit will read '1' when the EEPROM is busy with a command.

Bit 0 – FBUSY Flash Busy
This bit will read '1' when the Flash is busy with a command.

8.5.4 Interrupt Control

Name: INTCTRL
Offset: 0x03
Reset: 0x00
Property: -

Bit	7	6	5	4	3	2	1	0
								EEREADY
Access								R/W
Reset								0

Bit 0 – EEREADY EEPROM Ready Interrupt
Writing a '1' to this bit enables the interrupt, which indicates that the EEPROM is ready for new write/erase operations.
This is a level interrupt that will be triggered only when the EEREADY flag in the INTFLAGS register is set to zero. Thus, the interrupt should not be enabled before triggering an NVM command, as the EEREADY flag will not be set before the NVM command issued. The interrupt should be disabled in the interrupt handler.

8.5.5 Interrupt Flags

Name: INTFLAGS
Offset: 0x04
Reset: 0x00
Property: -

Bit	7	6	5	4	3	2	1	0
								EEREADY
Access								R/W
Reset								0

Bit 0 – EEREADY EEREADY Interrupt Flag
This flag is set continuously as long as the EEPROM is not busy. This flag is cleared by writing a '1' to it.

8.5.6 Data

Name: DATA
Offset: 0x06
Reset: 0x00
Property: -

The NVMCTRL.DATAL and NVMCTRL.DATAH register pair represents the 16-bit value, NVMCTRL.DATA. The low byte [7:0] (suffix L) is accessible at the original offset. The high byte [15:8] (suffix H) can be accessed at offset + 0x01.

Bit	15	14	13	12	11	10	9	8
	DATA[15:8]							
Access	R/W	R/W	R/W	R/W	R/W	R/W	R/W	R/W
Reset	0	0	0	0	0	0	0	0

Bit	7	6	5	4	3	2	1	0
	DATA[7:0]							
Access	R/W	R/W	R/W	R/W	R/W	R/W	R/W	R/W
Reset	0	0	0	0	0	0	0	0

Bits 15:0 – DATA[15:0] Data Register
This register is used by the UPDI for fuse write operations.

8.5.7 Address

Name: ADDR
Offset: 0x08
Reset: 0x00
Property: -

The NVMCTRL.ADDRL and NVMCTRL.ADDRH register pair represents the 16-bit value, NVMCTRL.ADDR. The low byte [7:0] (suffix L) is accessible at the original offset. The high byte [15:8] (suffix H) can be accessed at offset + 0x01.

Bit	15	14	13	12	11	10	9	8
	ADDR[15:8]							
Access	R/W	R/W	R/W	R/W	R/W	R/W	R/W	R/W
Reset	0	0	0	0	0	0	0	0

Bit	7	6	5	4	3	2	1	0
	ADDR[7:0]							
Access	R/W	R/W	R/W	R/W	R/W	R/W	R/W	R/W
Reset	0	0	0	0	0	0	0	0

Bits 15:0 – ADDR[15:0] Address
The Address register contains the address to the last memory location that has been updated.

9. CLKCTRL - Clock Controller

9.1 Features

- All clocks and clock sources are automatically enabled when requested by peripherals
- Internal Oscillators:
  - 16/20 MHz Oscillator (OSC20M)
  - 32 KHz Ultra Low-Power Oscillator (OSCULP32K)
- External Clock Options:
  - 32.768 kHz Crystal Oscillator (XOSC32K)
  - External clock
- Main Clock Features:
  - Safe run-time switching
  - Prescaler with 1x to 64x division in 12 different settings

9.2 Overview

The Clock Controller peripheral (CLKCTRL) controls, distributes, and prescales the clock signals from the available oscillators. The CLKCTRL supports internal and external clock sources.

The CLKCTRL is based on an automatic clock request system, implemented in all peripherals on the device. The peripherals will automatically request the clocks needed. If multiple clock sources are available, the request is routed to the correct clock source.

The Main Clock (CLK_MAIN) is used by the CPU, RAM, and the I/O bus. The main clock source can be selected and prescaled. Some peripherals can share the same clock source as the main clock, or run asynchronously to the main clock domain.

9.2.1 Block Diagram - CLKCTRL

Figure 9-1. CLKCTRL Block Diagram

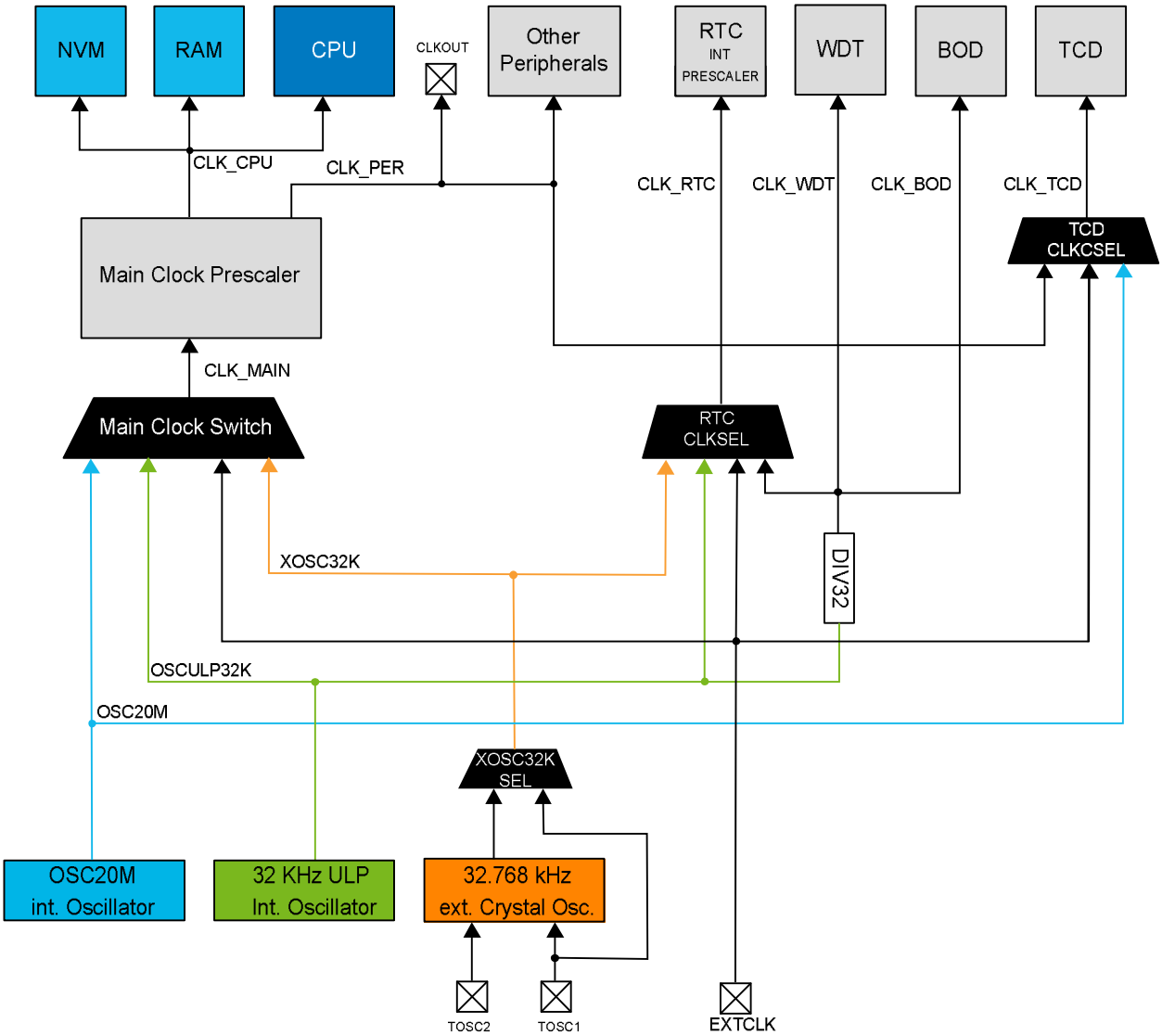

The clock system consists of the main clock and other asynchronous clocks:

- Main Clock
  This clock is used by the CPU, RAM, Flash, the I/O bus, and all peripherals connected to the I/O bus. It is always running in Active and Idle Sleep mode and can be running in Standby Sleep mode if requested.

  The main clock CLK_MAIN is prescaled and distributed by the clock controller:
  - CLK_CPU is used by the CPU, SRAM, and the NVMCTRL peripheral to access the nonvolatile memory
  - CLK_PER is used by all peripherals that are not listed under asynchronous clocks.
- Clocks running asynchronously to the main clock domain:
  – CLK_RTC is used by the RTC/PIT. It will be requested when the RTC/PIT is enabled. The clock source for CLK_RTC should only be changed if the peripheral is disabled.
  – CLK_WDT is used by the WDT. It will be requested when the WDT is enabled.
  – CLK_BOD is used by the BOD. It will be requested when the BOD is enabled in Sampled mode.

The clock source for the for the main clock domain is configured by writing to the Clock Select bits (CLKSEL) in the Main Clock Control A register (CLKCTRL.MCLKCTRLA). The asynchronous clock sources are configured by registers in the respective peripheral.

9.2.2 Signal Description

Signal	Type	Description
CLKOUT	Digital output	CLK_PER output

9.3 Functional Description

9.3.1 Sleep Mode Operation

When a clock source is not used/requested it will turn OFF. It is possible to request a clock source directly by writing a '1' to the Run Standby bit (RUNSTDBY) in the respective oscillator's Control A register (CLKCTRL.[osc]CTRLA). This will cause the oscillator to run constantly, except for Power-Down Sleep mode. Additionally, when this bit is written to '1' the oscillator start-up time is eliminated when the clock source is requested by a peripheral.

The main clock will always run in Active and Idle Sleep mode. In Standby Sleep mode, the main clock will only run if any peripheral is requesting it, or the Run in Standby bit (RUNSTDBY) in the respective oscillator's Control A register (CLKCTRL.[osc]CTRLA) is written to '1'.

In Power-Down Sleep mode, the main clock will stop after all NVM operations are completed.

9.3.2 Main Clock Selection and Prescaler

All internal oscillators can be used as the main clock source for CLK_MAIN. The main clock source is selectable from software and can be safely changed during normal operation.

Built-in hardware protection prevents unsafe clock switching:

Upon selection of an external clock source, a switch to the chosen clock source will only occur if edges are detected, indicating it is stable. Until a sufficient number of clock edges are detected, the switch will not occur and it will not be possible to change to another clock source again without executing a reset.

An ongoing clock source switch is indicated by the System Oscillator Changing flag (SOSC) in the Main Clock Status register (CLKCTRL.MCLKSTATUS). The stability of the external clock sources is indicated by the respective status flags (EXTS and XOSC32KS in CLKCTRL.MCLKSTATUS).

⚠ CAUTION If an external clock source fails while used as CLK_MAIN source, only the WDT can provide a mechanism to switch back via System Reset.

CLK_MAIN is fed into a prescaler before it is used by the peripherals (CLK_PER) in the device. The prescaler divide CLK_MAIN by a factor from 1 to 64.

Figure 9-2. Main Clock and Prescaler

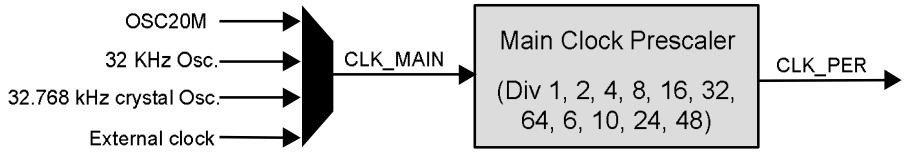

The Main Clock and Prescaler configuration registers (CLKCTRL.MCLKCTRLA, CLKCTRL.MCLKCTRLB) are protected by the Configuration Change Protection Mechanism, employing a timed write procedure for changing these registers.

9.3.3 Main Clock After Reset

After any reset, CLK_MAIN is provided by the 16/20 MHz Oscillator (OSC20M) and with a prescaler division factor of 6. The actual frequency of the OSC20M is determined by the Frequency Select bits (FREQSEL) of the Oscillator Configuration fuse (FUSE.OSCCFG). Refer to the description of FUSE.OSCCFG for details of the possible frequencies after reset.

9.3.4 Clock Sources

All internal clock sources are enabled automatically when they are requested by a peripheral. The crystal oscillator, based on an external crystal, must be enabled by writing a '1' to the ENABLE bit in the 32 KHz Crystal Oscillator Control A register (CLKCTRL.XOSC32KCTRLA) before it can serve as a clock source.

The respective Oscillator Status bits in the Main Clock Status register (CLKCTRL.MCLKSTATUS) indicate whether the clock source is running and stable.

9.3.4.1 Internal Oscillators

The internal oscillators do not require any external components to run. See the related links for accuracy and electrical characteristics.

9.3.4.1.1 16/20 MHz Oscillator (OSC20M)

This oscillator can operate at multiple frequencies, selected by the value of the Frequency Select bits (FREQSEL) in the Oscillator Configuration Fuse (FUSE.OSCCFG).

After a system reset, FUSE.OSCCFG determines the initial frequency of CLK_MAIN.

During reset, the calibration values for the OSC20M are loaded from fuses. There are two different calibration bit fields. The Calibration bit field (CAL20M) in the Calibration A register (CLKCTRL.OSC20MCALIBA) enables calibration around the current center frequency. The Oscillator Temperature Coefficient Calibration bit field (TEMPCAL20M) in the Calibration B register (CLKCTRL.OSC20MCALIBB) enables adjustment of the slope of the temperature drift compensation.

For applications requiring more fine-tuned frequency setting than the oscillator calibration provides, factory stored frequency error after calibrations are available.

The oscillator calibration can be locked by the Oscillator Lock (OSCLOCK) Fuse (FUSE.OSCCFG). When this fuse is ‘1’, it is not possible to change the calibration. The calibration is locked if this oscillator is used as the main clock source and the Lock Enable bit (LOCKEN) in the Control B register (CLKCTRL.OSC20MCALIBB) is ‘1’.

The calibration bits are protected by the Configuration Change Protection Mechanism, requiring a timed write procedure for changing the main clock and prescaler settings.

Refer to the Electrical Characteristics section for the start-up time.

OSC20M Stored Frequency Error Compensation

This oscillator can operate at multiple frequencies, selected by the value of the Frequency Select bits (FREQSEL) in the Oscillator Configuration fuse (FUSE.OSCCFG) at reset. As previously mentioned appropriate calibration values are loaded to adjust to center frequency (OSC20M), and temperature drift compensation (TEMPCAL20M), meeting the specifications defined in the internal oscillator characteristics. For applications requiring a wider operating range, the relative factory stored frequency error after calibrations can be used. The four errors are measured at different settings and are available in the signature row as signed byte values.

- SIGROW.OSC16ERR3V is the frequency error from 16 MHz measured at 3V
- SIGROW.OSC16ERR5V is the frequency error from 16 MHz measured at 5V
- SIGROW.OSC20ERR3V is the frequency error from 20 MHz measured at 3V
- SIGROW.OSC20ERR5V is the frequency error from 20 MHz measured at 5V

The error is stored as a compressed **Q1.10** fixed point 8-bit value, in order not to lose resolution, where the MSb is the sign bit and the seven LSb the lower bits of the **Q1.10**.

$$\mathrm{BAUD}_{actual} = \left(\mathrm{BAUD}_{ideal} + \frac{\mathrm{BAUD}_{ideal} * SigRowError}{1024}\right)$$

The minimum legal BAUD register value is 0x40, the target BAUD register value should therefore not be lower than 0x4A to ensure that the compensated BAUD value stays within the legal range, even for parts with negative compensation values. The example code below demonstrates how to apply this value for more accurate USART baud rate:

```
#include <assert.h>
/* Baud rate compensated with factory stored frequency error */
/* Asynchronous communication without Auto-baud (Sync Field) */
/* 16MHz Clock, 3V and 600 BAUD              */
```

```
  int8_t  sigrow_val    = SIGROW.OSC16ERR3V;   // read signed error
  int32_t baud_reg_val  = 600;                 // ideal BAUD register value

  assert (baud_reg_val >= 0x4A);                       // Verify legal min BAUD register
value with max neg comp
  baud_reg_val *= (1024 + sigrow_val);       // sum resolution + error
  baud_reg_val /=  1024;                       // divide by resolution
  USART0.BAUD = (int16_t) baud_reg_val;        // set adjusted baud rate
```

9.3.4.1.2 32 KHz Oscillator (OSCULP32K)

The 32 KHz oscillator is optimized for Ultra Low-Power (ULP) operation. Power consumption is decreased at the cost of decreased accuracy compared to an external crystal oscillator.

This oscillator provides the 1 KHz signal for the Real-Time Counter (RTC), the Watchdog Timer (WDT), and the Brown-out Detector (BOD).

The start-up time of this oscillator is the oscillator start-up time plus four oscillator cycles. Refer to the Electrical Characteristics chapter for the start-up time.

9.3.4.2 External Clock Sources

These external clock sources are available:

- External Clock from pin. (EXTCLK).
- The TOSC1 and TOSC2 pins are dedicated to driving a 32.768 kHz Crystal Oscillator (XOSC32K).
- Instead of a crystal oscillator, TOSC1 can be configured to accept an external clock source.

9.3.4.2.1 32.768 kHz Crystal Oscillator (XOSC32K)

This oscillator supports two input options: Either a crystal is connected to the pins TOSC1 and TOSC2, or an external clock running at 32 KHz is connected to TOSC1. The input option must be configured by writing the Source Select bit (SEL) in the XOSC32K Control A register (CLKCTRL.XOSC32KCTRLA).

The XOSC32K is enabled by writing a '1' to its ENABLE bit in CLKCTRL.XOSC32KCTRLA. When enabled, the configuration of the GPIO pins used by the XOSC32K is overridden as TOSC1, TOSC2 pins. The Enable bit needs to be set for the oscillator to start running when requested.

The start-up time of a given crystal oscillator can be accommodated by writing to the Crystal Start-up Time bits (CSUT) in CLKCTRL.XOSC32KCTRLA.

When XOSC32K is configured to use an external clock on TOSC1, the start-up time is fixed to two cycles.

9.3.4.2.2 External Clock (EXTCLK)

The EXTCLK is taken directly from the pin. This GPIO pin is automatically configured for EXTCLK if any peripheral is requesting this clock.

This clock source has a start-up time of two cycles when first requested.

9.3.5 Configuration Change Protection

This peripheral has registers that are under Configuration Change Protection (CCP). In order to write to these, a certain key must be written to the CPU.CCP register first, followed by a write access to the protected bits within four CPU instructions.

It is possible to try writing to these registers any time, but the values are not altered.

The following registers are under CCP:

Table 9-1. CLKCTRL - Registers Under Configuration Change Protection

Register	Key
CLKCTRL.MCLKCTRLB	IOREG
CLKCTRL.MCLKLOCK	IOREG
CLKCTRL.XOSC32KCTRLA	IOREG
CLKCTRL.MCLKCTRLA	IOREG

.....continued

Register	Key
CLKCTRL.OSC20MCTRLA	IOREG
CLKCTRL.OSC20MCALIBA	IOREG
CLKCTRL.OSC20MCALIBB	IOREG
CLKCTRL.OSC32KCTRLA	IOREG

9.4 Register Summary - CLKCTRL

Offset	Name	Bit Pos.								
0x00	MCLKCTRLA	7:0	CLKOUT						CLKSEL[1:0]	
0x01	MCLKCTRLB	7:0				PDIV[3:0]				PEN
0x02	MCLKLOCK	7:0								LOCKEN
0x03	MCLKSTATUS	7:0	EXTS	XOSC32KS	OSC32KS	OSC20MS				SOSC
0x04 ... 0x0F	Reserved									
0x10	OSC20MCTRLA	7:0							RUNSTDBY	
0x11	OSC20MCALIBA	7:0		CAL20M[6:0]						
0x12	OSC20MCALIBB	7:0	LOCK				TEMPCAL20M[3:0]			
0x13 ... 0x17	Reserved									
0x18	OSC32KCTRLA	7:0							RUNSTDBY	
0x19 ... 0x1B	Reserved									
0x1C	XOSC32KCTRLA	7:0			CSUT[1:0]			SEL	RUNSTDBY	ENABLE

9.5 Register Description

9.5.1 Main Clock Control A

Name: MCLKCTRLA
Offset: 0x00
Reset: 0x00
Property: Configuration Change Protection

Bit	7	6	5	4	3	2	1	0
	CLKOUT						CLKSEL[1:0]	
Access	R/W						R/W	R/W
Reset	0						0	0

Bit 7 – CLKOUT System Clock Out
When this bit is written to '1', the system clock is output to the CLKOUT pin.
When the device is in a sleep mode, there is no clock output unless a peripheral is using the system clock.

Bits 1:0 – CLKSEL[1:0] Clock Select
This bit field selects the source for the Main Clock (CLK_MAIN).

Value	Name	Description
0x0	OSC20M	16/20 MHz internal oscillator
0x1	OSCULP32K	32 KHz internal ultra low-power oscillator
0x2	XOSC32K	32.768 kHz external crystal oscillator
0x3	EXTCLK	External clock

9.5.2 Main Clock Control B

Name: MCLKCTRLB
Offset: 0x01
Reset: 0x11
Property: Configuration Change Protection

Bit	7	6	5	4	3	2	1	0
				PDIV[3:0]				PEN
Access				R/W	R/W	R/W	R/W	R/W
Reset				1	0	0	0	1

Bits 4:1 – PDIV[3:0] Prescaler Division
If the Prescaler Enable (PEN) bit is written to '1', these bits define the division ratio of the main clock prescaler. These bits can be written during run-time to vary the clock frequency of the system to suit the application requirements.
The user software must ensure a correct configuration of the input frequency (CLK_MAIN) and prescaler settings, such that the resulting frequency of CLK_PER never exceeds the allowed maximum (see Electrical Characteristics).

Value	Description
Value	Division
0x0	2
0x1	4
0x2	8
0x3	16
0x4	32
0x5	64
0x8	6
0x9	10
0xA	12
0xB	24
0xC	48
other	Reserved

Bit 0 – PEN Prescaler Enable
This bit must be written '1' to enable the prescaler. When enabled, the division ratio is selected by the PDIV bit field. When this bit is written to '0', the main clock will pass through undivided (CLK_PER=CLK_MAIN), regardless of the value of PDIV.

9.5.3 Main Clock Lock

Name: MCLKLOCK
Offset: 0x02
Reset: Based on OSCLOCK in FUSE.OSCCFG
Property: Configuration Change Protection

Bit	7	6	5	4	3	2	1	0
								LOCKEN
Access								R/W
Reset								x

Bit 0 – LOCKEN Lock Enable
Writing this bit to '1' will lock the CLKCTRL.MCLKCTRLA and CLKCTRL.MCLKCTRLB registers, and, if applicable, the calibration settings for the current main clock source from further software updates. Once locked, the CLKCTRL.MCLKLOCK registers cannot be accessed until the next hardware reset.
This provides protection for the CLKCTRL.MCLKCTRLA and CLKCTRL.MCLKCTRLB registers and calibration settings for the main clock source from unintentional modification by software.
At reset, the LOCKEN bit is loaded based on the OSCLOCK bit in FUSE.OSCCFG.

9.5.4 Main Clock Status

Name: MCLKSTATUS
Offset: 0x03
Reset: 0x00
Property: -

Bit	7	6	5	4	3	2	1	0
	EXTS	XOSC32KS	OSC32KS	OSC20MS				SOSC
Access	R	R	R	R				R
Reset	0	0	0	0				0

Bit 7 – EXTS External Clock Status

Value	Description
0	EXTCLK has not started
1	EXTCLK has started

Bit 6 – XOSC32KS XOSC32K Status
The Status bit will only be available if the source is requested as the main clock or by another module. If the oscillator RUNSTDBY bit is set but the oscillator is unused/not requested, this bit will be 0.

Value	Description
0	XOSC32K is not stable
1	XOSC32K is stable

Bit 5 – OSC32KS OSCULP32K Status
The Status bit will only be available if the source is requested as the main clock or by another module. If the oscillator RUNSTDBY bit is set but the oscillator is unused/not requested, this bit will be 0.

Value	Description
0	OSCULP32K is not stable
1	OSCULP32K is stable

Bit 4 – OSC20MS OSC20M Status
The Status bit will only be available if the source is requested as the main clock or by another module. If the oscillator RUNSTDBY bit is set but the oscillator is unused/not requested, this bit will be 0.

Value	Description
0	OSC20M is not stable
1	OSC20M is stable

Bit 0 – SOSC Main Clock Oscillator Changing

Value	Description
0	The clock source for CLK_MAIN is not undergoing a switch
1	The clock source for CLK_MAIN is undergoing a switch and will change as soon as the new source is stable

9.5.5 16/20 MHz Oscillator Control A

Name: OSC20MCTRLA
Offset: 0x10
Reset: 0x00
Property: Configuration Change Protection

Bit	7	6	5	4	3	2	1	0
							RUNSTDBY	
Access							R/W	
Reset							0	

Bit 1 – RUNSTDBY Run Standby
This bit forces the oscillator ON in all modes, even when unused by the system. In Standby Sleep mode this can be used to ensure immediate wake-up and not waiting for oscillator start-up time.
When not requested by peripherals, no oscillator output is provided.
It takes four oscillator cycles to open the clock gate after a request but the oscillator analog start-up time will be removed when this bit is set.

9.5.6 16/20 MHz Oscillator Calibration A

Name: OSC20MCALIBA
Offset: 0x11
Reset: Based on FREQSEL in FUSE.OSCCFG
Property: Configuration Change Protection

Bit	7	6	5	4	3	2	1	0
		CAL20M[6:0]						
Access		R/W	R/W	R/W	R/W	R/W	R/W	R/W
Reset		x	x	x	x	x	x	x

Bits 6:0 – CAL20M[6:0] Calibration
These bits change the frequency around the current center frequency of the OSC20M for fine-tuning.
At reset, the factory calibrated values are loaded based on the FREQSEL bit in FUSE.OSCCFG.

9.5.7 16/20 MHz Oscillator Calibration B

Name: OSC20MCALIBB
Offset: 0x12
Reset: Based on FUSE.OSCCFG
Property: Configuration Change Protection

Bit	7	6	5	4	3	2	1	0
	LOCK				TEMPCAL20M[3:0]			
Access	R				R/W	R/W	R/W	R/W
Reset	x				x	x	x	x

Bit 7 – LOCK Oscillator Calibration Locked by Fuse
When this bit is set, the calibration settings in CLKCTRL.OSC20MCALIBA and CLKCTRL.OSC20MCALIBB cannot be changed.
The reset value is loaded from the OSCLOCK bit in the Oscillator Configuration Fuse (FUSE.OSCCFG).

Bits 3:0 – TEMPCAL20M[3:0] Oscillator Temperature Coefficient Calibration
These bits tune the slope of the temperature compensation.
At reset, the factory calibrated values are loaded based on the FREQSEL bits in FUSE.OSCCFG.

9.5.8 32 KHz Oscillator Control A

Name: OSC32KCTRLA
Offset: 0x18
Reset: 0x00
Property: Configuration Change Protection

Bit	7	6	5	4	3	2	1	0
							RUNSTDBY	
Access							R/W	
Reset							0	

Bit 1 – RUNSTDBY Run Standby
This bit forces the oscillator ON in all modes, even when unused by the system. In Standby Sleep mode this can be used to ensure immediate wake-up and not waiting for the oscillator start-up time.
When not requested by peripherals, no oscillator output is provided.
It takes four oscillator cycles to open the clock gate after a request but the oscillator analog start-up time will be removed when this bit is set.

9.5.9 32.768 kHz Crystal Oscillator Control A

Name: XOSC32KCTRLA
Offset: 0x1C
Reset: 0x00
Property: Configuration Change Protection

The SEL and CSUT bits cannot be changed as long as the ENABLE bit is set or the XOSC32K Stable bit (XOSC32KS) in CLKCTRL.MCLKSTATUS is high.
To change settings in a safe way: write a '0' to the ENABLE bit and wait until XOSC32KS is '0' before re-enabling the XOSC32K with new settings.

Bit	7	6	5	4	3	2	1	0
			CSUT[1:0]			SEL	RUNSTDBY	ENABLE
Access			R/W	R/W		R/W	R/W	R/W
Reset			0	0		0	0	0

Bits 5:4 – CSUT[1:0] Crystal Start-Up Time
These bits select the start-up time for the XOSC32K. It is write protected when the oscillator is enabled (ENABLE=1). If SEL=1, the start-up time will not be applied.

Value	Name	Description
0x0	1K	1k cycles
0x1	16K	16k cycles
0x2	32K	32k cycles
0x3	64K	64k cycles

Bit 2 – SEL Source Select
This bit selects the external source type. It is write protected when the oscillator is enabled (ENABLE=1).

Value	Description
0	External crystal
1	External clock on TOSC1 pin

Bit 1 – RUNSTDBY Run Standby
Writing this bit to '1' starts the crystal oscillator and forces the oscillator ON in all modes, even when unused by the system if the ENABLE bit is set. In Standby Sleep mode this can be used to ensure immediate wake-up and not waiting for oscillator start-up time. When this bit is '0', the crystal oscillator is only running when requested and the ENABLE bit is set.
The output of XOSC32K is not sent to other peripherals unless it is requested by one or more peripherals.
When the RUNSTDBY bit is set there will only be a delay of two to three crystal oscillator cycles after a request until the oscillator output is received, if the initial crystal start-up time has already completed.
According to RUNSTBY bit, the oscillator will be turned ON all the time if the device is in Active, Idle, or Standby Sleep mode, or only be enabled when requested.
This bit is I/O protected to prevent unintentional enabling of the oscillator.

Bit 0 – ENABLE Enable
When this bit is written to '1', the configuration of the respective input pins is overridden to TOSC1 and TOSC2. Also, the Source Select bit (SEL) and Crystal Start-Up Time (CSUT) become read-only.
This bit is I/O protected to prevent unintentional enabling of the oscillator.

10. SLPCTRL - Sleep Controller

10.1 Features

- Power management for adjusting power consumption and functions
- Three sleep modes:
  - Idle
  - Standby
  - Power-Down
- Configurable Standby Sleep mode where peripherals can be configured as ON or OFF.

10.2 Overview

Sleep modes are used to shut down peripherals and clock domains in the device in order to save power. The Sleep Controller (SLPCTRL) controls and handles the transitions between active and sleep mode.

There are in total four modes available, one active mode in which software is executed, and three sleep modes. The available sleep modes are; Idle, Standby, and Power-Down.

All sleep modes are available and can be entered from active mode. In active mode, the CPU is executing application code. When the device enters sleep mode, program execution is stopped and interrupts or a reset is used to wake the device again. The application code decides which sleep mode to enter and when.

Interrupts are used to wake the device from sleep. The available interrupt wake-up sources depend on the configured sleep mode. When an interrupt occurs, the device will wake up and execute the interrupt service routine before continuing normal program execution from the first instruction after the `SLEEP` instruction. Any Reset will take the device out of a sleep mode.

The content of the register file, SRAM and registers are kept during sleep. If a Reset occurs during sleep, the device will reset, start, and execute from the Reset vector.

10.2.1 Block Diagram

Figure 10-1. Sleep Controller in System

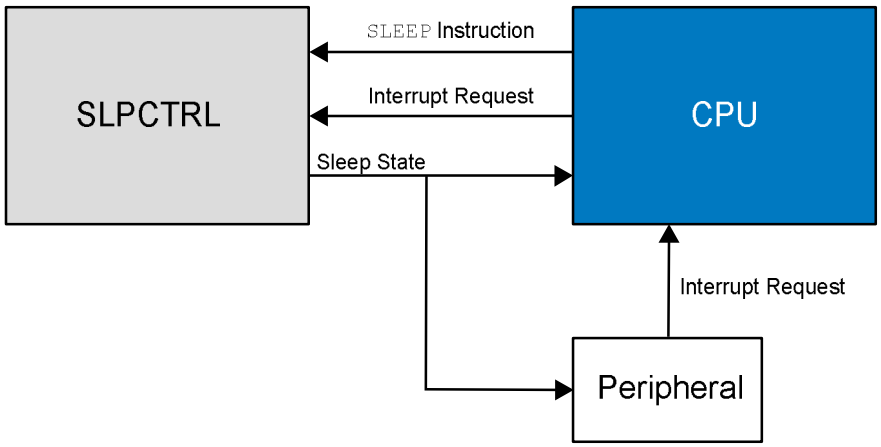

10.3 Functional Description

10.3.1 Initialization

To put the device into a sleep mode, follow these steps:

- Configure and enable the interrupts that shall be able to wake the device from sleep. Also, enable global interrupts.

> **WARNING** If there are no interrupts enabled when going to sleep, the device cannot wake up again. Only a Reset will allow the device to continue operation.

- Select the sleep mode to be entered and enable the Sleep Controller by writing to the Sleep Mode bits (SMODE) and the Enable bit (SEN) in the Control A register (SLPCTRL.CTRLA). A `SLEEP` instruction must be run to make the device actually go to sleep.

10.3.2 Operation

10.3.2.1 Sleep Modes

In addition to Active mode, there are three different sleep modes, with decreasing power consumption and functionality.

Idle The CPU stops executing code, no peripherals are disabled.
All interrupt sources can wake the device.

Standby The user can configure peripherals to be enabled or not, using the respective RUNSTBY bit. This means that the power consumption is highly dependent on what functionality is enabled, and thus may vary between the Idle and Power-Down levels.
SleepWalking is available for the ADC module.

Power-Down BOD, WDT, and PIT (a component of the RTC) are active.
The only wake-up sources are the pin change interrupt, PIT, VLM, TWI address match and CCL.

Table 10-1. Sleep Mode Activity Overview

Group	Peripheral		Active in Sleep Mode		
		Clock	Idle	Standby	Power-Down
Active Clock Domain	CPU	CLK_CPU			
	Peripherals	CLK_PER	X		
	RTC	CLK_RTC	X	X(1)	
	CCL	CLK_PER(2)	X	X(1)	
	ADCn	CLK_PER	X	X(1)	
	TCBn	CLK_PER	X	X(1)	
	PIT (RTC)	CLK_RTC	X	X	X
	BOD (VLM)	CLK_BOD	X	X	X
	WDT	CLK_WDT	X	X	X
Oscillators	Main Clock Source		X	X(1)	
	PIT and RTC Clock Source		X	X(1)	X(3)
	BOD Oscillator		X	X	X
	WDT Oscillator		X	X	X

.....continued

Group	Peripheral		Active in Sleep Mode		
		Clock	Idle	Standby	Power-Down
Wake-Up Sources	INTn and Pin Change		X	X	X
	TWI Address Match		X	X	X
	PIT (RTC)		X	X	X
	CCL		X	X(1)	X(4)
	RTC		X	X(1)	
	UART Start-of-Frame		X	X(1)	
	TCBn		X	X(1)	
	ADCn Window		X	X(1)	
	ACn		X	X(1)	
	All other Interrupts		X		

Note:

1. RUNSTBY bit of the corresponding peripheral must be set to enter the active state.
2. CCL can select between multiple clock sources.
3. PIT only
4. CCL can wake up the device if no internal clock source is required.

10.3.2.2 Wake-Up Time

The normal wake-up time for the device is six main clock cycles (CLK_PER), plus the time it takes to start up the main clock source:

- In Idle Sleep mode, the main clock source is kept running so it will not be any extra wake-up time.
- In Standby Sleep mode, the main clock might be running so it depends on the peripheral configuration.
- In Power-Down Sleep mode, only the ULP 32 KHz oscillator and RTC clock may be running if it is used by the BOD or WDT. All other clock sources will be OFF.

Table 10-2. Sleep Modes and Start-Up Time

Sleep Mode	Start-Up Time
IDLE	6 CLK
Standby	6 CLK + OSC start-up
Power-Down	6 CLK + OSC start-up

The start-up time for the different clock sources is described in the Clock Controller (CLKCTRL) section.

In addition to the normal wake-up time, it is possible to make the device wait until the BOD is ready before executing code. This is done by writing 0x3 to the BOD Operation mode in Active and Idle bits (ACTIVE) in the BOD Configuration fuse (FUSE.BODCFG). If the BOD is ready before the normal wake-up time, the net wake-up time will be the same. If the BOD takes longer than the normal wake-up time, the wake-up time will be extended until the BOD is ready. This ensures correct supply voltage whenever code is executed.

10.3.3 Debug Operation

When run-time debugging, this peripheral will continue normal operation. The SLPCTRL is only affected by a break in debug operation: If the SLPCTRL is in a sleep mode when a break occurs, the device will wake up and the SLPCTRL will go to Active mode, even if there are no pending interrupt requests.

If the peripheral is configured to require periodic service by the CPU through interrupts or similar, improper operation or data loss may result during halted debugging.

10.4 Register Summary - SLPCTRL

Offset	Name	Bit Pos.								
0x00	CTRLA	7:0						SMODE[1:0]		SEN

10.5 Register Description

10.5.1 Control A

Name: CTRLA
Offset: 0x00
Reset: 0x00
Property: -

Bit	7	6	5	4	3	2	1	0
						SMODE[1:0]		SEN
Access	R	R	R	R	R	R/W	R/W	R/W
Reset	0	0	0	0	0	0	0	0

Bits 2:1 – SMODE[1:0] Sleep Mode
Writing these bits selects the sleep mode entered when the Sleep Enable bit (SEN) is written to '1' and the `SLEEP` instruction is executed.

Value	Name	Description
`0x0`	IDLE	Idle Sleep mode enabled
`0x1`	STANDBY	Standby Sleep mode enabled
`0x2`	PDOWN	Power-Down Sleep mode enabled
`other`	-	Reserved

Bit 0 – SEN Sleep Enable
This bit must be written to '1' before the `SLEEP` instruction is executed to make the MCU enter the selected sleep mode.

11. RSTCTRL - Reset Controller

11.1 Features

- Reset the device and set it to an initial state.
- Reset Flag register for identifying the Reset source in software.
- Multiple Reset sources:
  - Power supply Reset sources: Brown-out Detect (BOD), Power-on Reset (POR)
  - User Reset sources: External Reset pin ($\overline{\text{RESET}}$), Watchdog Reset (WDT), Software Reset (SW), and UPDI Reset.

11.2 Overview

The Reset Controller (RSTCTRL) manages the Reset of the device. It issues a device Reset, sets the device to its initial state, and allows the Reset source to be identified by software.

11.2.1 Block Diagram

Figure 11-1. Reset System Overview

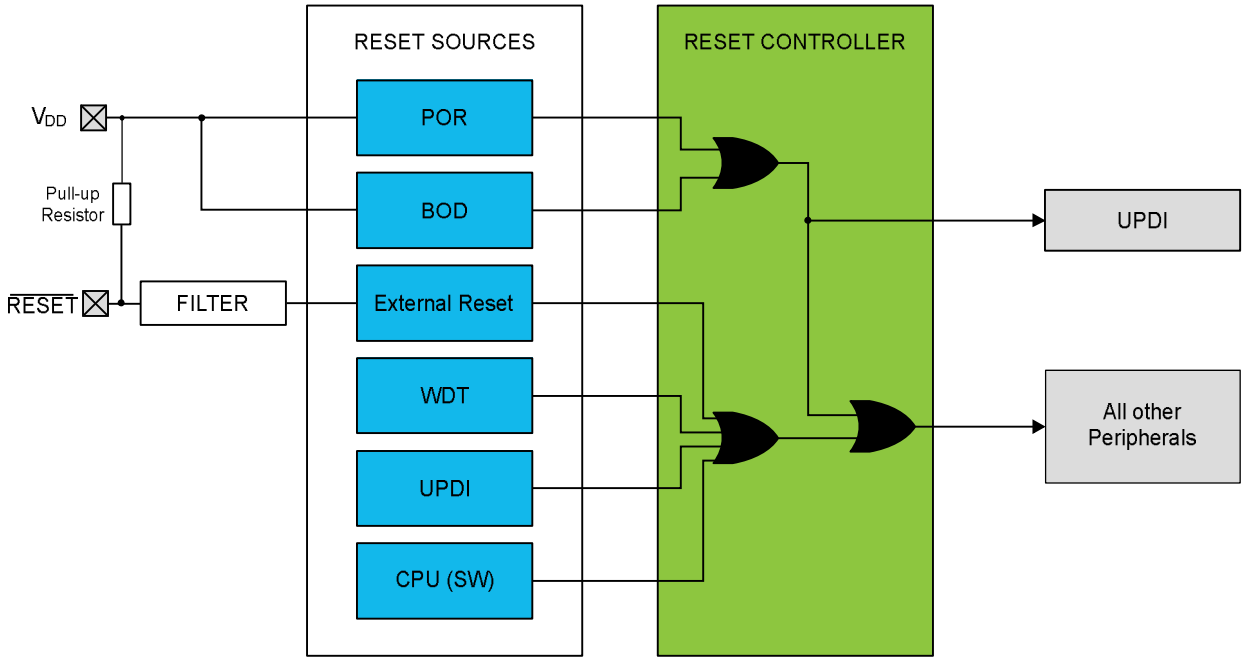

11.2.2 Signal Description

Signal	Description	Type
$\overline{\text{RESET}}$	External Reset (active-low)	Digital input

11.3 Functional Description

11.3.1 Initialization

The Reset Controller (RSTCTRL) is always enabled, but some of the Reset sources must be enabled (either by fuses or by software) before they can request a Reset.

After any Reset, the Reset source that caused the Reset is found in the Reset Flag register (RSTCTRL.RSTFR).

After a Power-on Reset, only the POR flag will be set.

The flags are kept until they are cleared by writing a '1' to them.

After Reset from any source, all registers that are loaded from fuses are reloaded.

11.3.2 Operation

11.3.2.1 Reset Sources

There are two kinds of sources for Resets:

- Power supply Resets, which are caused by changes in the power supply voltage: Power-on Reset (POR) and Brown-out Detector (BOD).
- User Resets, which are issued by the application, by the debug operation, or by pin changes (Software Reset, Watchdog Reset, UPDI Reset, and external Reset pin $\overline{\text{RESET}}$).

11.3.2.1.1 Power-On Reset (POR)

A Power-on-Reset (POR) is generated by an on-chip detection circuit. The POR is activated when the V_{DD} rises until it reaches the POR threshold voltage. The POR is always enabled and will also detect when the V_{DD} falls below the threshold voltage.

11.3.2.1.2 Brown-Out Detector (BOD) Reset

The on-chip Brown-out Detection circuit will monitor the V_{DD} level during operation by comparing it to a fixed trigger level. The trigger level for the BOD can be selected by fuses. If BOD is unused in the application it is forced to a minimum level in order to ensure a safe operation during internal Reset and chip erase.

11.3.2.1.3 Software Reset

The software Reset makes it possible to issue a system Reset from software. The Reset is generated by writing a '1' to the Software Reset Enable bit (SWRE) in the Software Reset register (RSTCTRL.SWRR).

The Reset will take place immediately after the bit is written and the device will be kept in reset until the Reset sequence is completed.

11.3.2.1.4 External Reset

The external Reset is enabled by a fuse, see the RSTPINCFG field in FUSE.SYSCFG0.

When enabled, the external Reset requests a Reset as long as the $\overline{\text{RESET}}$ pin is low. The device will stay in Reset until $\overline{\text{RESET}}$ is high again.

11.3.2.1.5 Watchdog Reset

The Watchdog Timer (WDT) is a system function for monitoring correct program operation. If the WDT is not reset from software according to the programmed time-out period, a Watchdog Reset will be issued. See the WDT documentation for further details.

11.3.2.1.6 Universal Program Debug Interface (UPDI) Reset

The UPDI contains a separate Reset source that is used to reset the device during external programming and debugging. The Reset source is accessible only from external debuggers and programmers. See the UPDI chapter on how to generate a UPDI Reset request.

11.3.2.1.7 Domains Affected By Reset

The following logic domains are affected by the various resets:

Table 11-1. Logic Domains Affected by Various Resets

Reset Type	Fuses are Reloaded	TCD Pin Override Functionality Available	Reset of TCD Pin Override Settings	Reset of BOD Configuration	Reset of UPDI	Reset of Other Volatile Logic
POR	X		X	X	X	X
BOD	X	X			X	X
Software Reset	X	X				X
External Reset	X	X				X

.....continued

Reset Type	Fuses are Reloaded	TCD Pin Override Functionality Available	Reset of TCD Pin Override Settings	Reset of BOD Configuration	Reset of UPDI	Reset of Other Volatile Logic
Watchdog Reset	X	X				X
UPDI Reset	X	X				X

11.3.2.2 Reset Time

The Reset time can be split in two.

The first part is when any of the Reset sources are active. This part depends on the input to the Reset sources. The external Reset is active as long as the $\overline{\text{RESET}}$ pin is low, the Power-on Reset (POR) and Brown-out Detector (BOD) is active as long as the supply voltage is below the Reset source threshold.

When all the Reset sources are released, an internal Reset initialization of the device is done. This time will be increased with the start-up time given by the start-up time fuse setting (SUT in FUSE.SYSCFG1). The internal Reset initialization time will also increase if the CRCSCAN is configured to run at start-up (CRCSRC in FUSE.SYSCFG0).

11.3.3 Sleep Mode Operation

The Reset Controller continues to operate in all active and sleep modes.

11.3.4 Configuration Change Protection

This peripheral has registers that are under Configuration Change Protection (CCP). In order to write to these, a certain key must be written to the CPU.CCP register first, followed by a write access to the protected bits within four CPU instructions.

It is possible to try writing to these registers any time, but the values are not altered.

The following registers are under CCP:

Table 11-2. RSTCTRL - Registers Under Configuration Change Protection

Register	Key
RSTCTRL.SWRR	IOREG

11.4 Register Summary - RSTCTRL

Offset	Name	Bit Pos.								
0x00	RSTFR	7:0			UPDIRF	SWRF	WDRF	EXTRF	BORF	PORF
0x01	SWRR	7:0								SWRE

11.5 Register Description

11.5.1 Reset Flag Register

Name: RSTFR
Offset: 0x00
Reset: 0xXX
Property: -

All flags are cleared by writing a '1' to them. They are also cleared by a Power-On Reset, with the exception of the Power-On Reset Flag (PORF).

Bit	7	6	5	4	3	2	1	0
			UPDIRF	SWRF	WDRF	EXTRF	BORF	PORF
Access			R/W	R/W	R/W	R/W	R/W	R/W
Reset			x	x	x	x	x	x

Bit 5 – UPDIRF UPDI Reset Flag
This bit is set if a UPDI Reset occurs.

Bit 4 – SWRF Software Reset Flag
This bit is set if a Software Reset occurs.

Bit 3 – WDRF Watchdog Reset Flag
This bit is set if a Watchdog Reset occurs.

Bit 2 – EXTRF External Reset Flag
This bit is set if an External reset occurs.

Bit 1 – BORF Brownout Reset Flag
This bit is set if a Brownout Reset occurs.

Bit 0 – PORF Power-On Reset Flag
This bit is set if a Power-On Reset occurs.
This flag is only cleared by writing a '1' to it.
After a POR, only the POR flag is set and all the other flags are cleared. No other flags can be set before a full system boot is run after the POR.

11.5.2 Software Reset Register

Name: SWRR
Offset: 0x01
Reset: 0x00
Property: Configuration Change Protection

Bit	7	6	5	4	3	2	1	0
								SWRE
Access								R/W
Reset								0

Bit 0 – SWRE Software Reset Enable
When this bit is written to '1', a software reset will occur.
This bit will always read as '0'.

12. CPUINT - CPU Interrupt Controller

12.1 Features

- Short and Predictable Interrupt Response Time
- Separate Interrupt Configuration and Vector Address for Each Interrupt
- Interrupt Prioritizing by Level and Vector Address
- Non-Maskable Interrupts (NMI) for Critical Functions
- Two Interrupt Priority Levels: 0 (normal) and 1 (high)
- – One of the Interrupt Requests can optionally be assigned as a Priority Level 1 interrupt
  – Optional Round Robin Priority Scheme for Priority Level 0 Interrupts
- Interrupt Vectors Optionally Placed in the Application Section or the Boot Loader Section
- Selectable Compact Vector Table

12.2 Overview

An interrupt request signals a change of state inside a peripheral and can be used to alter program execution. Peripherals can have one or more interrupts, and all are individually enabled and configured.

When an interrupt is enabled and configured, it will generate an interrupt request when the interrupt condition occurs.

The CPU Interrupt Controller (CPUINT) handles and prioritizes interrupt requests. When an interrupt is enabled and the interrupt condition occurs, the CPUINT will receive the interrupt request. Based on the interrupt's priority level and the priority level of any ongoing interrupts, the interrupt request is either acknowledged or kept pending until it has priority. When an interrupt request is acknowledged by the CPUINT, the Program Counter is set to point to the interrupt vector. The interrupt vector is normally a jump to the interrupt handler (i.e., the software routine that handles the interrupt). After returning from the interrupt handler, program execution continues from where it was before the interrupt occurred. One instruction is always executed before any pending interrupt is served.

The CPUINT Status register (CPUINT.STATUS) contains state information that ensures that the CPUINT returns to the correct interrupt level when the `RETI` (interrupt return) instruction is executed at the end of an interrupt handler. Returning from an interrupt will return the CPUINT to the state it had before entering the interrupt. CPUINT.STATUS is not saved automatically upon an interrupt request.

By default, all peripherals are priority level 0. It is possible to set one single interrupt vector to the higher priority level 1. Interrupts are prioritized according to their priority level and their interrupt vector address. Priority level 1 interrupts will interrupt level 0 interrupt handlers. Among priority level 0 interrupts, the priority is determined from the interrupt vector address, where the lowest interrupt vector address has the highest interrupt priority.

Optionally, a round robin scheduling scheme can be enabled for priority level 0 interrupts. This ensures that all interrupts are serviced within a certain amount of time.

Interrupt generation must be globally enabled by writing a '1' to the Global Interrupt Enable bit (I) in the CPU Status register (CPU.SREG). This bit is not cleared when an interrupt is acknowledged.

12.2.1 Block Diagram

Figure 12-1. CPUINT Block Diagram

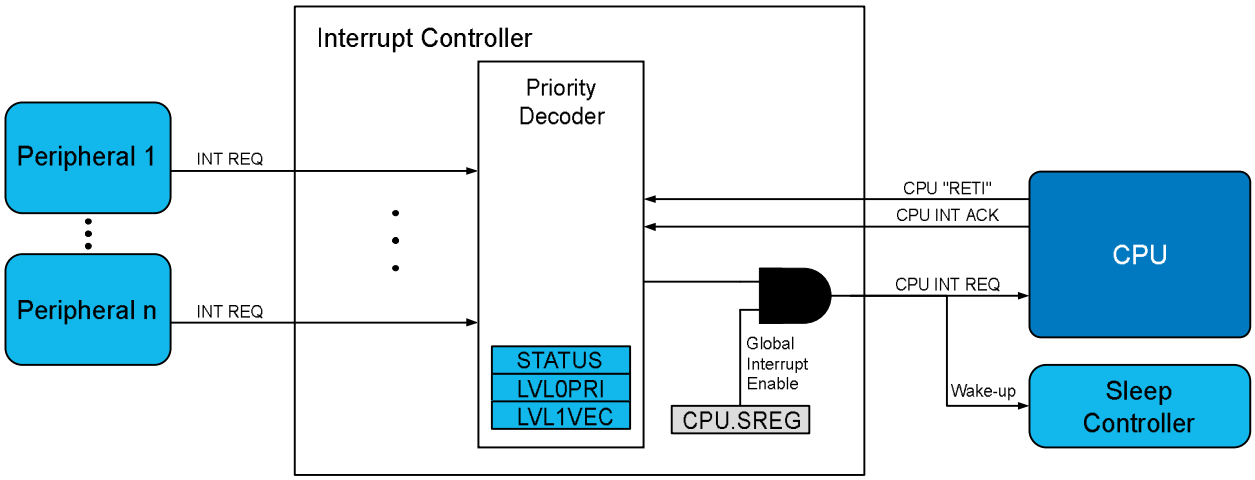

12.3 Functional Description

12.3.1 Initialization

An interrupt must be initialized in the following order:

1. Configure the CPUINT if the default configuration is not adequate (optional):
   - Vector handling is configured by writing to the respective bits (IVSEL and CVT) in the Control A register (CPUINT.CTRLA).
   - Vector prioritizing by round robin is enabled by writing a '1' to the Round Robin Priority Enable bit (LVL0RR) in CPUINT.CTRLA.
   - Select the priority level 1 vector by writing its address to the Interrupt Vector (LVL1VEC) in the Level 1 Priority register (CPUINT.LVL1VEC).
2. Configure the interrupt conditions within the peripheral, and enable the peripheral's interrupt.
3. Enable interrupts globally by writing a '1' to the Global Interrupt Enable bit (I) in the CPU Status register (CPU.SREG).

12.3.2 Operation

12.3.2.1 Enabling, Disabling, and Resetting

Global enabling of interrupts is done by writing a '1' to the Global Interrupt Enable bit (I) in the CPU Status register (CPU.SREG). To disable interrupts globally, write a '0' to the I bit in CPU.SREG.

The desired interrupt lines must also be enabled in the respective peripheral, by writing to the peripheral's Interrupt Control register (*peripheral*.INTCTRL).

Interrupt flags are not automatically cleared after the interrupt is executed. The respective INTFLAGS register descriptions provide information on how to clear specific flags.

12.3.2.2 Interrupt Vector Locations

The Interrupt vector placement is dependent on the value of Interrupt Vector Select bit (IVSEL) in the Control A register (CPUINT.CTRLA). Refer to the IVSEL description in CPUINT.CTRLA for the possible locations.

If the program never enables an interrupt source, the Interrupt Vectors are not used, and regular program code can be placed at these locations.

12.3.2.3 Interrupt Response Time

The minimum interrupt response time for all enabled interrupts is three CPU clock cycles: one cycle to finish the ongoing instruction, two cycles to store the Program Counter to the stack, and three cycles(1) to jump to the interrupt handler (`JMP`).

After the Program Counter is pushed on the stack, the program vector for the interrupt is executed. See Figure 12-2, first diagram.

The jump to the interrupt handler takes three clock cycles(1). If an interrupt occurs during execution of a multicycle instruction, this instruction is completed before the interrupt is served. See Figure 12-2, second diagram.

If an interrupt occurs when the device is in sleep mode, the interrupt execution response time is increased by five clock cycles. In addition, the response time is increased by the start-up time from the selected sleep mode. See Figure 12-2, third diagram.

A return from an interrupt handling routine takes four to five clock cycles, depending on the size of the Program Counter. During these clock cycles, the Program Counter is popped from the stack and the Stack Pointer is incremented.

Figure 12-2. Interrupt Execution of a Single-Cycle Instruction, Multicycle Instruction, and From Sleep[(1)]

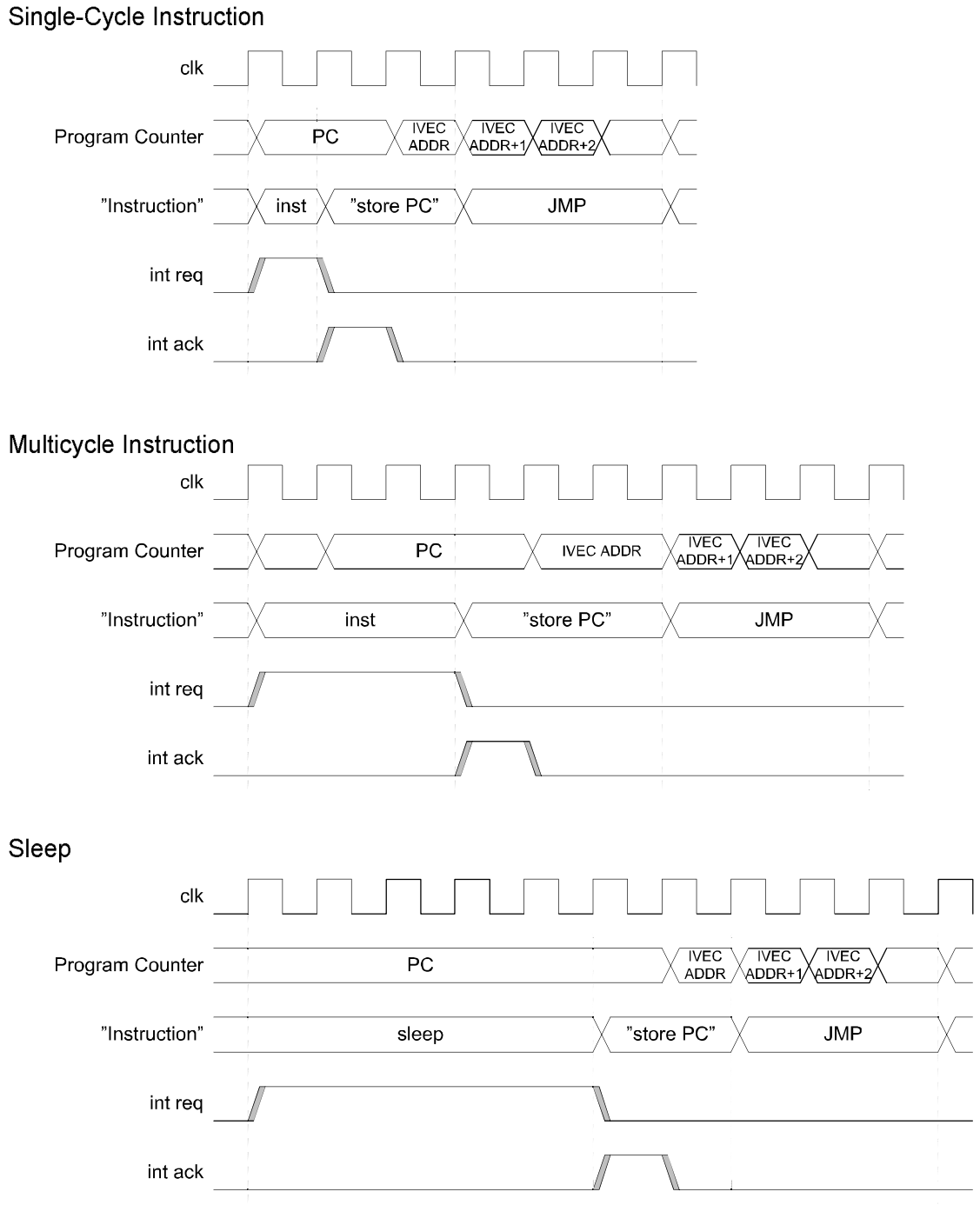

Note:

1. Devices with 8 KB of Flash or less use `RJMP` instead of `JMP`, which takes only two clock cycles.

12.3.2.4 Interrupt Priority

All interrupt vectors are assigned to one of three possible priority levels, as shown in the table. An interrupt request from a high priority source will interrupt any ongoing interrupt handler from a normal priority source. When returning from the high priority interrupt handler, the execution of the normal priority interrupt handler will resume.

Table 12-1. Interrupt Priority Levels

Priority	Level	Source
Highest	Non Maskable Interrupt (NMI)	Device-dependent and statically assigned
...	High Priority (Level 1)	One vector is optionally user selectable as Level 1
Lowest	Normal Priority (Level 0)	The remaining interrupt vectors

12.3.2.4.1 Non-Maskable Interrupts (NMI)

An NMI will be executed regardless of the setting of the I bit in CPU.SREG, and it will never change the I bit. No other interrupt can interrupt an NMI handler. If more than one NMI is requested at the same time, priority is static according to the interrupt vector address, where the lowest address has the highest priority.

Which interrupts are non-maskable is device-dependent and not subject to configuration. Non-maskable interrupts must be enabled before they can be used. Refer to the Interrupt Vector Mapping of the device for available NMI lines.

12.3.2.4.2 High Priority Interrupt

It is possible to assign one interrupt request to level 1 (high priority) by writing its interrupt vector number to the CPUINT.LVL1VEC register. This interrupt request will have higher priority than the other (normal priority) interrupt requests.

12.3.2.4.3 Normal Priority Interrupts

All interrupt vectors other than NMI are assigned to priority level 0 (normal) by default. The user may override this by assigning one of these vectors as a high priority vector. The device will have many normal priority vectors, and some of these may be pending at the same time. Two different scheduling schemes are available to choose which of the pending normal priority interrupts to service first: Static and round robin.

The following sections use the ordered sequence IVEC to explain these scheduling schemes. IVEC is the Interrupt Vector Mapping as listed in the Peripherals and Architecture chapter. IVEC0 is the reset vector, IVEC1 is the NMI vector, and so on. In a vector table with n+1 elements, the vector with the highest vector number is denoted IVECn. Reset, non-maskable interrupts and high-level interrupts are included in the IVEC map, but will be disregarded by the normal priority interrupt scheduler as they are not normal priority interrupts.

Scheduling of Normal Priority Interrupts

Static Scheduling

If several level 0 interrupt requests are pending at the same time, the one with the highest priority is scheduled for execution first. The CPUINT.LVL0PRI register makes it possible to change the default priority. The reset value for CPUINT.LVL0PRI is zero, resulting in a default priority as shown in Figure 12-3. As the figure shows, IVEC0 has the highest priority, and IVECn has the lowest priority.

The default priority can be changed by writing to the CPUINT.LVL0PRI register. The value written to the register will identify the vector number with the lowest priority. The next interrupt vector in IVEC will have the highest priority, see Figure 12-4. In this figure, the value Y has been written to CPUINT.LVL0PRI, so that interrupt vector Y+1 has the highest priority. Note that in this case, the priorities will "wrap" so that IVEC0 has lower priority than IVECn.

Refer to the Interrupt Vector Mapping of the device for available interrupt requests and their interrupt vector number.

Figure 12-3. Static Scheduling when CPUINT.LVL0PRI is zero

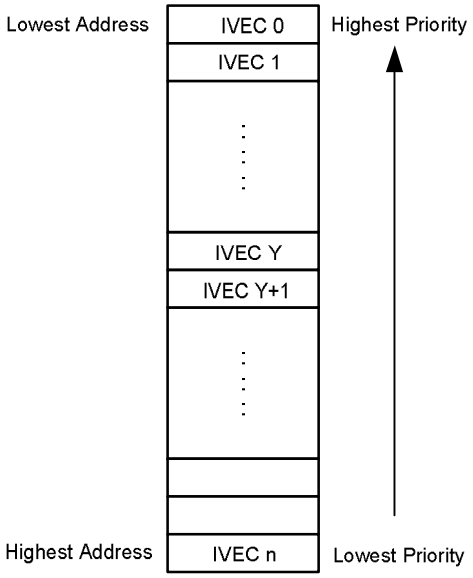

Figure 12-4. Static Scheduling when CPUINT.LVL0PRI is Different From Zero

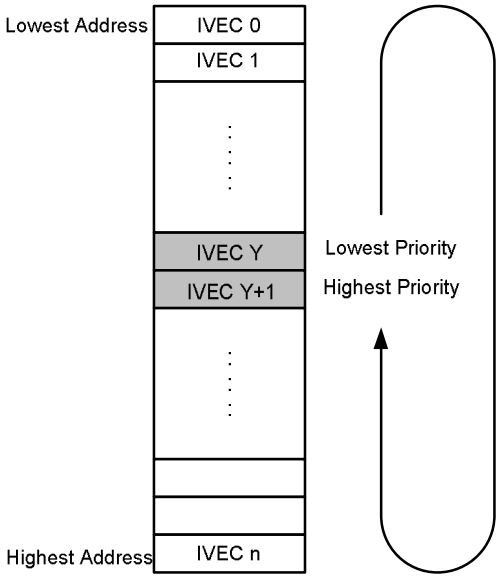

Round Robin Scheduling

Static scheduling may cause starvation, i.e. some interrupts might never be serviced. To avoid this, the CPUINT offers round robin scheduling for normal priority (LVL0) interrupts. In round robin scheduling, CPUINT.LVL0PRI contains the number of the vector number in IVEC with the lowest priority. This register is automatically updated by hardware with the interrupt vector number for the last acknowledged LVL0 interrupt. This interrupt vector will, therefore, have the lowest priority next time one or more LVL0 interrupts are pending. Figure 12-5 explains the new priority ordering after IVEC Y was the last interrupt to be acknowledged, and after IVEC Y+1 was the last interrupt to be acknowledged.

Round robin scheduling for LVL0 interrupt requests is enabled by writing a ‘1’ to the Round Robin Priority Enable bit (LVL0RR) in the Control A register (CPUINT.CTRLA).

Figure 12-5. Round Robin Scheduling

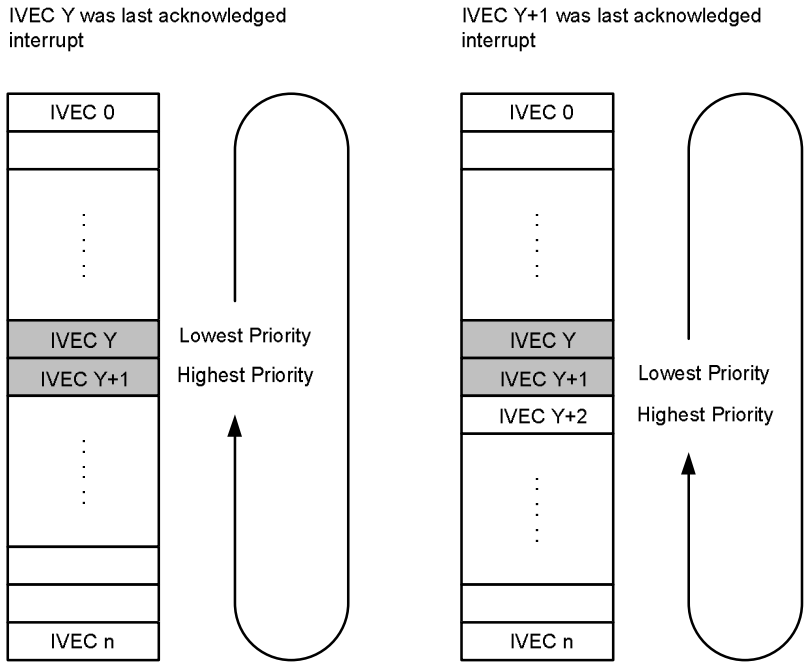

12.3.2.5 Compact Vector Table

The Compact Vector Table (CVT) is a feature to allow writing of compact code.

When CVT is enabled by writing a '1' to the CVT bit in the Control A register (CPUINT.CTRLA), the vector table contains these three interrupt vectors:

1. The non-maskable interrupts (NMI) at vector address 1.
2. The priority level 1 (LVL1) interrupt at vector address 2.
3. All priority level 0 (LVL0) interrupts share vector address 3.

This feature is most suitable for applications using a small number of interrupt generators.

12.3.3 Configuration Change Protection

This peripheral has registers that are under Configuration Change Protection (CCP). In order to write to these, a certain key must be written to the CPU.CCP register first, followed by a write access to the protected bits within four CPU instructions.

It is possible to try writing to these registers any time, but the values are not altered.

The following registers are under CCP:

Table 12-2. INTCTRL - Registers under Configuration Change Protection

Register	Key
IVSEL in CPUINT.CTRLA	IOREG
CVT in CPUINT.CTRLA	IOREG

12.4 Register Summary - CPUINT

Offset	Name	Bit Pos.								
0x00	CTRLA	7:0		IVSEL	CVT					LVL0RR
0x01	STATUS	7:0	NMIEX						LVL1EX	LVL0EX
0x02	LVL0PRI	7:0	LVL0PRI[7:0]							
0x03	LVL1VEC	7:0	LVL1VEC[7:0]							

12.5 Register Description

12.5.1 Control A

Name: CTRLA
Offset: 0x00
Reset: 0x00
Property: Configuration Change Protection

Bit	7	6	5	4	3	2	1	0
		IVSEL	CVT					LVL0RR
Access		R/W	R/W					R/W
Reset		0	0					0

Bit 6 – IVSEL Interrupt Vector Select
If the boot section is defined, it will be placed before the application section. The actual start address of the application section is determined by the BOOTEND Fuse.
This bit is protected by the Configuration Change Protection mechanism.

Value	Description
0	Interrupt vectors are placed at the start of the application section of the Flash.
1	Interrupt vectors are placed at the start of the boot section of the Flash.

Bit 5 – CVT Compact Vector Table
This bit is protected by the Configuration Change Protection mechanism.

Value	Description
0	Compact Vector Table function is disabled
1	Compact Vector Table function is enabled

Bit 0 – LVL0RR Round-Robin Priority Enable
This bit is not protected by the Configuration Change Protection mechanism.

Value	Description
0	Priority is fixed for priority level 0 interrupt requests: The lowest interrupt vector address has the highest priority.
1	Round Robin priority scheme is enabled for priority level 0 interrupt requests.

12.5.2 Status

Name: STATUS
Offset: 0x01
Reset: 0x00
Property: -

Bit	7	6	5	4	3	2	1	0
	NMIEX						LVL1EX	LVL0EX
Access	R						R	R
Reset	0						0	0

Bit 7 – NMIEX Non-Maskable Interrupt Executing
This flag is set if a non-maskable interrupt is executing. The flag is cleared when returning (RETI) from the interrupt handler.

Bit 1 – LVL1EX Level 1 Interrupt Executing
This flag is set when a priority level 1 interrupt is executing, or when the interrupt handler has been interrupted by an NMI. The flag is cleared when returning (RETI) from the interrupt handler.

Bit 0 – LVL0EX Level 0 Interrupt Executing
This flag is set when a priority level 0 interrupt is executing, or when the interrupt handler has been interrupted by a priority level 1 interrupt or an NMI. The flag is cleared when returning (RETI) from the interrupt handler.

12.5.3 Interrupt Priority Level 0

Name: LVL0PRI
Offset: 0x02
Reset: 0x00
Property: -

Bit	7	6	5	4	3	2	1	0
	LVL0PRI[7:0]							
Access	R/W	R/W	R/W	R/W	R/W	R/W	R/W	R/W
Reset	0	0	0	0	0	0	0	0

Bits 7:0 – LVL0PRI[7:0] Interrupt Priority Level 0
This register is used to modify the priority of the LVL0 interrupts. See Scheduling of Normal Priority Interrupts for more information.

12.5.4 Interrupt Vector with Priority Level 1

Name: LVL1VEC
Offset: 0x03
Reset: 0x00
Property: -

Bit	7	6	5	4	3	2	1	0
	LVL1VEC[7:0]							
Access	R/W	R/W	R/W	R/W	R/W	R/W	R/W	R/W
Reset	0	0	0	0	0	0	0	0

Bits 7:0 – LVL1VEC[7:0] Interrupt Vector with Priority Level 1
This bit field contains the address of the single vector with increased priority level 1 (LVL1).
If this bit field has the value 0x00, no vector has LVL1. Consequently, the LVL1 interrupt is disabled.

13. EVSYS - Event System

13.1 Features

- System for direct peripheral-to-peripheral signaling
- Peripherals can directly produce, use, and react to peripheral events
- Short and ensured response time
- Up to 8 parallel Event channels available
- Each channel is driven by one event generator and can have multiple event users
- Events can be sent and/or received by most peripherals, and by software
- The event system works in Active, Idle, and Standby Sleep modes

13.2 Overview

The Event System (EVSYS) enables direct peripheral-to-peripheral signaling. It allows a change in one peripheral (the event generator) to trigger actions in other peripherals (the event users) through event channels, without using the CPU. It is designed to provide short and predictable response times between peripherals, allowing for autonomous peripheral control and interaction, and also for synchronized timing of actions in several peripheral modules. It is thus a powerful tool for reducing the complexity, size, and execution time of the software.

A change of the event generator's state is referred to as an event and usually corresponds to one of the peripheral's interrupt conditions. Events can be directly forwarded to other peripherals using the dedicated event routing network. The routing of each channel is configured in software, including event generation and use.

Only one event signal can be routed on each channel. Multiple peripherals can use events from the same channel.

The EVSYS can directly connect peripherals such as ADCs, analog comparators, I/O port pins, the real-time counter, timer/counters, and the configurable custom logic peripheral. Events can also be generated from software.

13.2.1 Block Diagram

Figure 13-1. Block Diagram

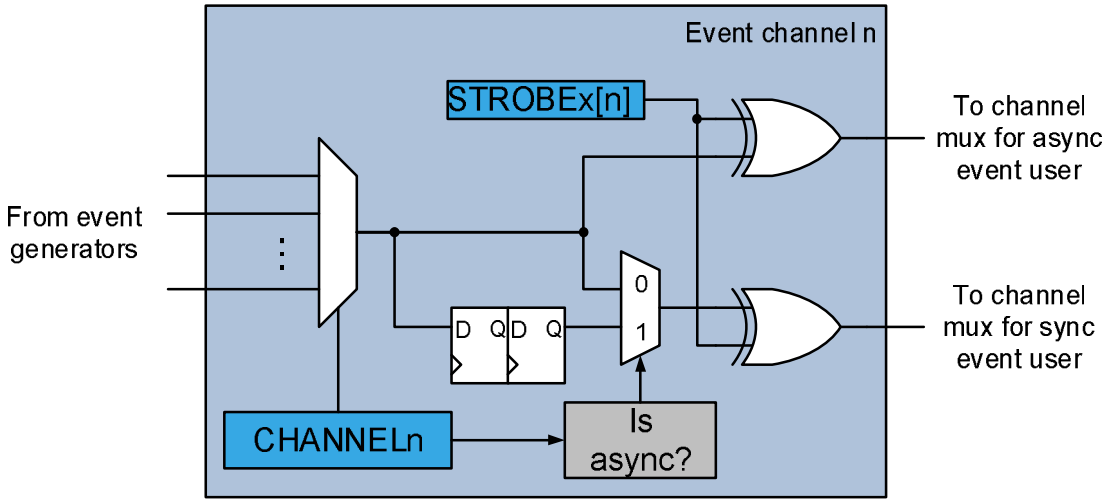

The block diagram shows the operation of an event channel. A multiplexer controlled by EVSYS.CHANNELn at the input selects which of the event sources to route onto the event channel. Each event channel has two subchannels; One asynchronous subchannel and one synchronous subchannel. A synchronous user will listen to the synchronous subchannel, an asynchronous user will listen to the asynchronous subchannel.

An event signal from an asynchronous source will be synchronized by the event system before being routed to the synchronous subchannel. An asynchronous event signal to be used by a synchronous consumer must last for at least

one peripheral clock cycle to ensure that it will propagate through the synchronizer. The synchronizer will delay such an event by 2-3 clock cycles depending on when the event occurs.

Figure 13-2. Example of Event Source, Generator, User, and Action

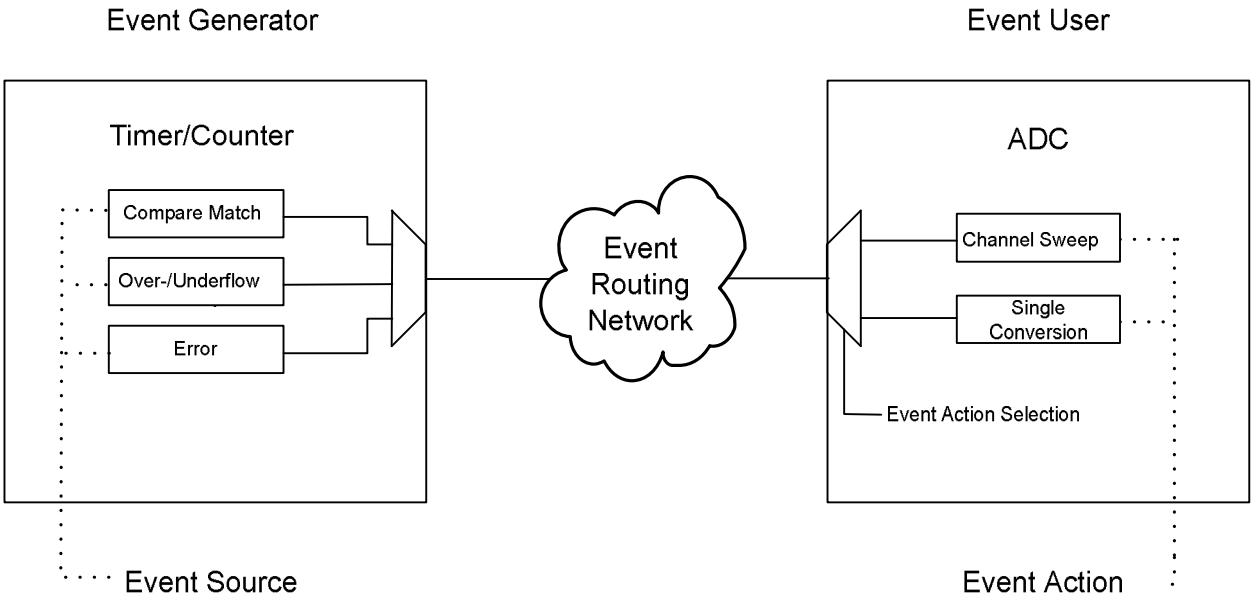

13.2.2 Signal Description

Signal	Type	Description
EVOUTn	Digital output	Event output, one output per I/O Port

13.3 Functional Description

13.3.1 Initialization

To use events, both the event system, the generating peripheral and peripheral(s) using the event must be set up appropriately.

1. Configure the generating peripheral appropriately. As an example, if the generating peripheral is a timer, set the prescaling, compare register, etc. so that the desired event is generated.
2. Configure the event user peripheral(s) appropriately. As an example, if the ADC is the event user, set the ADC prescaler, resolution, conversion time, etc. as desired, and configure ADC conversion to start on the reception of an event.
3. Configure the event system to route the desired source. In this case, the Timer/Compare match to the desired event channel. This may, for example, be channel 0, which is accomplished by writing to EVSYS.CHANNEL0. Configure the ADC to listen to this channel, by writing to EVSYS.USERn, where n is the index allocated to the ADC.

13.3.2 Operation

13.3.2.1 Event User Multiplexer Setup

Each event user has one dedicated event user multiplexer selecting which event channel to listen to. The application configures these multiplexers by writing to the corresponding User Channel Input Selection n (EVSYS.USERn) register.

13.3.2.2 Event System Channel

An event channel can be connected to one of the event generators. Event channels can be connected to either asynchronous generators or synchronous generators.

The source for each event channel is configured by writing to the respective Channel n Input Selection register (EVSYS.CHANNELn).

13.3.2.3 Event Generators

Each event channel has several possible event generators, only one of which can be selected at a time. The event generator trigger for a channel is selected by writing to the respective channel register (EVSYS.CHANNELn). By default, the channels are not connected to any event generator. For details on event generation, refer to the documentation of the corresponding peripheral.

A generated event is either synchronous or asynchronous to clocks in the device, depending on the generator. An asynchronous event can be generated in sleep modes when clocks are not running. Such events can also be generated outside the normal edges of the (prescaled) clocks in the system, making the system respond faster than the selected clock frequency would suggest.

Generator	Event	Generating Clock Domain	Length of event	Constraints for synchronous user
UPDI	SYNC character	CLK_PDI	Waveform: SYNC char on PDI RX input synchronized to CLK_PDI	Synchronizing clock in user must be fast enough to ensure that the event is seen by the user
RTC	Overflow	CLK_RTC	Pulse: 1 * CLK_RTC	None
	Compare Match	CLK_RTC	Pulse: 1 * CLK_RTC	
PIT	RTC Prescaled clock	CLK_RTC	Level	
CCL-LUT	LUT output	Asynchronous	Depends on CCL configuration	Clock source used for CCL must be slower or equal to CLK_PER or input signals to CCL are stable for at least Tclk_per
AC	Comparator result	Asynchronous	Level: Typically ≥1 us	Frequency of input signals to AC must be ≤fclk_per to ensure that the event is seen by the synchronous user
ADC	Result ready	CLK_ADC	Pulse: 1 * CLK_PER	None
PORT	Pin input	Asynchronous	Level: Externally controlled	Input signal must be stable for longer than fclk_per
USART	USART Baud clock	TXCLK	Level	None
SPI	SPI Master clock	SCK	Level	None
TCA	Overflow	CLK_PER	Pulse: 1 * CLK_PER	None
	Underflow in split mode	CLK_PER	Pulse: 1 * CLK_PER	
	Compare match ch 0	CLK_PER	Pulse: 1 * CLK_PER	
	Compare match ch 1	CLK_PER	Pulse: 1 * CLK_PER	
	Compare match ch 2	CLK_PER	Pulse: 1 * CLK_PER	
TCB	CAPT interrupt flag set	CLK_PER	Pulse: 1 * CLK_PER	None

13.3.2.4 Event Users

Each event user must be configured to select the event channel to listen to. An event user may require the event signal to be either synchronous or asynchronous to the system clock. An asynchronous event user can respond to events in sleep modes when clocks are not running. Such events can also be responded to outside the normal edges

of the (prescaled) clocks in the system, making the event user respond faster than the clock frequency would suggest. For details on the requirements of each peripheral, refer to the documentation of the corresponding peripheral.

User	Module/Event Mode	Input Format	Asynchronous
TCAn	CNT_POSEDGE	Edge	No
	CNT_ANYEDGE	Edge	No
	CNT_HIGHLVL	Level	No
	UPDOWN	Level	No
TCBn	Timeout check	Edge	No
	Input Capture on Event	Edge	No
	Input Capture Frequency Measurement	Edge	No
	Input Capture Pulse-Width Measurement	Edge	No
	Input Capture Frequency and Pulse Width Measurement	Edge	No
	Single-Shot	Edge	Yes
USARTn	IrDA Mode	Level	No
CCLLUTnx	LUTn input x or clock signal	Level	Yes
ADCn	ADC start on event	Edge	Yes
EVOUTx	Forward event signal to pin	Level	Yes

13.3.2.5 Synchronization

Events can be either synchronous or asynchronous to the system clock. Each event system channel has two subchannels; one asynchronous and one synchronous. Both subchannels are available to all event users, each user is hardwired to listen to one or the other.

The asynchronous subchannel is identical to the event output from the generator. If the event generator generates a signal that is asynchronous to the system clock, the signal on the asynchronous subchannel will be asynchronous. If the event generator generates a signal that is synchronous to the system clock, the signal on the asynchronous subchannel will also be synchronous.

The synchronous subchannel is identical to the event output from the generator if the event generator generates a signal that is synchronous to the system clock. If the event generator generates a signal that is asynchronous to the system clock, this signal is first synchronized before being routed onto the synchronous subchannel. Synchronization will delay the event by two system cycles. The event system automatically performs this synchronization if an asynchronous generator is selected for an event channel, no explicit configuration is needed.

13.3.2.6 Software Event

The application can generate a software event. Software events on channel n are issued by writing a ‘1’ to the STROBE[n] bit in the EVSYS.STROBEx register. A software event appears as a pulse on the event system channel, inverting the current event system value for one clock cycle.

Event users see software events as no different from those produced by event generating peripherals. When the STROBE[n] bit in the EVSYS.STROBEx register is written to ‘1’, an event will be generated on the respective channel, and received and processed by the event user.

13.3.3 Sleep Mode Operation

When configured, the event system will work in all sleep modes. One exception is software events which require a system clock.

Asynchronous event users are able to respond to an event without their clock running, i.e. in Standby Sleep mode. Synchronous event users require their clock to be running to be able to respond to events. Such users will only work

in Idle Sleep mode or in Standby Sleep mode if configured to run in Standby mode by setting the RUNSTBY bit in the appropriate register.

Asynchronous event generators are able to generate an event without their clock running, i.e. in Standby Sleep mode. Synchronous event generators require their clock to be running to be able to generate events. Such generators will only work in Idle Sleep mode or in Standby Sleep mode if configured to run in Standby mode by setting the RUNSTBY bit in the appropriate register.

13.3.4 Debug Operation

This peripheral is unaffected by entering Debug mode.

13.4 Register Summary - EVSYS

Offset	Name	Bit Pos.								
0x00	STROBEx	7:0	STROBE[7:0]							
0x01 ... 0x0F	Reserved									
0x10	CHANNEL0	7:0	GENERATOR[7:0]							
0x11	CHANNEL1	7:0	GENERATOR[7:0]							
0x12	CHANNEL2	7:0	GENERATOR[7:0]							
0x13	CHANNEL3	7:0	GENERATOR[7:0]							
0x14	CHANNEL4	7:0	GENERATOR[7:0]							
0x15	CHANNEL5	7:0	GENERATOR[7:0]							
0x16	CHANNEL6	7:0	GENERATOR[7:0]							
0x17	CHANNEL7	7:0	GENERATOR[7:0]							
0x18 ... 0x1F	Reserved									
0x20	USER0	7:0	CHANNEL[7:0]							
...										
0x37	USER23	7:0	CHANNEL[7:0]							

13.5 Register Description

13.5.1 Channel Strobe

Name: STROBEx
Offset: 0x00
Reset: 0x00
Property: -

Software Events

Write bits in this register in order to create software events.
Refer to the Peripheral Overview for the available number of event system channels.

Bit	7	6	5	4	3	2	1	0
	STROBE[7:0]							
Access	W	W	W	W	W	W	W	W
Reset	0	0	0	0	0	0	0	0

Bits 7:0 – STROBE[7:0] Channel Strobe
If the strobe register location is written, each event channel will be inverted for one system clock cycle (i.e., a single event is generated).

13.5.2 Channel n Generator Selection

Name: CHANNEL
Offset: 0x10 + n*0x01 [n=0..7]
Reset: 0x00
Property: -

Each channel can be connected to one event generator. Not all generators can be connected to all channels. Refer to the table below to see which generator sources that can be routed onto each channel, and the generator value that must be written to EVSYS.CHANNELn to achieve this routing. The value 0x00 in EVSYS.CHANNELn turns the channel OFF.

Bit	7	6	5	4	3	2	1	0
	GENERATOR[7:0]							
Access	R/W	R/W	R/W	R/W	R/W	R/W	R/W	R/W
Reset	0	0	0	0	0	0	0	0

Bits 7:0 – GENERATOR[7:0] Channel Generator Selection

GENERATOR		INPUT	Async/Sync	CH0	CH1	CH2	CH3	CH4	CH5	CH6	CH7
binary	hex										
0000_0001	0x01	UPDI	Sync	UPDI							
0000_0110	0x06	RTC_OVF	Async	OVF							
0000_0111	0x07	RTC_CMP	Async	CMP							
0000_1000	0x08	RTC_PIT0	Async	DIV8192	DIV512	DIV8192	DIV512	DIV8192	DIV512	DIV8192	DIV512
0000_1001	0x09	RTC_PIT1	Async	DIV4096	DIV256	DIV4096	DIV256	DIV4096	DIV256	DIV4096	DIV256
0000_1010	0x0A	RTC_PIT2	Async	DIV2048	DIV128	DIV2048	DIV128	DIV2048	DIV128	DIV2048	DIV128
0000_1011	0x0B	RTC_PIT3	Async	DIV1024	DIV64	DIV1024	DIV64	DIV1024	DIV64	DIV1024	DIV64
0001_00nn	0x10-0x13	CCL_LUTn	Async	LUTn							
0010_0000	0x20	AC0	Async	OUT							
0010_0100	0x24	ADC0	Sync	RESRDY							
0100_0nnn	0x40-0x47	PORT0_PINn	Async	PORTA_PINn		PORTC_PINn		PORTE_PINn			
0100_1nnn	0x48-0x4F	PORT1_PINn	Async	PORTB_PINn		PORTD_PINn		PORTF_PINn			
0110_0nnn	0x60-0x67	USARTn	Sync	XCK							
0110_1000	0x68	SPI0	Sync	SCK							
1000_0000	0x80	TCA0_OVF_LUNF	Sync	OVF/LUNF							
1000_0001	0x81	TCA0_HUNF	Sync	HUNF							
1000_0100	0x84	TCA0_CMP0	Sync	CMP0							
1000_0101	0x85	TCA0_CMP1	Sync	CMP1							
1000_0110	0x86	TCA0_CMP2	Sync	CMP2							
1010_nnn0	0xA0-0xAE	TCBn	Sync	CAPT							

13.5.3 User Channel Mux

Name: USER
Offset: 0x20 + n*0x01 [n=0..23]
Reset: 0x00
Property: -

Each event user can be connected to one channel. Several users can be connected to the same channel. The following table lists all event system users, with their corresponding user ID number. This ID number corresponds to the USER register index, e.g., the EVSYS.USER2 register controls the user with ID 2.

USER #	User Name	Async/Sync	Description
0	CCLLUT0A	Async	CCL LUT0 event input A
1	CCLLUT0B	Async	CCL LUT0 event input B
2	CCLLUT1A	Async	CCL LUT1 event input A
3	CCLLUT1B	Async	CCL LUT1 event input B
4	CCLLUT2A	Async	CCL LUT2 event input A
5	CCLLUT2B	Async	CCL LUT2 event input B
6	CCLLUT3A	Async	CCL LUT3 event input A
7	CCLLUT3B	Async	CCL LUT3 event input B
8	ADC0	Async	ADC0 Trigger
9	EVOUTA	Async	EVSYS pin output A
10	EVOUTB	Async	EVSYS pin output B
11	EVOUTC	Async	EVSYS pin output C
12	EVOUTD	Async	EVSYS pin output D
13	EVOUTE	Async	EVSYS pin output E
14	EVOUTF	Async	EVSYS pin output F
15	USART0	Sync	USART0 event input
16	USART1	Sync	USART1 event input
17	USART2	Sync	USART2 event input
18	USART3	Sync	USART3 event input
19	TCA0	Sync	TCA0 event input
20	TCB0	Both	TCB0 event input
21	TCB1	Both	TCB1 event input
22	TCB2	Both	TCB2 event input
23	TCB3	Both	TCB3 event input

Bit	7	6	5	4	3	2	1	0
	CHANNEL[7:0]							
Access	R/W	R/W	R/W	R/W	R/W	R/W	R/W	R/W
Reset	0	0	0	0	0	0	0	0

Bits 7:0 – CHANNEL[7:0] User Channel Selection
Describes which event system channel the user is connected to.

Value	Description
0	OFF, no channel is connected to this event system user
n	Event user is connected to CHANNEL(n-1)

14. PORTMUX - Port Multiplexer

14.1 Overview

The Port Multiplexer (PORTMUX) can either enable or disable functionality of pins, or change between default and alternative pin positions. Available options are described in detail in the PORTMUX register map and depend on the actual pin and its properties.

For available pins and functionalities, refer to the “I/O Multiplexing and Considerations” chapter in the Device Data Sheet.

14.2 Register Summary - PORTMUX

Offset	Name	Bit Pos.								
0x00	EVSYSROUTEA	7:0			EVOUTF	EVOUTE	EVOUTD	EVOUTC	EVOUTB	EVOUTA
0x01	CCLROUTEA	7:0					LUT3	LUT2	LUT1	LUT0
0x02	USARTROUTEA	7:0	USART3[1:0]		USART2[1:0]		USART1[1:0]		USART0[1:0]	
0x03	TWISPIROUTEA	7:0			TWI0[1:0]				SPI0[1:0]	
0x04	TCAROUTEA	7:0						TCA0[2:0]		
0x05	TCBROUTEA	7:0					TCB3	TCB2	TCB1	TCB0

14.3 Register Description

14.3.1 PORTMUX Control for Event System

Name: EVSYSROUTEA
Offset: 0x00
Reset: 0x00
Property: -

Bit	7	6	5	4	3	2	1	0
			EVOUTF	EVOUTE	EVOUTD	EVOUTC	EVOUTB	EVOUTA
Access			R/W	R/W	R/W	R/W	R/W	R/W
Reset			0	0	0	0	0	0

Bit 5 – EVOUTF Event Output F
Write this bit to `'1'` to select alternative pin location for Event Output F.

Value	Name	Description
0x0	DEFAULT	EVOUTF on PF2
0x1	-	Reserved

Bit 4 – EVOUTE Event Output E
Write this bit to `'1'` to select alternative pin location for Event Output E.

Value	Name	Description
0x0	DEFAULT	EVOUTE on PE2
0x1	-	Reserved

Bit 3 – EVOUTD Event Output D
Write this bit to `'1'` to select alternative pin location for Event Output D.

Value	Name	Description
0x0	DEFAULT	EVOUTD on PD2
0x1	ALT1	EVOUTD on PD7

Bit 2 – EVOUTC Event Output C
Write this bit to `'1'` to select alternative pin location for Event Output C.

Value	Name	Description
0x0	DEFAULT	EVOUTC on PC2
0x1	ALT1	EVOUTC on PC7

Bit 1 – EVOUTB Event Output A
Write this bit to `'1'` to select alternative pin location for Event Output B.

Value	Name	Description
0x0	DEFAULT	EVOUTB on PB2
0x1	-	Reserved

Bit 0 – EVOUTA Event Output A
Write this bit to `'1'` to select alternative pin location for Event Output A.

Value	Name	Description
0x0	DEFAULT	EVOUTA on PA2
0x1	ALT1	EVOUTA on PA7

14.3.2 PORTMUX Control for CCL

Name: CCLROUTEA
Offset: 0x01
Reset: 0x00
Property: -

Bit	7	6	5	4	3	2	1	0
					LUT3	LUT2	LUT1	LUT0
Access					R/W	R/W	R/W	R/W
Reset					0	0	0	0

Bit 3 – LUT3 CCL LUT 3 Output
Write this bit to `'1'` to select alternative pin location for CCL LUT 3.

Value	Name	Description
`0x0`	DEFAULT	CCL LUT3 on PF[3]
`0x1`	ALT1	CCL LUT3 on PF[6]

Bit 2 – LUT2 CCL LUT 2 Output
Write this bit to `'1'` to select alternative pin location for CCL LUT 2.

Value	Name	Description
`0x0`	DEFAULT	CCL LUT2 on PD[3]
`0x1`	ALT1	CCL LUT2 on PD[6]

Bit 1 – LUT1 CCL LUT 1 Output
Write this bit to `'1'` to select alternative pin location for CCL LUT 1.

Value	Name	Description
`0x0`	DEFAULT	CCL LUT1 on PC[3]
`0x1`	ALT1	CCL LUT1 on PC[6]

Bit 0 – LUT0 CCL LUT 0 Output
Write this bit to `'1'` to select alternative pin location for CCL LUT 0.

Value	Name	Description
`0x0`	DEFAULT	CCL LUT0 on PA[3]
`0x1`	ALT1	CCL LUT0 on PA[6]

14.3.3 PORTMUX Control for USART

Name: USARTROUTEA
Offset: 0x02
Reset: 0x00
Property: -

Bit	7	6	5	4	3	2	1	0
	USART3[1:0]		USART2[1:0]		USART1[1:0]		USART0[1:0]	
Access	R/W	R/W	R/W	R/W	R/W	R/W	R/W	R/W
Reset	0	0	0	0	0	0	0	0

Bits 7:6 – USART3[1:0] USART 3 Communication
Write these bits to select alternative communication pins for USART 3.

Value	Name	Description
0x0	DEFAULT	USART3 on PB[3:0]
0x1	ALT1	USART3 on PB[5:4]
0x2	-	Reserved
0x3	NONE	Not connected to any pins

Bits 5:4 – USART2[1:0] USART 2 Communication
Write these bits to select alternative communication pins for USART 2.

Value	Name	Description
0x0	DEFAULT	USART2 on PF[3:0]
0x1	ALT1	USART2 on PF[6:4]
0x2	-	Reserved
0x3	NONE	Not connected to any pins

Bits 3:2 – USART1[1:0] USART 1 Communication
Write these bits to select alternative communication pins for USART 1.

Value	Name	Description
0x0	DEFAULT	USART1 on PC[3:0]
0x1	ALT1	USART1 on PC[7:4]
0x2	-	Reserved
0x3	NONE	Not connected to any pins

Bits 1:0 – USART0[1:0] USART 0 Communication
Write these bits to select alternative communication pins for USART 0.

Value	Name	Description
0x0	DEFAULT	USART0 on PA[3:0]
0x1	ALT1	USART0 on PA[7:4]
0x2	-	Reserved
0x3	NONE	Not connected to any pins

14.3.4 PORTMUX Control for TWI and SPI

Name: TWISPIROUTEA
Offset: 0x03
Reset: 0x00
Property: -

Bit	7	6	5	4	3	2	1	0
			TWI0[1:0]				SPI0[1:0]	
Access			R/W	R/W			R/W	R/W
Reset			0	0			0	0

Bits 5:4 – TWI0[1:0] TWI 0 Communication
Write these bits to select alternative communication pins for TWI 0.

Value	Name	Description
0x0	DEFAULT	SCL/SDA on PA[3:2], Slave mode on PC[3:2] in dual TWI mode
0x1	ALT1	SCL/SDA on PA[3:2], Slave mode on PF[3:2] in dual TWI mode
0x2	ALT2	SCL/SDA on PC[3:2], Slave mode on PF[3:2] in dual TWI mode
0x3	-	Reserved

Bits 1:0 – SPI0[1:0] SPI 0 Communication
Write these bits to select alternative communication pins for SPI 0.

Value	Name	Description
0x0	DEFAULT	SPI on PA[7:4]
0x1	ALT1	SPI on PC[3:0]
0x2	ALT2	SPI on PE[3:0]
0x3	NONE	Not connected to any pins

14.3.5 PORTMUX Control for TCA

Name: TCAROUTEA
Offset: 0x04
Reset: 0x00
Property: -

Bit	7	6	5	4	3	2	1	0
						TCA0[2:0]		
Access						R/W	R/W	R/W
Reset						0	0	0

Bits 2:0 – TCA0[2:0] TCA0 Output
Write these bits to select alternative output pins for TCA0.

Value	Name	Description
0x0	PORTA	TCA0 pins on PA[5:0]
0x1	PORTB	TCA0 pins on PB[5:0]
0x2	PORTC	TCA0 pins on PC[5:0]
0x3	PORTD	TCA0 pins on PD[5:0]
0x4	PORTE	TCA0 pins on PE[5:0]
0x5	PORTF	TCA0 pins on PF[5:0]
Other	-	Reserved

14.3.6 PORTMUX Control for TCB

Name: TCBROUTEA
Offset: 0x05
Reset: 0x00
Property: -

Bit	7	6	5	4	3	2	1	0
					TCB3	TCB2	TCB1	TCB0
Access					R/W	R/W	R/W	R/W
Reset					0	0	0	0

Bit 3 – TCB3 TCB3 Output
Write this bit to `'1'` to select alternative output pin for 16-bit timer/counter B 3.

Value	Name	Description
0x0	DEFAULT	TCB3 on PB5
0x1	ALT1	TCB3 on PC1

Bit 2 – TCB2 TCB2 Output
Write this bit to `'1'` to select alternative output pin for 16-bit timer/counter B 2.

Value	Name	Description
0x0	DEFAULT	TCB2 on PC0
0x1	ALT1	TCB2 on PB4

Bit 1 – TCB1 TCB1 Output
Write this bit to `'1'` to select alternative output pin for 16-bit timer/counter B 1.

Value	Name	Description
0x0	DEFAULT	TCB1 on PA3
0x1	ALT1	TCB1 on PF5

Bit 0 – TCB0 TCB0 Output
Write this bit to `'1'` to select alternative output pin for 16-bit timer/counter B 0.

Value	Name	Description
0x0	DEFAULT	TCB0 on PA2
0x1	ALT1	TCB0 on PF4

15. PORT - I/O Pin Configuration

15.1 Features

- General Purpose Input and Output Pins with Individual Configuration
- Output Driver with Configurable Inverted I/O and Pullup
- Input with Interrupts and Events:
  - Sense both edges
  - Sense rising edges
  - Sense falling edges
  - Sense low level
- Optional Slew Rate Control per I/O Port
- Asynchronous Pin Change Sensing That Can Wake the Device From all Sleep Modes
- Efficient and Safe Access to Port Pins
  - Hardware read-modify-write through dedicated toggle/clear/set registers
  - Mapping of often-used PORT registers into bit-accessible I/O memory space (virtual ports)

15.2 Overview

The I/O pins of the device are controlled by instances of the PORT peripheral registers. Each PORT instance has up to eight I/O pins. The PORTs are named PORTA, PORTB, PORTC, etc. Refer to the “I/O Multiplexing and Considerations” chapter in the device Data Sheet to see which pins are controlled by what instance of PORT. The offsets of the PORT instances and of the corresponding Virtual PORT instances are listed in the “Peripherals and Architecture” section.

Each of the port pins has a corresponding bit in the Data Direction (PORTx.DIR) and Data Output Value (PORTx.OUT) registers to enable that pin as an output and to define the output state. For example, pin PA3 is controlled by DIR[3] and OUT[3] of the PORTA instance.

The input value of a PORT pin is synchronized to the main clock and then made accessible as the data input value (PORTx.IN). To reduce power consumption, these input synchronizers are not clocked if the Input Sense Configuration bit field (ISC) in PORTx.PINnCTRL is INPUT_DISABLE. The value of the pin can always be read, whether the pin is configured as input or output.

The PORT also supports synchronous and asynchronous input sensing with interrupts and events for selectable pin change conditions. Asynchronous pin-change sensing means that a pin change can wake the device from all sleep modes, including the modes where no clocks are running.

All pin functions are configurable individually per pin. The pins have hardware read-modify-write (RMW) functionality for a safe and correct change of drive value and/or pull resistor configuration. The direction of one port pin can be changed without unintentionally changing the direction of any other pin.

The PORT pin configuration also controls input and output selection of other device functions.

15.2.1 Block Diagram

Figure 15-1. PORT Block Diagram

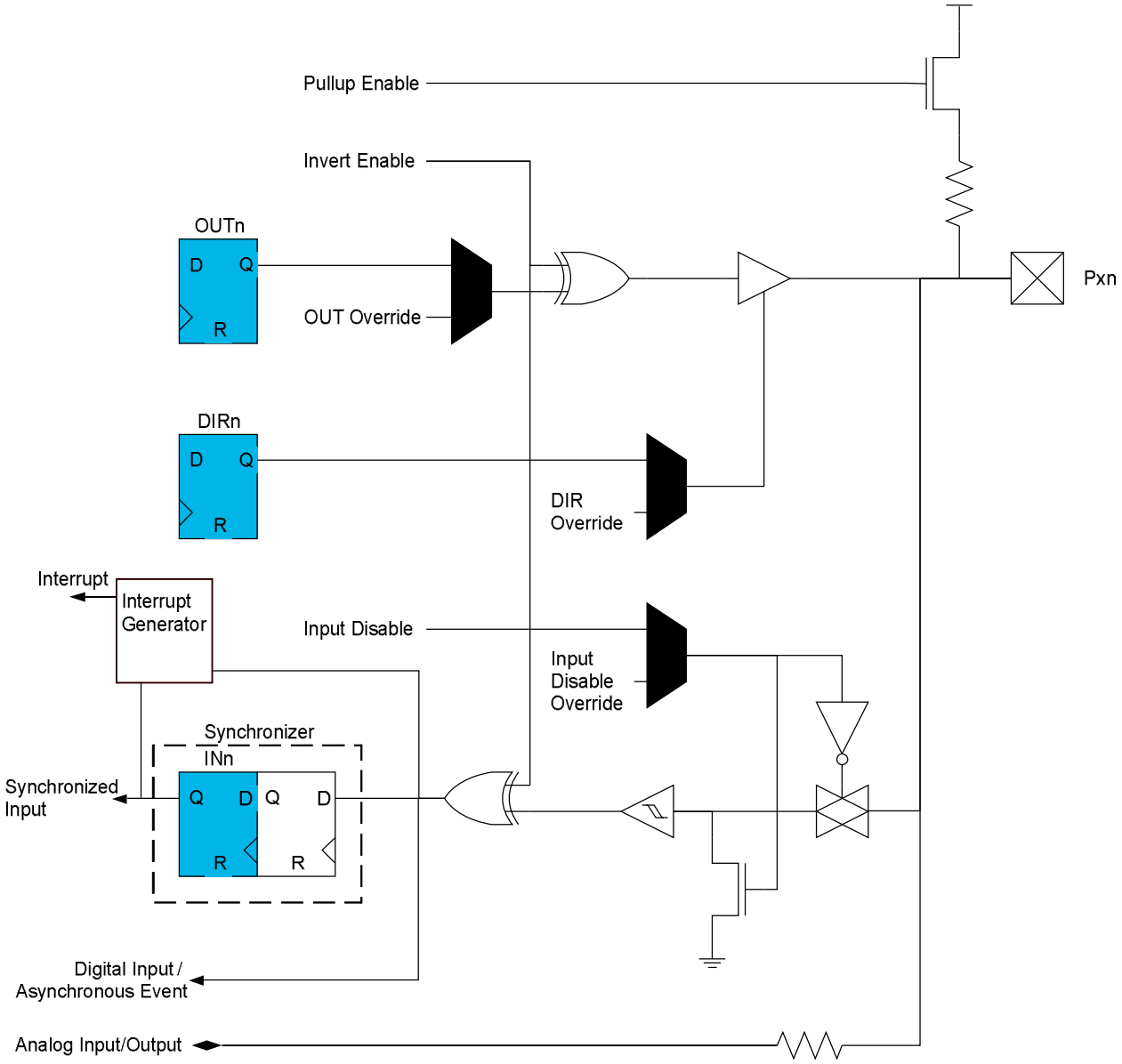

15.2.2 Signal Description

Signal	Type	Description
Pxn	I/O pin	I/O pin n on PORTx

15.3 Functional Description

15.3.1 Initialization

After Reset, all standard function device I/O pads are connected to the port with outputs tri-stated and input buffers enabled, even if there is no clock running.

For best power consumption, disable the input of unused pins and pins that are used as analog inputs or outputs.

Specific pins, such as those used for connecting a debugger, may be configured differently, as required by their special function.

15.3.2 Operation

15.3.2.1 Basic Functions

Each I/O pin Pxn can be controlled by the registers in PORTx. Each pin group x has its own set of PORT registers. The base address of the register set for pin n is at the byte address $\mathrm{PORT} + 0\mathrm{x}10 + n$. The index within that register set is n.

To use pin number n as an output only, write bit n of the PORTx.DIR register to '1'. This can be done by writing bit n in the PORTx.DIRSET register to '1', which will avoid disturbing the configuration of other pins in that group. The nth bit in the PORTx.OUT register must be written to the desired output value.

Similarly, writing a PORTx.OUTSET bit to '1' will set the corresponding bit in the PORTx.OUT register to '1'. Writing a bit in PORTx.OUTCLR to '1' will clear that bit in PORTx.OUT to zero. Writing a bit in PORTx.OUTTGL or PORTx.IN to '1' will toggle that bit in PORTx.OUT.

To use pin n as an input, bit n in the PORTx.DIR register must be written to '0' to disable the output driver. This can be done by writing bit n in the PORTx.DIRCLR register to '1', which will avoid disturbing the configuration of other pins in that group. The input value can be read from bit n in register PORTx.IN as long as the ISC bit is not set to INPUT_DISABLE.

Writing a bit to '1' in PORTx.DIRTGL will toggle that bit in PORTx.DIR and toggle the direction of the corresponding pin.

15.3.2.2 Pin Configuration

The Pin n Configuration register (PORTx.PINnCTRL) is used to configure inverted I/O, pullup, and input sensing of a pin.

All input and output on the respective pin n can be inverted by writing a '1' to the Inverted I/O Enable bit (INVEN) in PORTx.PINnCTRL.

Toggling the INVEN bit causes an edge on the pin, which can be detected by all peripherals using this pin, and is seen by interrupts or Events if enabled.

Pullup of pin n is enabled by writing a '1' to the Pullup Enable bit (PULLUPEN) in PORTx.PINnCTRL.

Changes of the signal on a pin can trigger an interrupt. The exact conditions are defined by writing to the Input/Sense bit field (ISC) in PORTx.PINnCTRL.

When setting or changing interrupt settings, take these points into account:

- If an INVEN bit is toggled in the same cycle as the interrupt setting, the edge caused by the inversion toggling may not cause an interrupt request.
- If an input is disabled while synchronizing an interrupt, that interrupt may be requested on re-enabling the input, even if it is re-enabled with a different interrupt setting.
- If the interrupt setting is changed while synchronizing an interrupt, that interrupt may not be accepted.
- Only a few pins support full asynchronous interrupt detection, see I/O Multiplexing and Considerations. These limitations apply for waking the system from sleep:

Interrupt Type	Fully Asynchronous Pins	Other Pins
BOTHEDGES	Will wake system	Will wake system
RISING	Will wake system	Will not wake system
FALLING	Will wake system	Will not wake system
LEVEL	Will wake system	Will wake system

15.3.2.3 Virtual Ports

The Virtual PORT registers map the most frequently used regular PORT registers into the bit-accessible I/O space. Writing to the Virtual PORT registers has the same effect as writing to the regular registers, but allows for memory-specific instructions, such as bit-manipulation instructions, which are not valid for the extended I/O memory space where the regular PORT registers reside.

Table 15-1. Virtual Port Mapping

Regular PORT Register	Mapped to Virtual PORT Register
PORT.DIR	VPORT.DIR
PORT.OUT	VPORT.OUT
PORT.IN	VPORT.IN
PORT.INTFLAG	VPORT.INTFLAG

15.3.2.4 Peripheral Override

Peripherals such as USARTs and timers may be connected to I/O pins. Such peripherals will usually have a primary and optionally also alternate I/O pin connection, selectable by PORTMUX. By configuring and enabling such peripherals, the general-purpose I/O pin behavior normally controlled by PORT will be overridden by the peripheral in a peripheral-dependent way. Some peripherals may not override all of the PORT registers, leaving the PORT module to control some aspects of the I/O pin operation. Refer to the description of each peripheral for information on the peripheral override. Any pin in a PORT which is not overridden by a peripheral will continue to operate as a general-purpose I/O pin.

15.3.3 Interrupts

Table 15-2. Available Interrupt Vectors and Sources

Name	Vector Description	Conditions
PORTx	PORT interrupt	INTn in PORTx.INTFLAGS is raised as configured by ISC bit in PORTx.PINnCTRL.

Each PORT pin n can be configured as an interrupt source. Each interrupt can be individually enabled or disabled by writing to ISC in PORTx.PINnCTRL.

When an interrupt condition occurs, the corresponding Interrupt Flag is set in the Interrupt Flags register of the peripheral (*peripheral*.INTFLAGS).

An interrupt request is generated when the corresponding interrupt source is enabled and the Interrupt Flag is set. The interrupt request remains active until the Interrupt Flag is cleared. See the peripheral's INTFLAGS register for details on how to clear Interrupt Flags.

Asynchronous Sensing Pin Properties

PORT supports synchronous and asynchronous input sensing with interrupts for selectable pin change conditions. Asynchronous pin change sensing means that a pin change can wake the device from all sleep modes, including modes where no clocks are running.

Table 15-3. Behavior Comparison of Fully/Partly Asynchronous Sense Pin

Property	Synchronous or Partly Asynchronous Sense Support	Full Asynchronous Sense Support
Minimum pulse width to trigger interrupt	Minimum one system clock cycle	Less than a system clock cycle
Waking the device from sleep	From all interrupt sense configurations from sleep modes with Main Clock running. Only from BOTHEDGES or LEVEL interrupt sense configuration from sleep modes with Main Clock stopped.	From all interrupt sense configurations from all sleep modes
Interrupt “dead time”	No new interrupt for three cycles after the previous	Less than a system clock cycle
Minimum Wake-up pulse length	Value on pad must be kept until the system clock has restarted	Less than a system clock cycle

15.3.4 Events

All PORT pins are asynchronous event system generators. PORT has as many event generators as there are PORT pins in the device. Each event system output from PORT is the value present on the corresponding pin if the digital input driver is enabled. If a pin input driver is disabled, the corresponding event system output is zero.

PORT has no event inputs.

15.3.5 Sleep Mode Operation

With the exception of interrupts and input synchronization, all pin configurations are independent of sleep mode. Peripherals connected to the Ports can be affected by sleep modes, described in the respective peripherals' documentation.

The PORT peripheral will always use the Main Clock. Input synchronization will halt when this clock stops.

15.4 Register Summary - PORTx

Offset	Name	Bit Pos.								
0x00	DIR	7:0	DIR[7:0]							
0x01	DIRSET	7:0	DIRSET[7:0]							
0x02	DIRCLR	7:0	DIRCLR[7:0]							
0x03	DIRTGL	7:0	DIRTGL[7:0]							
0x04	OUT	7:0	OUT[7:0]							
0x05	OUTSET	7:0	OUTSET[7:0]							
0x06	OUTCLR	7:0	OUTCLR[7:0]							
0x07	OUTTGL	7:0	OUTTGL[7:0]							
0x08	IN	7:0	IN[7:0]							
0x09	INTFLAGS	7:0	INT[7:0]							
0x0A	PORTCTRL	7:0								SRL
0x0B ... 0x0F	Reserved									
0x10	PIN0CTRL	7:0	INVEN				PULLUPEN	ISC[2:0]		
0x11	PIN1CTRL	7:0	INVEN				PULLUPEN	ISC[2:0]		
0x12	PIN2CTRL	7:0	INVEN				PULLUPEN	ISC[2:0]		
0x13	PIN3CTRL	7:0	INVEN				PULLUPEN	ISC[2:0]		
0x14	PIN4CTRL	7:0	INVEN				PULLUPEN	ISC[2:0]		
0x15	PIN5CTRL	7:0	INVEN				PULLUPEN	ISC[2:0]		
0x16	PIN6CTRL	7:0	INVEN				PULLUPEN	ISC[2:0]		
0x17	PIN7CTRL	7:0	INVEN				PULLUPEN	ISC[2:0]		

15.5 Register Description - Ports

15.5.1 Data Direction

Name: DIR
Offset: 0x00
Reset: 0x00
Property: -

Bit	7	6	5	4	3	2	1	0
	DIR[7:0]							
Access	R/W	R/W	R/W	R/W	R/W	R/W	R/W	R/W
Reset	0	0	0	0	0	0	0	0

Bits 7:0 – DIR[7:0] Data Direction
This bit field controls output enable for the individual pins of the Port.
Writing a ‘1’ to PORTx.DIR[n] configures and enables pin n as an output pin.
Writing a ‘0’ to PORTx.DIR[n] configures pin n as an input-only pin. Its properties can be configured by writing to the ISC bit in PORTx.PINnCTRL.
PORTx.DIRn controls only the output enable. Setting PORTx.DIR[n] to ‘1’ does not disable the pin input.

15.5.2 Data Direction Set

Name: DIRSET
Offset: 0x01
Reset: 0x00
Property: -

Bit	7	6	5	4	3	2	1	0
	DIRSET[7:0]							
Access	R/W	R/W	R/W	R/W	R/W	R/W	R/W	R/W
Reset	0	0	0	0	0	0	0	0

Bits 7:0 – DIRSET[7:0] Data Direction Set
This bit field can be used instead of a read-modify-write to set individual pins as output.
Writing a '1' to DIRSET[n] will set the corresponding PORTx.DIR[n] bit.
Reading this bit field will always return the value of PORTx.DIR.

15.5.3 Data Direction Clear

Name: DIRCLR
Offset: 0x02
Reset: 0x00
Property: -

Bit	7	6	5	4	3	2	1	0
	DIRCLR[7:0]							
Access	R/W	R/W	R/W	R/W	R/W	R/W	R/W	R/W
Reset	0	0	0	0	0	0	0	0

Bits 7:0 – DIRCLR[7:0] Data Direction Clear
This register can be used instead of a read-modify-write to configure individual pins as input-only.
Writing a '1' to DIRCLR[n] will clear the corresponding bit in PORTx.DIR.
Reading this bit field will always return the value of PORTx.DIR.

15.5.4 Data Direction Toggle

Name: DIRTGL
Offset: 0x03
Reset: 0x00
Property: -

Bit	7	6	5	4	3	2	1	0
	DIRTGL[7:0]							
Access	R/W	R/W	R/W	R/W	R/W	R/W	R/W	R/W
Reset	0	0	0	0	0	0	0	0

Bits 7:0 – DIRTGL[7:0] Data Direction Toggle
This bit field can be used instead of a read-modify-write to toggle the direction of individual pins.
Writing a '1' to DIRTGL[n] will toggle the corresponding bit in PORTx.DIR.
Reading this bit field will always return the value of PORTx.DIR.

15.5.5 Output Value

Name: OUT
Offset: 0x04
Reset: 0x00
Property: -

Bit	7	6	5	4	3	2	1	0
	OUT[7:0]							
Access	R/W	R/W	R/W	R/W	R/W	R/W	R/W	R/W
Reset	0	0	0	0	0	0	0	0

Bits 7:0 – OUT[7:0] Output Value
This bit field defines the data output value for the individual pins of the port.
If OUT[n] is written to '1', pin n is driven high.
If OUT[n] is written to '0', pin n is driven low.
In order to have any effect, the pin direction must be configured as output.

15.5.6 Output Value Set

Name: OUTSET
Offset: 0x05
Reset: 0x00
Property: -

Bit	7	6	5	4	3	2	1	0
	OUTSET[7:0]							
Access	R/W	R/W	R/W	R/W	R/W	R/W	R/W	R/W
Reset	0	0	0	0	0	0	0	0

Bits 7:0 – OUTSET[7:0] Output Value Set
This bit field can be used instead of a read-modify-write to set the output value of individual pins to '1'.
Writing a '1' to OUTSET[n] will set the corresponding bit in PORTx.OUT.
Reading this bit field will always return the value of PORTx.OUT.

15.5.7 Output Value Clear

Name: OUTCLR
Offset: 0x06
Reset: 0x00
Property: -

Bit	7	6	5	4	3	2	1	0
	OUTCLR[7:0]							
Access	R/W	R/W	R/W	R/W	R/W	R/W	R/W	R/W
Reset	0	0	0	0	0	0	0	0

Bits 7:0 – OUTCLR[7:0] Output Value Clear
This register can be used instead of a read-modify-write to clear the output value of individual pins to '0'.
Writing a '1' to OUTCLR[n] will clear the corresponding bit in PORTx.OUT.
Reading this bit field will always return the value of PORTx.OUT.

15.5.8 Output Value Toggle

Name: OUTTGL
Offset: 0x07
Reset: 0x00
Property: -

Bit	7	6	5	4	3	2	1	0
	OUTTGL[7:0]							
Access	R/W	R/W	R/W	R/W	R/W	R/W	R/W	R/W
Reset	0	0	0	0	0	0	0	0

Bits 7:0 – OUTTGL[7:0] Output Value Toggle
This register can be used instead of a read-modify-write to toggle the output value of individual pins.
Writing a '1' to OUTTGL[n] will toggle the corresponding bit in PORTx.OUT.
Reading this bit field will always return the value of PORTx.OUT.

15.5.9 Input Value

Name: IN
Offset: 0x08
Reset: 0x00
Property: -

Bit	7	6	5	4	3	2	1	0
	IN[7:0]							
Access	R/W	R/W	R/W	R/W	R/W	R/W	R/W	R/W
Reset	0	0	0	0	0	0	0	0

Bits 7:0 – IN[7:0] Input Value
This register shows the value present on the pins if the digital input driver is enabled. IN[n] shows the value of pin n of the Port. If the digital input buffers are disabled, the input is not sampled and cannot be read.
Writing to a bit of PORTx.IN will toggle the corresponding bit in PORTx.OUT.

15.5.10 Interrupt Flags

Name: INTFLAGS
Offset: 0x09
Reset: 0x00
Property: -

Bit	7	6	5	4	3	2	1	0
	INT[7:0]							
Access	R/W	R/W	R/W	R/W	R/W	R/W	R/W	R/W
Reset	0	0	0	0	0	0	0	0

Bits 7:0 – INT[7:0] Interrupt Pin Flag
The INT Flag is set when a pin change/state matches the pin's input sense configuration.
Writing a '1' to a flag's bit location will clear the flag.
For enabling and executing the interrupt, refer to ISC bit description in PORTx.PINnCTRL.

15.5.11 Port Control

Name: PORTCTRL
Offset: 0x0A
Reset: 0x00
Property: -

This register contains the slew rate limit enable bit for this port.

Bit	7	6	5	4	3	2	1	0
								SRL
Access								R/W
Reset								0

Bit 0 – SRL Slew Rate Limit Enable
Writing a '1' to this bit enables slew rate limitation for all pins on this port.

15.5.12 Pin n Control

Name: PINCTRL
Offset: 0x10 + n*0x01 [n=0..7]
Reset: 0x00
Property: -

Bit	7	6	5	4	3	2	1	0
	INVEN				PULLUPEN	ISC[2:0]		
Access	R/W				R/W	R/W	R/W	R/W
Reset	0				0	0	0	0

Bit 7 – INVEN Inverted I/O Enable

Value	Description
0	Input and output values are not inverted
1	Input and output values are inverted

Bit 3 – PULLUPEN Pullup Enable

Value	Description
0	Pullup disabled for pin n
1	Pullup enabled for pin n

Bits 2:0 – ISC[2:0] Input/Sense Configuration
These bits configure the input and sense configuration of pin n. The sense configuration determines how a port interrupt can be triggered. If the input buffer is disabled, the input cannot be read in the IN register.

Value	Name	Description
0x0	INTDISABLE	Interrupt disabled but input buffer enabled
0x1	BOTHEDGES	Interrupt enabled with sense on both edges
0x2	RISING	Interrupt enabled with sense on rising edge
0x3	FALLING	Interrupt enabled with sense on falling edge
0x4	INPUT_DISABLE	Interrupt and digital input buffer disabled
0x5	LEVEL	Interrupt enabled with sense on low level
other	-	Reserved

15.6 Register Summary - VPORTx

Offset	Name	Bit Pos.								
0x00	DIR	7:0	DIR[7:0]							
0x01	OUT	7:0	OUT[7:0]							
0x02	IN	7:0	IN[7:0]							
0x03	INTFLAGS	7:0	INT[7:0]							

15.7 Register Description - Virtual Ports

15.7.1 Data Direction

Name: DIR
Offset: 0x00
Reset: 0x00
Property: -

Writing to the Virtual PORT registers has the same effect as writing to the regular registers, but allows for memory-specific instructions, such as bit-manipulation instructions, which are not valid for the extended I/O memory space where the regular PORT registers reside.

Bit	7	6	5	4	3	2	1	0
	DIR[7:0]							
Access	R/W	R/W	R/W	R/W	R/W	R/W	R/W	R/W
Reset	0	0	0	0	0	0	0	0

Bits 7:0 – DIR[7:0] Data Direction
This bit field controls output enable for the individual pins of the Port.

15.7.2 Output Value

Name: OUT
Offset: 0x01
Reset: 0x00
Property: -

Writing to the Virtual PORT registers has the same effect as writing to the regular registers, but allows for memory-specific instructions, such as bit-manipulation instructions, which are not valid for the extended I/O memory space where the regular PORT registers reside.

Bit	7	6	5	4	3	2	1	0
	OUT[7:0]							
Access	R/W	R/W	R/W	R/W	R/W	R/W	R/W	R/W
Reset	0	0	0	0	0	0	0	0

Bits 7:0 – OUT[7:0] Output Value
This bit field selects the data output value for the individual pins in the Port.

15.7.3 Input Value

Name: IN
Offset: 0x02
Reset: 0x00
Property: -

Writing to the Virtual PORT registers has the same effect as writing to the regular registers, but allows for memory-specific instructions, such as bit-manipulation instructions, which are not valid for the extended I/O memory space where the regular PORT registers reside.

Bit	7	6	5	4	3	2	1	0
	IN[7:0]							
Access	R/W	R/W	R/W	R/W	R/W	R/W	R/W	R/W
Reset	0	0	0	0	0	0	0	0

Bits 7:0 – IN[7:0] Input Value
This bit field holds the value present on the pins if the digital input buffer is enabled.
Writing to a bit of VPORTx.IN will toggle the corresponding bit in VPORTx.OUT.

15.7.4 Interrupt Flag

Name: INTFLAGS
Offset: 0x03
Reset: 0x00
Property: -

Writing to the Virtual PORT registers has the same effect as writing to the regular registers, but allows for memory-specific instructions, such as bit-manipulation instructions, which are not valid for the extended I/O memory space where the regular PORT registers reside.

Bit	7	6	5	4	3	2	1	0
	INT[7:0]							
Access	R	R	R	R	R	R	R	R
Reset	0	0	0	0	0	0	0	0

Bits 7:0 – INT[7:0] Interrupt Pin Flag
The INT flag is set when a pin change/state matches the pin's input sense configuration, and the pin is configured as source for port interrupt.
Writing a '1' to this flag's bit location will clear the flag.
For enabling and executing the interrupt, refer to the ISC bits in PORTx.PINnCTRL.

16. BOD - Brown-out Detect

16.1 Features

- Brown-out Detection monitors the power supply to avoid operation below a programmable level
- There are three modes:
  - Enabled
  - Sampled
  - Disabled
- Separate selection of mode for Active and Sleep modes
- Voltage Level Monitor (VLM) with Interrupt
- Programmable VLM Level Relative to the BOD Level

16.2 Overview

The Brown-out Detector (BOD) monitors the power supply and compares the voltage with two programmable brown-out threshold levels. The brown-out threshold level defines when to generate a Reset. A Voltage Level Monitor (VLM) monitors the power supply and compares it to a threshold higher than the BOD threshold. The VLM can then generate an interrupt request as an "early warning" when the supply voltage is about to drop below the VLM threshold. The VLM threshold level is expressed as a percentage above the BOD threshold level.

The BOD is mainly controlled by fuses. The mode used in Standby Sleep mode and Power-Down Sleep mode can be altered in normal program execution. The VLM part of the BOD is controlled by I/O registers as well.

When activated, the BOD can operate in Enabled mode, where the BOD is continuously active, and in Sampled mode, where the BOD is activated briefly at a given period to check the supply voltage level.

16.2.1 Block Diagram

Figure 16-1. BOD Block Diagram

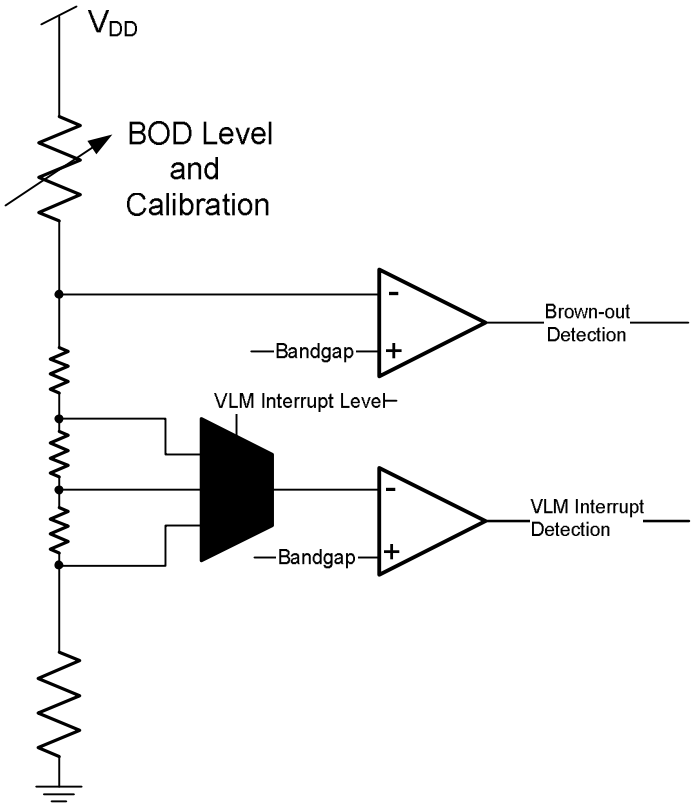

16.3 Functional Description

16.3.1 Initialization

The BOD settings are loaded from fuses during Reset. The BOD level and operating mode in Active and Idle Sleep mode are set by fuses and cannot be changed by the CPU. The operating mode in Standby and Power-Down Sleep mode is loaded from fuses and can be changed by software.

The Voltage Level Monitor function can be enabled by writing a '1' to the VLM Interrupt Enable bit (VLMIE) in the Interrupt Control register (BOD.INTCTRL). The VLM interrupt is configured by writing the VLM Configuration bits (VLMCFG) in BOD.INTCTRL. An interrupt is requested when the supply voltage crosses the VLM threshold either from above, from below, or from any direction.

The VLM functionality will follow the BOD mode. If the BOD is turned OFF, the VLM will not be enabled, even if the VLMIE is '1'. If the BOD is using Sampled mode, the VLM will also be sampled. When enabling VLM interrupt, the interrupt flag will always be set if VLMCFG equals 0x2 and may be set if VLMCFG is configured to 0x0 or 0x1.

The VLM threshold is defined by writing the VLM Level bits (VLMLVL) in the Control A register (BOD.VLMCTRLA).

16.3.2 Interrupts

Table 16-1. Available Interrupt Vectors and Sources

Name	Vector Description	Conditions
VLM	Voltage Level Monitor	Supply voltage crossing the VLM threshold as configured by VLMCFG in BOD.INTCTRL

The VLM interrupt will not be executed if the CPU is halted in debug mode.

When an interrupt condition occurs, the corresponding interrupt flag is set in the Interrupt Flags register of the peripheral (*peripheral*.INTFLAGS).

An interrupt source is enabled or disabled by writing to the corresponding enable bit in the peripheral's Interrupt Control (*peripheral*.INTCTRL) register.

An interrupt request is generated when the corresponding interrupt source is enabled, and the interrupt flag is set. The interrupt request remains active until the interrupt flag is cleared. See the peripheral's INTFLAGS register for details on how to clear interrupt flags.

16.3.3 Sleep Mode Operation

There are two separate fuses defining the BOD configuration in different sleep modes; One fuse defines the mode used in Active mode and Idle Sleep mode (ACTIVE in FUSE.BODCFG) and is written to the ACTIVE bits in the Control A register (BOD.CTRLA). The second fuse (SLEEP in FUSE.BODCFG) selects the mode used in Standby Sleep mode and Power-Down Sleep mode and is loaded into the SLEEP bits in the Control A register (BOD.CTRLA).

The operating mode in Active mode and Idle Sleep mode (i.e., ACTIVE in BOD.CTRLA) cannot be altered by software. The operating mode in Standby Sleep mode and Power-Down Sleep mode can be altered by writing to the SLEEP bits in the Control A register (BOD.CTRLA).

When the device is going into Standby Sleep mode or Power-Down Sleep mode, the BOD will change operation mode as defined by SLEEP in BOD.CTRLA. When the device is waking up from Standby or Power-Down Sleep mode, the BOD will operate in the mode defined by the ACTIVE bit field in BOD.CTRLA.

16.3.4 Configuration Change Protection

This peripheral has registers that are under Configuration Change Protection (CCP). In order to write to these, a certain key must be written to the CPU.CCP register first, followed by a write access to the protected bits within four CPU instructions.

It is possible to try writing to these registers any time, but the values are not altered.

The following registers are under CCP:

Table 16-2. Registers Under Configuration Change Protection

Register	Key
SLEEP in BOD.CTRLA	IOREG

16.4 Register Summary - BOD

Offset	Name	Bit Pos.								
0x00	CTRLA	7:0				SAMPFREQ	ACTIVE[1:0]		SLEEP[1:0]	
0x01	CTRLB	7:0						LVL[2:0]		
0x02 ... 0x07	Reserved									
0x08	VLMCTRLA	7:0							VLMLVL[1:0]	
0x09	INTCTRL	7:0						VLMCFG[1:0]		VLMIE
0x0A	INTFLAGS	7:0								VLMIF
0x0B	STATUS	7:0								VLMS

16.5 Register Description

16.5.1 Control A

Name: CTRLA
Offset: 0x00
Reset: Loaded from fuse
Property: Configuration Change Protection

Bit	7	6	5	4	3	2	1	0
				SAMPFREQ	ACTIVE[1:0]		SLEEP[1:0]	
Access				R	R	R	R/W	R/W
Reset				x	x	x	x	x

Bit 4 – SAMPFREQ Sample Frequency
This bit selects the BOD sample frequency.
The Reset value is loaded from the SAMPFREQ bit in FUSE.BODCFG. This bit is under Configuration Change Protection (CCP).

Value	Description
0x0	Sample frequency is 1 kHz
0x1	Sample frequency is 125 Hz

Bits 3:2 – ACTIVE[1:0] Active
These bits select the BOD operation mode when the device is in Active or Idle mode.
The Reset value is loaded from the ACTIVE bits in FUSE.BODCFG.

Value	Description
0x0	Disabled
0x1	Enabled
0x2	Sampled
0x3	Enabled with wake-up halted until BOD is ready

Bits 1:0 – SLEEP[1:0] Sleep
These bits select the BOD operation mode when the device is in Standby or Power-Down Sleep mode. The Reset value is loaded from the SLEEP bits in FUSE.BODCFG.
These bits are under Configuration Change Protection (CCP).

Value	Description
0x0	Disabled
0x1	Enabled
0x2	Sampled
0x3	Reserved

16.5.2 Control B

Name: CTRLB
Offset: 0x01
Reset: Loaded from fuse
Property: -

Bit	7	6	5	4	3	2	1	0
						LVL[2:0]		
Access	R	R	R	R	R	R	R	R
Reset	0	0	0	0	0	x	x	x

Bits 2:0 – LVL[2:0] BOD Level
These bits select the BOD threshold level.
The Reset value is loaded from the BOD Level bits (LVL) in the BOD Configuration Fuse (FUSE.BODCFG).

Value	Name	Description
0x0	BODLEVEL0	1.8V
0x2	BODLEVEL2	2.6V
0x7	BODLEVEL7	4.3V

Note:
- Refer to the *BOD and POR Characteristics* in *Electrical Characteristics* for further details.
- Values in the description are typical values.

16.5.3 VLM Control A

Name: VLMCTRLA
Offset: 0x08
Reset: 0x00
Property: -

Bit	7	6	5	4	3	2	1	0
							VLMLVL[1:0]	
Access							R/W	R/W
Reset							0	0

Bits 1:0 – VLMLVL[1:0] VLM Level
These bits select the VLM threshold relative to the BOD threshold (LVL in BOD.CTRLB).

Value	Description
0x0	VLM threshold 5% above BOD threshold
0x1	VLM threshold 15% above BOD threshold
0x2	VLM threshold 25% above BOD threshold
other	Reserved

16.5.4 Interrupt Control

Name: INTCTRL
Offset: 0x09
Reset: 0x00
Property: -

Bit	7	6	5	4	3	2	1	0
						VLMCFG[1:0]		VLMIE
Access						R/W	R/W	R/W
Reset						0	0	0

Bits 2:1 – VLMCFG[1:0] VLM Configuration
These bits select which incidents will trigger a VLM interrupt.

Value	Description
`0x0`	Voltage crosses VLM threshold from above
`0x1`	Voltage crosses VLM threshold from below
`0x2`	Either direction is triggering an interrupt request
`Other`	Reserved

Bit 0 – VLMIE VLM Interrupt Enable
Writing a '1' to this bit enables the VLM interrupt.

16.5.5 VLM Interrupt Flags

Name: INTFLAGS
Offset: 0x0A
Reset: 0x00
Property: -

Bit	7	6	5	4	3	2	1	0
								VLMIF
Access								R/W
Reset								0

Bit 0 – VLMIF VLM Interrupt Flag
This flag is set when a trigger from the VLM is given, as configured by the VLMCFG bit in the BOD.INTCTRL register. The flag is only updated when the BOD is enabled.

16.5.6 VLM Status

Name: STATUS
Offset: 0x0B
Reset: 0x00
Property: -

Bit	7	6	5	4	3	2	1	0
								VLMS
Access								R
Reset								0

Bit 0 – VLMS VLM Status
This bit is only valid when the BOD is enabled.

Value	Description
0	The voltage is above the VLM threshold level
1	The voltage is below the VLM threshold level

17. VREF - Voltage Reference

17.1 Features

- Programmable voltage reference sources:
  - For ADC0 peripheral
  - For AC0 peripheral
- Each reference source supports different voltages:
  - 0.55V
  - 1.1V
  - 1.5V
  - 2.5V
  - 4.3V
  - AVDD

17.2 Overview

The Voltage Reference buffer (VREF) provides control registers for selecting between multiple internal reference levels. The internal references are generated from the internal bandgap.

When a peripheral that requires a voltage reference is enabled the corresponding voltage reference buffer and bandgap is automatically enabled.

17.2.1 Block Diagram

Figure 17-1. VREF Block Diagram

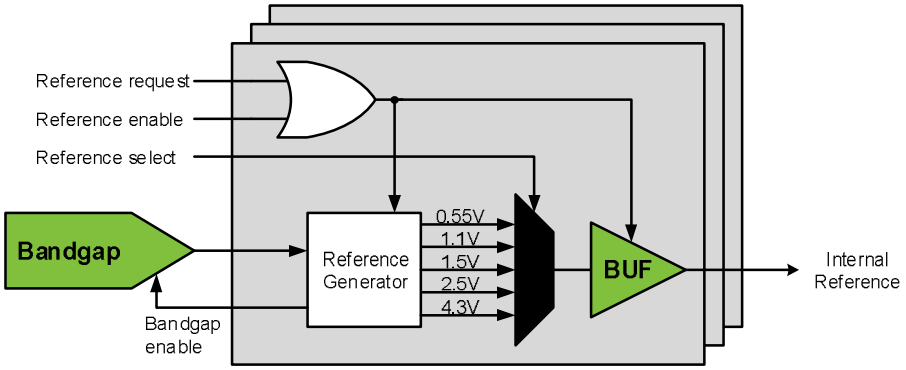

17.3 Functional Description

17.3.1 Initialization

The output level from the reference buffer should be selected (ADC0REFSEL and AC0REFSEL in VREF.CTRLA) before the respective modules are enabled. The reference buffer is then automatically enabled when requested by a peripheral. Changing the reference while these modules are enabled could lead to unpredictable behavior.

The VREF module and reference voltage sources can be forced to be ON, independent of being required by a peripheral, by writing to the respective Force Enable bits (ADC0REFEN, AC0REFEN) in the Control B register (VREF.CTRLB). This can be used to remove the reference start-up time, at the cost of increased power consumption.

17.4 Register Summary - VREF

Offset	Name	Bit Pos.								
0x00	CTRLA	7:0		ADC0REFSEL[2:0]				AC0REFSEL[2:0]		
0x01	CTRLB	7:0							ADC0REFEN	AC0REFEN

17.5 Register Description

17.5.1 Control A

Name: CTRLA
Offset: 0x00
Reset: 0x00
Property: -

Bit	7	6	5	4	3	2	1	0
		ADC0REFSEL[2:0]				AC0REFSEL[2:0]		
Access		R/W	R/W	R/W		R/W	R/W	R/W
Reset		0	0	0		0	0	0

Bits 6:4 – ADC0REFSEL[2:0] ADC0 Reference Select
These bits select the reference voltage for ADC0.

Value	Name	Description
0x0	0V55	0.55V internal reference
0x1	1V1	1.1V internal reference
0x2	2V5	2.5V internal reference
0x3	4V3	4.3V internal reference
0x4	1V5	1.5V internal reference
Other	-	Reserved

Note: Refer to *VREF* in the *Electrical Characteristics* section for further details.

Bits 2:0 – AC0REFSEL[2:0] AC0 Reference Select
These bits select the reference voltage for AC0.

Value	Name	Description
0x0	0V55	0.55V internal reference
0x1	1V1	1.1V internal reference
0x2	2V5	2.5V internal reference
0x3	4V3	4.3V internal reference
0x4	1V5	1.5V internal reference
0x5	-	Reserved
0x6	-	Reserved
0x7	AVDD	AVDD

Note: Refer to *VREF* in the *Electrical Characteristics* section for further details.

17.5.2 Control B

Name: CTRLB
Offset: 0x01
Reset: 0x00
Property: -

Bit	7	6	5	4	3	2	1	0
							ADC0REFEN	AC0REFEN
Access							R/W	R/W
Reset							0	0

Bit 1 – ADC0REFEN ADC0 Reference Force Enable
Writing a `'1'` to this bit forces the voltage reference for ADC0 to be enabled, even if it is not requested.
Writing a `'0'` to this bit allows to automatic enable/disable the reference source when not requested.

Bit 0 – AC0REFEN AC0 DACREF Reference Force Enable
Writing a `'1'` to this bit forces the voltage reference for AC0 DACREF to be enabled, even if it is not requested.
Writing a `'0'` to this bit allows to automatic enable/disable the reference source when not requested.

18. WDT - Watchdog Timer

18.1 Features

- Issues a System Reset if the Watchdog Timer is not Cleared Before its Time-out Period
- Operating Asynchronously from System Clock Using an Independent Oscillator
- Using the 1 KHz Output of the 32 KHz Ultra Low-Power Oscillator (OSCULP32K)
- 11 Selectable Time-out Periods, from 8 ms to 8s
- Two Operation modes:
  - Normal mode
  - Window mode
- Configuration Lock to Prevent Unwanted Changes
- Closed Period Timer Activation After First WDT Instruction for Easy Setup

18.2 Overview

The Watchdog Timer (WDT) is a system function for monitoring correct program operation. It allows the system to recover from situations such as runaway or deadlocked code, by issuing a Reset. When enabled, the WDT is a constantly running timer configured to a predefined time-out period. If the WDT is not reset within the time-out period, it will issue a system Reset. The WDT is reset by executing the `WDR` (Watchdog Timer Reset) instruction from software.

The WDT has two modes of operation; Normal mode and Window mode. The settings in the Control A register (WDT.CTRLA) determine the mode of operation.

A Window mode defines a time slot or "window" inside the time-out period during which the WDT must be reset. If the WDT is reset outside this window, either too early or too late, a system Reset will be issued. Compared to the Normal mode, the Window mode can catch situations where a code error causes constant `WDR` execution.

When enabled, the WDT will run in Active mode and all Sleep modes. It is asynchronous (i.e., running from a CPU independent clock source). For this reason, it will continue to operate and be able to issue a system Reset even if the main clock fails.

The CCP mechanism ensures that the WDT settings cannot be changed by accident. For increased safety, a configuration for locking the WDT settings is available.

18.2.1 Block Diagram

Figure 18-1. WDT Block Diagram

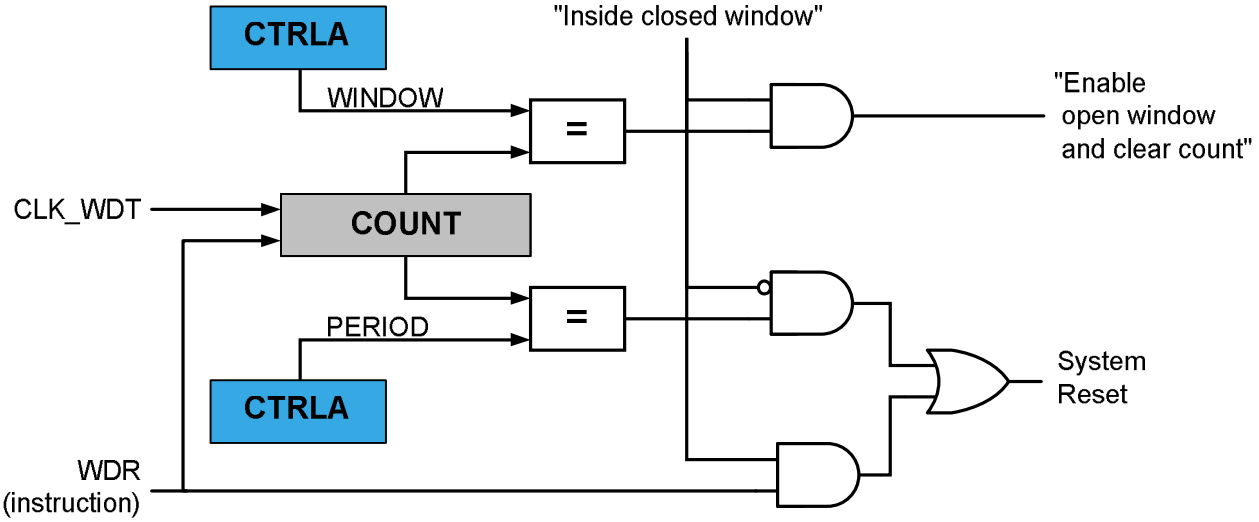

18.2.2 Signal Description

Not applicable.

18.3 Functional Description

18.3.1 Initialization

- The WDT is enabled when a non-zero value is written to the Period bits (PERIOD) in the Control A register (WDT.CTRLA).
- Optional: Write a non-zero value to the Window bits (WINDOW) in WDT.CTRLA to enable Window mode operation.

All bits in the Control A register and the Lock bit (LOCK) in the STATUS register (WDT.STATUS) are write protected by the Configuration Change Protection mechanism.

The Reset value of WDT.CTRLA is defined by a fuse (FUSE.WDTCFG), so the WDT can be enabled at boot time. If this is the case, the LOCK bit in WDT.STATUS is set at boot time.

18.3.2 Clocks

A 1 KHz Oscillator Clock (CLK_WDT_OSC) is sourced from the internal Ultra Low-Power Oscillator, OSCULP32K. Due to the ultra low-power design, the oscillator is not very accurate, and so the exact time-out period may vary from device to device. This variation must be kept in mind when designing software that uses the WDT to ensure that the time-out periods used are valid for all devices.

The Counter Clock CLK_WDT_OSC is asynchronous to the system clock. Due to this asynchronicity, writing to the WDT Control register will require synchronization between the clock domains.

18.3.3 Operation

18.3.3.1 Normal Mode

In Normal mode operation, a single time-out period is set for the WDT. If the WDT is not reset from software using the `WDR` any time before the time-out occurs, the WDT will issue a system Reset.

A new WDT time-out period will be started each time the WDT is reset by `WDR`.

There are 11 possible WDT time-out periods (TO_{WDT}), selectable from 8 ms to 8s by writing to the Period bit field (PERIOD) in the Control A register (WDT.CTRLA).

Figure 18-2. Normal Mode Operation

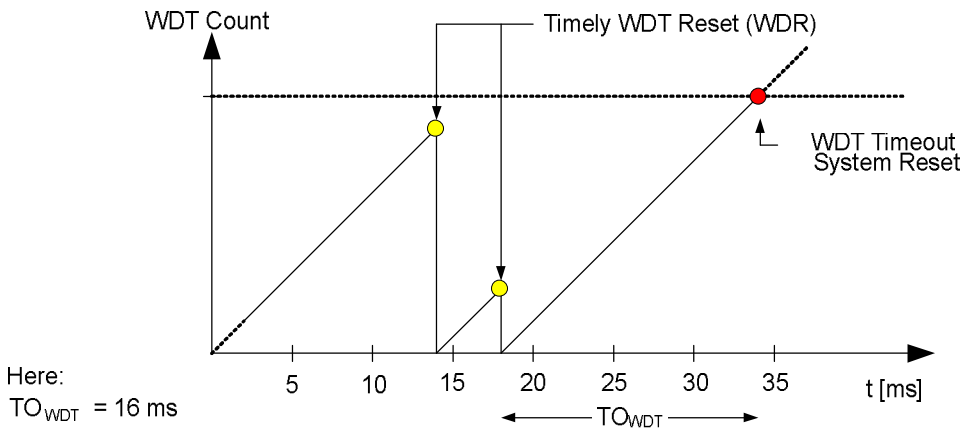

Normal mode is enabled as long as the WINDOW bit field in the Control A register (WDT.CTRLA) is 0x0.

18.3.3.2 Window Mode

In Window mode operation, the WDT uses two different time-out periods; a closed Window Time-out period (TO_{WDTW}) and the normal time-out period (TO_{WDT}):

- The closed window time-out period defines a duration from 8 ms to 8s where the WDT cannot be reset. If the WDT is reset during this period, the WDT will issue a system Reset.
- The normal WDT time-out period, which is also 8 ms to 8s, defines the duration of the open period during which the WDT can (and should) be reset. The open period will always follow the closed period, so the total duration of the time-out period is the sum of the closed window and the open window time-out periods.

When enabling Window mode or when going out of Debug mode, the first closed period is activated after the first `WDR` instruction.

If a second `WDR` is issued while a previous `WDR` is being synchronized, the second one will be ignored.

Figure 18-3. Window Mode Operation

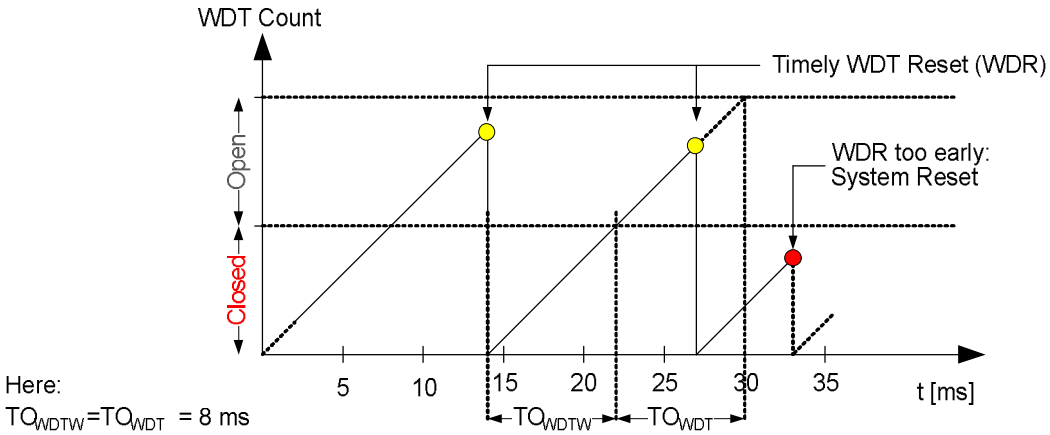

The Window mode is enabled by writing a non-zero value to the WINDOW bit field in the Control A register (WDT.CTRLA), and disabled by writing WINDOW=0x0.

18.3.3.3 Configuration Protection and Lock

The WDT provides two security mechanisms to avoid unintentional changes to the WDT settings:

The first mechanism is the Configuration Change Protection mechanism, employing a timed write procedure for changing the WDT control registers.

The second mechanism locks the configuration by writing a '1' to the LOCK bit in the STATUS register (WDT.STATUS). When this bit is '1', the Control A register (WDT.CTRLA) cannot be changed. Consequently, the WDT cannot be disabled from software.

LOCK in WDT.STATUS can only be written to '1'. It can only be cleared in Debug mode.

If the WDT configuration is loaded from fuses, LOCK is automatically set in WDT.STATUS.

18.3.4 Sleep Mode Operation

The WDT will continue to operate in any sleep mode where the source clock is active.

18.3.5 Debug Operation

When run-time debugging, this peripheral will continue normal operation. Halting the CPU in Debugging mode will halt the normal operation of the peripheral.

When halting the CPU in Debug mode, the WDT counter is reset.

When starting the CPU again and the WDT is operating in Window mode, the first closed window time-out period will be disabled, and a Normal mode time-out period is executed.

18.3.6 Synchronization

Due to asynchronicity between the main clock domain and the peripheral clock domain, the Control A register (WDT.CTRLA) is synchronized when written. The Synchronization Busy flag (SYNCBUSY) in the STATUS register (WDT.STATUS) indicates if there is an ongoing synchronization.

Writing to WDT.CTRLA while SYNCBUSY=1 is not allowed.

The following registers are synchronized when written:

- PERIOD bits in Control A register (WDT.CTRLA)
- Window Period bits (WINDOW) in WDT.CTRLA

The `WDR` instruction will need two to three cycles of the WDT clock in order to be synchronized. Issuing a new `WDR` instruction while a `WDR` instruction is being synchronized will be ignored.

18.3.7 Configuration Change Protection

This peripheral has registers that are under Configuration Change Protection (CCP). In order to write to these, a certain key must be written to the CPU.CCP register first, followed by a write access to the protected bits within four CPU instructions.

It is possible to try writing to these registers any time, but the values are not altered.

The following registers are under CCP:

Table 18-1. WDT - Registers Under Configuration Change Protection

Register	Key
WDT.CTRLA	IOREG
LOCK bit in WDT.STATUS	IOREG

List of bits/registers protected by CCP:

- Period bits in Control A register (CTRLA.PERIOD)
- Window Period bits in Control A register (CTRLA.WINDOW)
- LOCK bit in STATUS register (STATUS.LOCK)

18.4 Register Summary - WDT

Offset	Name	Bit Pos.								
0x00	CTRLA	7:0	WINDOW[3:0]				PERIOD[3:0]			
0x01	STATUS	7:0	LOCK							SYNCBUSY

18.5 Register Description

18.5.1 Control A

Name: CTRLA
Offset: 0x00
Reset: From FUSE.WDTCFG
Property: Configuration Change Protection

Bit	7	6	5	4	3	2	1	0
	WINDOW[3:0]				PERIOD[3:0]			
Access	R/W	R/W	R/W	R/W	R/W	R/W	R/W	R/W
Reset	x	x	x	x	x	x	x	x

Bits 7:4 – WINDOW[3:0] Window
Writing a non-zero value to these bits enables the Window mode, and selects the duration of the closed period accordingly.
The bits are optionally lock-protected:

- If LOCK bit in WDT.STATUS is '1', all bits are change-protected (Access = R)
- If LOCK bit in WDT.STATUS is '0', all bits can be changed (Access = R/W)

Value	Name	Description
0x0	OFF	-
0x1	8CLK	0.008s
0x2	16CLK	0.016s
0x3	32CLK	0.032s
0x4	64CLK	0.064s
0x5	128CLK	0.128s
0x6	256CLK	0.256s
0x7	512CLK	0.512s
0x8	1KCLK	1.024s
0x9	2KCLK	2.048s
0xA	4KCLK	4.096s
0xB	8KCLK	8.192s
other	-	Reserved

Bits 3:0 – PERIOD[3:0] Period
Writing a non-zero value to this bit enables the WDT, and selects the time-out period in Normal mode accordingly. In Window mode, these bits select the duration of the open window.
The bits are optionally lock-protected:

- If LOCK in WDT.STATUS is '1', all bits are change-protected (Access = R)
- If LOCK in WDT.STATUS is '0', all bits can be changed (Access = R/W)

Value	Name	Description
0x0	OFF	-
0x1	8CLK	0.008s
0x2	16CLK	0.016s
0x3	32CLK	0.032s
0x4	64CLK	0.064s
0x5	128CLK	0.128s
0x6	256CLK	0.256s
0x7	512CLK	0.512s
0x8	1KCLK	1.0s
0x9	2KCLK	2.0s
0xA	4KCLK	4.1s
0xB	8KCLK	8.2s
other	-	Reserved

18.5.2 Status

Name: STATUS
Offset: 0x01
Reset: 0x00
Property: Configuration Change Protection

Bit	7	6	5	4	3	2	1	0
	LOCK							SYNCBUSY
Access	R/W							R
Reset	0							0

Bit 7 – LOCK Lock
Writing this bit to '1' write-protects the WDT.CTRLA register.
It is only possible to write this bit to '1'. This bit can be cleared in Debug mode only.
If the PERIOD bits in WDT.CTRLA are different from zero after boot code, the lock will automatically be set.
This bit is under CCP.

Bit 0 – SYNCBUSY Synchronization Busy
This bit is set after writing to the WDT.CTRLA register while the data is being synchronized from the system clock domain to the WDT clock domain.
This bit is cleared by the system after the synchronization is finished.
This bit is not under CCP.

19. TCA - 16-bit Timer/Counter Type A

19.1 Features

- 16-Bit Timer/Counter
- Three Compare Channels
- Double-Buffered Timer Period Setting
- Double-Buffered Compare Channels
- Waveform Generation:
  - Frequency generation
  - Single-slope PWM (Pulse-Width Modulation)
  - Dual-slope PWM
- Count on Event
- Timer Overflow Interrupts/Events
- One Compare Match per Compare Channel
- Two 8-Bit Timer/Counters in Split Mode

19.2 Overview

The flexible 16-bit PWM Timer/Counter type A (TCA) provides accurate program execution timing, frequency and waveform generation, and command execution.

A TCA consists of a base counter and a set of compare channels. The base counter can be used to count clock cycles or events, or let events control how it counts clock cycles. It has direction control and period setting that can be used for timing. The compare channels can be used together with the base counter to do compare match control, frequency generation, and pulse-width waveform modulation.

Depending on the mode of operation, the counter is cleared, reloaded, incremented, or decremented at each timer/counter clock or event input.

A timer/counter can be clocked and timed from the peripheral clock, with optional prescaling, or from the Event System. The Event System can also be used for direction control or to synchronize operations.

By default, the TCA is a 16-bit timer/counter. The timer/counter has a Split mode feature that splits it into two 8-bit timer/counters with three compare channels each.

A block diagram of the 16-bit timer/counter with closely related peripheral modules (in grey) is shown in the figure below.

Figure 19-1. 16-bit Timer/Counter and Closely Related Peripherals

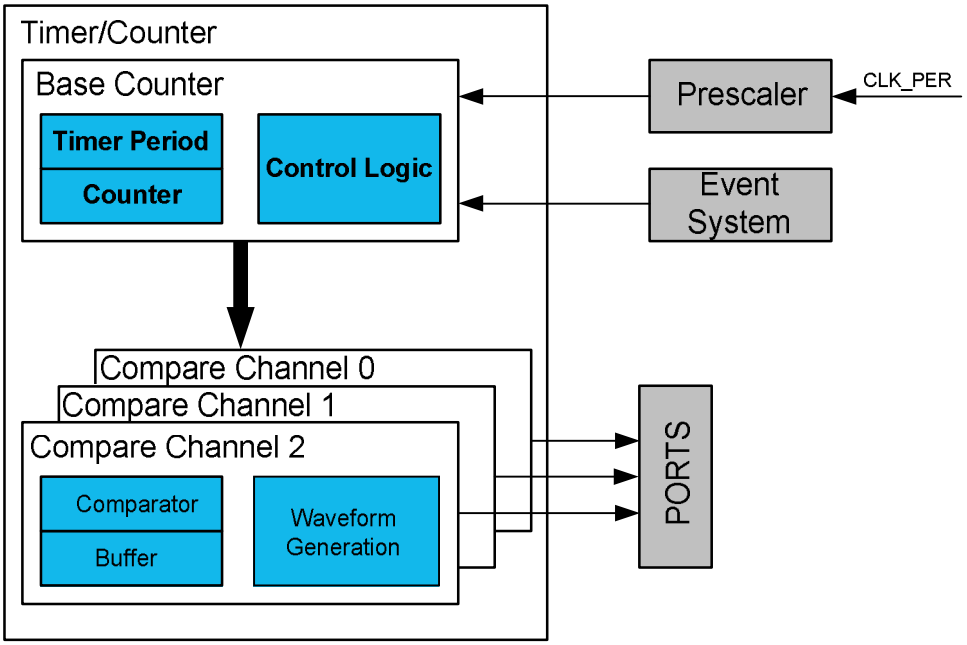

19.2.1 Block Diagram

The figure below shows a detailed block diagram of the timer/counter.

Figure 19-2. Timer/Counter Block Diagram

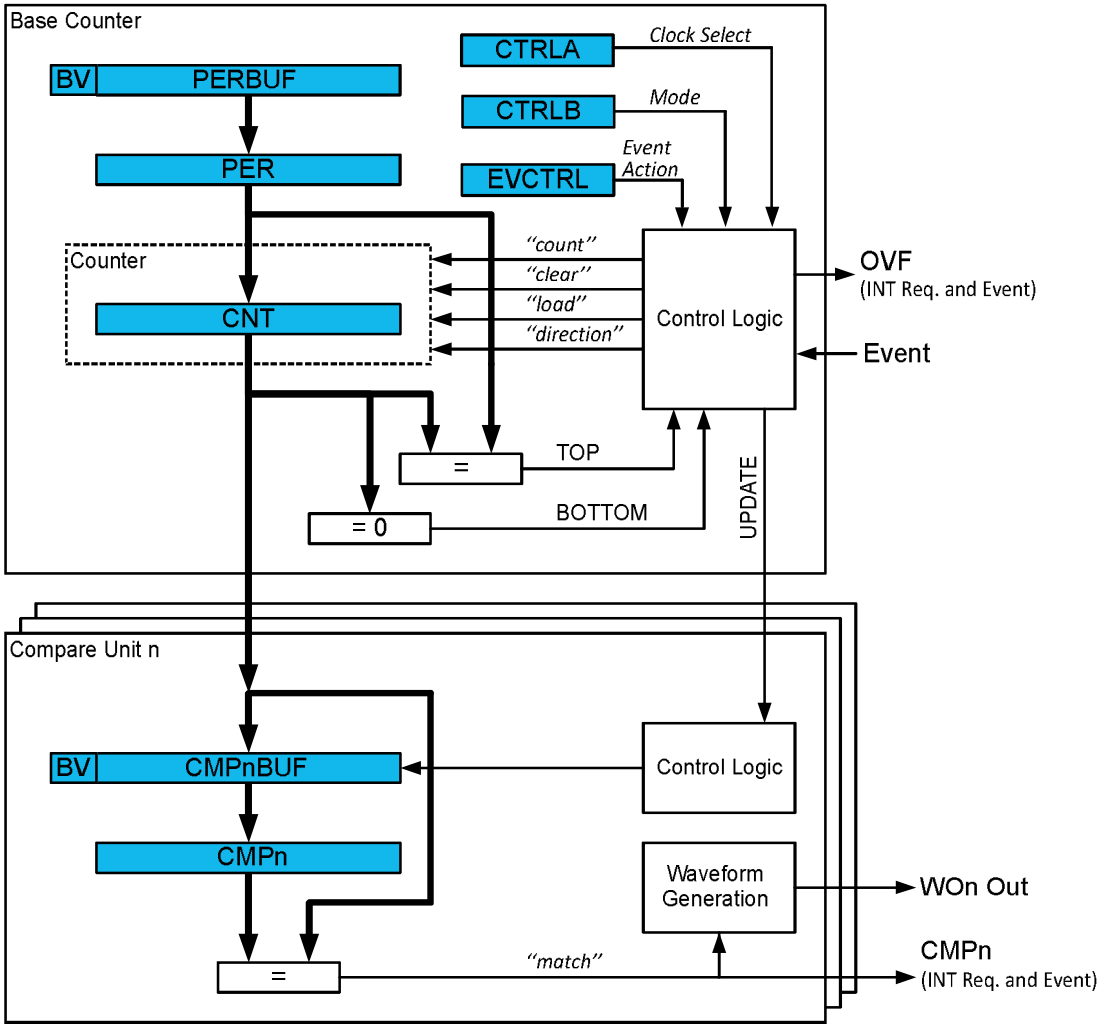

The Counter register (TCAn.CNT), Period and Compare registers (TCAn.PER and TCAn.CMPm) and their corresponding buffer registers (TCAn.PERBUF and TCAn.CMPBUFm) are 16-bit registers. All buffer registers have a Buffer Valid (BV) flag that indicates when the buffer contains a new value.

During normal operation, the counter value is continuously compared to zero and the period (PER) value to determine whether the counter has reached TOP or BOTTOM.

The counter value is also compared to the TCAn.CMPm registers. These comparisons can be used to generate interrupt requests. The Waveform Generator modes use these comparisons to set the waveform period or pulse width.

A prescaled peripheral clock and events from the Event System can be used to control the counter as shown in the figure below.

Figure 19-3. Timer/Counter Clock Logic

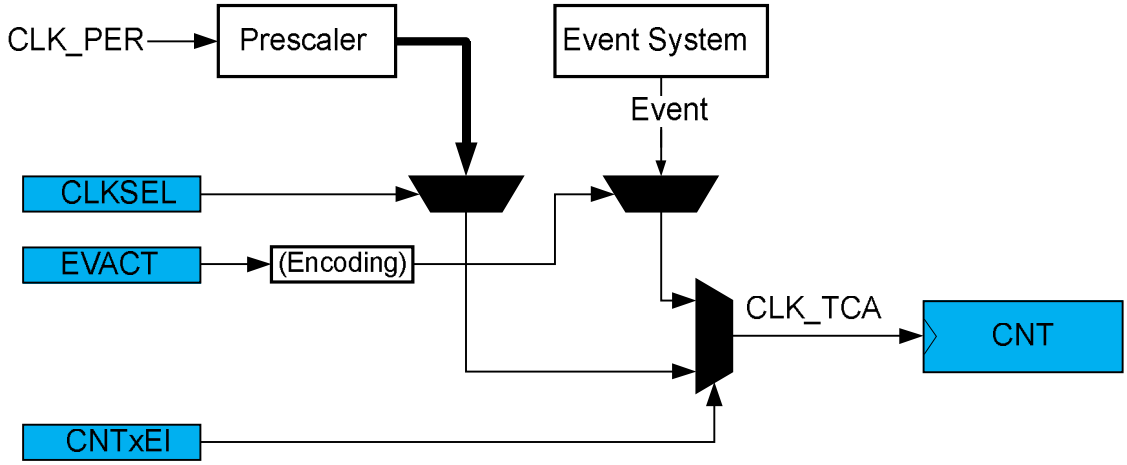

19.2.2 Signal Description

Signal	Description	Type
WOn	Digital output	Waveform output

19.3 Functional Description

19.3.1 Definitions

The following definitions are used throughout the documentation:

Table 19-1. Timer/Counter Definitions

Name	Description
BOTTOM	The counter reaches BOTTOM when it becomes 0x0000.
MAX	The counter reaches MAXimum when it becomes all ones.
TOP	The counter reaches TOP when it becomes equal to the highest value in the count sequence.
UPDATE	The update condition is met when the timer/counter reaches BOTTOM or TOP, depending on the Waveform Generator mode. Buffered registers with valid buffer values will be updated unless the Lock Update bit (LUPD) in TCAn.CTRLE has been set.
CNT	Counter register value.
CMP	Compare register value.

In general, the term timer is used when the timer/counter is counting periodic clock ticks. The term counter is used when the input signal has sporadic or irregular ticks. The latter can be the case when counting events.

19.3.2 Initialization

To start using the timer/counter in a basic mode, follow these steps:

1. Write a TOP value to the Period register (TCAn.PER).
2. Enable the peripheral by writing a '1' to the ENABLE bit in the Control A register (TCAn.CTRLA).
   The counter will start counting clock ticks according to the prescaler setting in the Clock Select bit field (CLKSEL) in TCAn.CTRLA.
3. Optional: By writing a '1' to the Enable Count on Event Input bit (CNTEI) in the Event Control register (TCAn.EVCTRL), events are counted instead of clock ticks.

4. The counter value can be read from the Counter bit field (CNT) in the Counter register (TCAn.CNT).

19.3.3 Operation

19.3.3.1 Normal Operation

In normal operation, the counter is counting clock ticks in the direction selected by the Direction bit (DIR) in the Control E register (TCAn.CTRLE), until it reaches TOP or BOTTOM. The clock ticks are given by the peripheral clock (CLK_PER), prescaled according to the Clock Select bit field (CLKSEL) in the Control A register (TCAn.CTRLA).

When TOP is reached while the counter is counting up, the counter will wrap to '0' at the next clock tick. When counting down, the counter is reloaded with the Period register value (TCAn.PER) when BOTTOM is reached.

Figure 19-4. Normal Operation

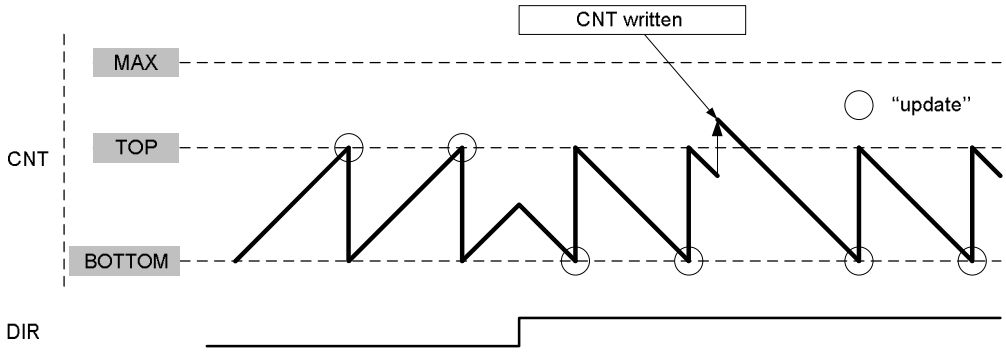

It is possible to change the counter value in the Counter register (TCAn.CNT) when the counter is running. The write access to TCAn.CNT has higher priority than count, clear or reload, and will be immediate. The direction of the counter can also be changed during normal operation by writing to DIR in TCAn.CTRLE.

19.3.3.2 Double Buffering

The Period register value (TCAn.PER) and the Compare n register values (TCAn.CMPn) are all double-buffered (TCAn.PERBUF and TCAn.CMPnBUF).

Each buffer register has a Buffer Valid flag (PERBV, CMPnBV) in the Control F register (TCAn.CTRLF), which indicates that the buffer register contains a valid (new) value that can be copied into the corresponding Period or Compare register. When the Period register and Compare n registers are used for a compare operation, the BV flag is set when data are written to the buffer register and cleared on an UPDATE condition. This is shown for a Compare register (CMPn) in the figure below.

Figure 19-5. Period and Compare Double Buffering

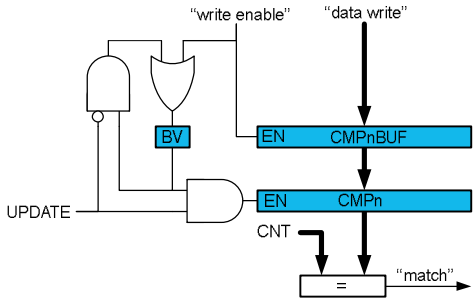

Both the TCAn.CMPn and TCAn.CMPnBUF registers are available as I/O registers. This allows initialization and bypassing of the buffer register and the double-buffering function.

19.3.3.3 Changing the Period

The Counter period is changed by writing a new TOP value to the Period register (TCAn.PER).

No Buffering: If double-buffering is not used, any period update is immediate.

Figure 19-6. Changing the Period Without Buffering

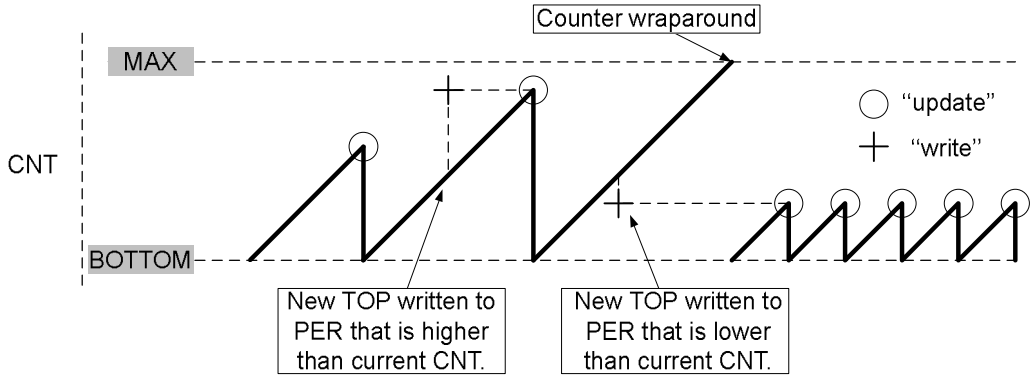

A counter wraparound can occur in any mode of operation when counting up without buffering, as the TCAn.CNT and TCAn.PER registers are continuously compared. If a new TOP value is written to TCAn.PER that is lower than the current TCAn.CNT, the counter will wrap first, before a compare match occurs.

Figure 19-7. Unbuffered Dual-Slope Operation

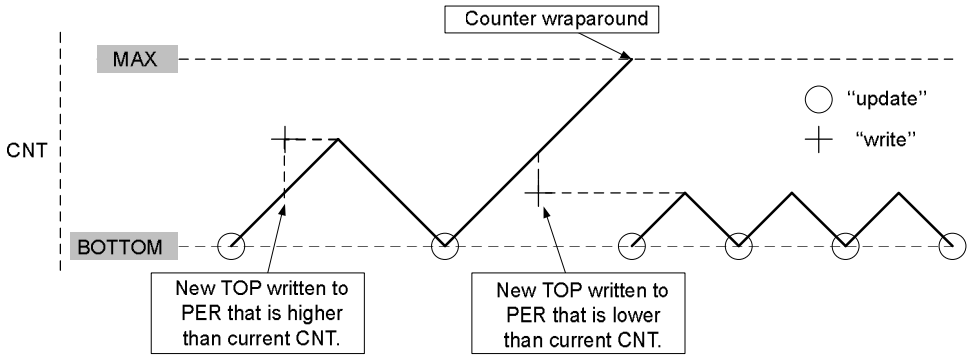

With Buffering: When double-buffering is used, the buffer can be written at any time and still maintain correct operation. The TCAn.PER is always updated on the UPDATE condition, as shown for dual-slope operation in the figure below. This prevents wraparound and the generation of odd waveforms.

Figure 19-8. Changing the Period Using Buffering

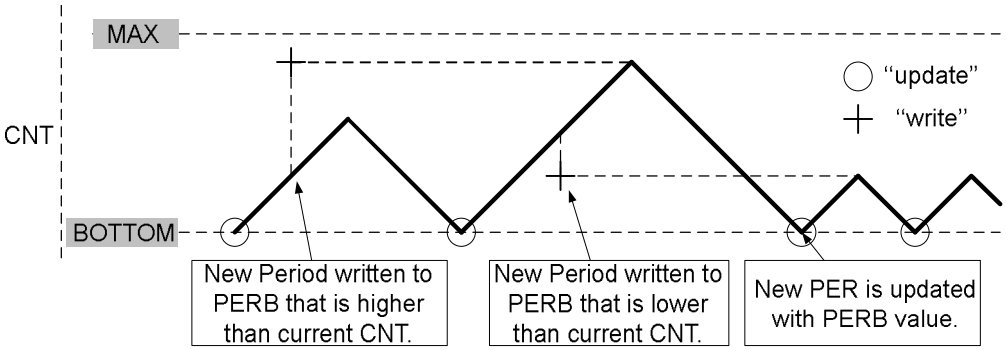

Note: Buffering is used in figures illustrating TCA operation if not otherwise specified.

19.3.3.4 Compare Channel

Each Compare Channel n continuously compares the counter value (TCAn.CNT) with the Compare n register (TCAn.CMPn). If TCAn.CNT equals TCAn.CMPn, the Comparator n signals a match. The match will set the Compare Channel's interrupt flag at the next timer clock cycle, and the optional interrupt is generated.

The Compare n Buffer register (TCAn.CMPnBUF) provides double-buffer capability equivalent to that for the period buffer. The double-buffering synchronizes the update of the TCAn.CMPn register with the buffer value to either the TOP or BOTTOM of the counting sequence, according to the UPDATE condition. The synchronization prevents the occurrence of odd-length, non-symmetrical pulses for glitch-free output.

19.3.3.4.1 Waveform Generation

The compare channels can be used for waveform generation on the corresponding port pins. The following requirements must be met to make the waveform visible on the connected port pin:

1. A Waveform Generation mode must be selected by writing the WGMODE bit field in TCAn.CTRLB.
2. The TCA is counting clock ticks, not events (CNTEI = `0` in TCAn.EVCTRL).
3. The compare channels used must be enabled (CMPnEN = `1` in TCAn.CTRLB). This will override the output value for the corresponding pin. An alternative pin can be selected by configuring the Port Multiplexer (PORTMUX). Refer to the *PORTMUX* chapter for details.
4. The direction for the associated port pin n must be configured as an output (PORTx.DIR[n] = `1`).
5. Optional: Enable the inverted waveform output for the associated port pin n (INVEN = `1` in PORTx.PINnCTRL).

19.3.3.4.2 Frequency (FRQ) Waveform Generation

For frequency generation, the period time (T) is controlled by the TCAn.CMP0 register instead of the Period register (TCAn.PER). The corresponding waveform generator output is toggled on each compare match between the TCAn.CNT and TCAn.CMPm registers.

Figure 19-9. Frequency Waveform Generation

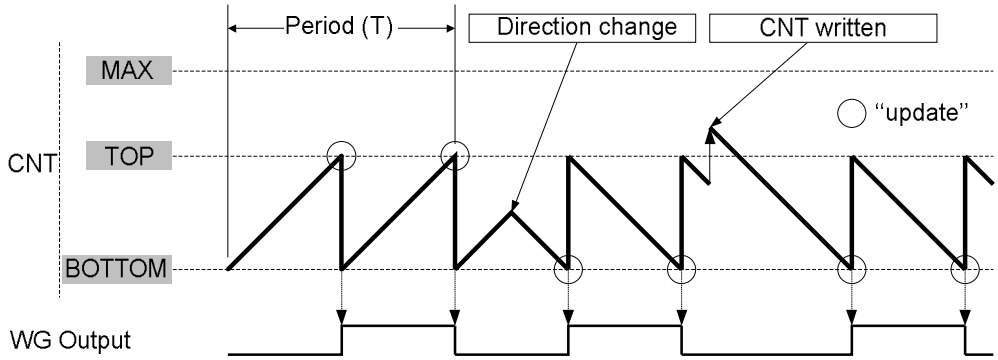

The waveform frequency (f_{FRQ}) is defined by the following equation:

$$f_{FRQ} = \frac{f_{CLK_PER}}{2N(CMPn+1)}$$

where N represents the prescaler divider used (CLKSEL in TCAn.CTRLA), and f_{CLK_PER} is the peripheral clock frequency.

The maximum frequency of the waveform generated is half of the peripheral clock frequency ($f_{CLK_PER}/2$) when TCAn.CMP0 is written to 0x0000 and no prescaling is used (N = `1`, CLKSEL = `0x0` in TCAn.CTRLA).

19.3.3.4.3 Single-Slope PWM Generation

For single-slope Pulse-Width Modulation (PWM) generation the period (T) is controlled by TCAn.PER, while the values of the TCAn.CMPm registers control the duty cycles of the generated waveforms. The figure below shows how the counter counts from BOTTOM to TOP and then restarts from BOTTOM. The waveform generator output is set at BOTTOM and cleared on the compare match between the TCAn.CNT and TCAn.CMPm registers.

CMPn = BOTTOM will produce a static low signal on WOn while CMPn > TOP will produce a static high signal on WOn.

Figure 19-10. Single-Slope Pulse-Width Modulation

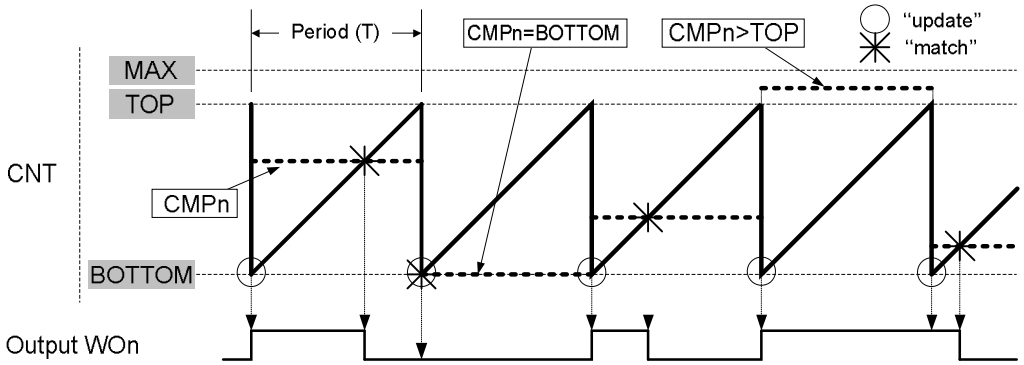

The TCAn.PER register defines the PWM resolution. The minimum resolution is 2 bits (TCA.PER = 0x0002), and the maximum resolution is 16 bits (TCA.PER = MAX-1).

The following equation calculates the exact resolution in bits for single-slope PWM (R_{PWM_SS}):

$$R_{PWM_SS} = \frac{\log(PER+2)}{\log(2)}$$

The single-slope PWM frequency (f_{PWM_SS}) depends on the period setting (TCA_PER), the system's peripheral clock frequency f_{CLK_PER} and the TCA prescaler (CLKSEL in TCAn.CTRLA). It is calculated by the following equation where *N* represents the prescaler divider used:

$$f_{PWM_SS} = \frac{f_{CLK_PER}}{N(PER+1)}$$

19.3.3.4.4 Dual-Slope PWM

For dual-slope PWM generation, the period (T) is controlled by TCAn.PER, while the values of TCAn.CMPm control the duty cycle of the WG output.

The figure below shows how, for dual-slope PWM, the counter counts repeatedly from BOTTOM to TOP and then from TOP to BOTTOM. The waveform generator output is set on BOTTOM, cleared on compare match when up-counting and set on compare match when down-counting.

CMPn = BOTTOM will produce a static low signal on WOn, while CMPn = TOP will produce a static high signal on WOn.

Figure 19-11. Dual-Slope Pulse-Width Modulation

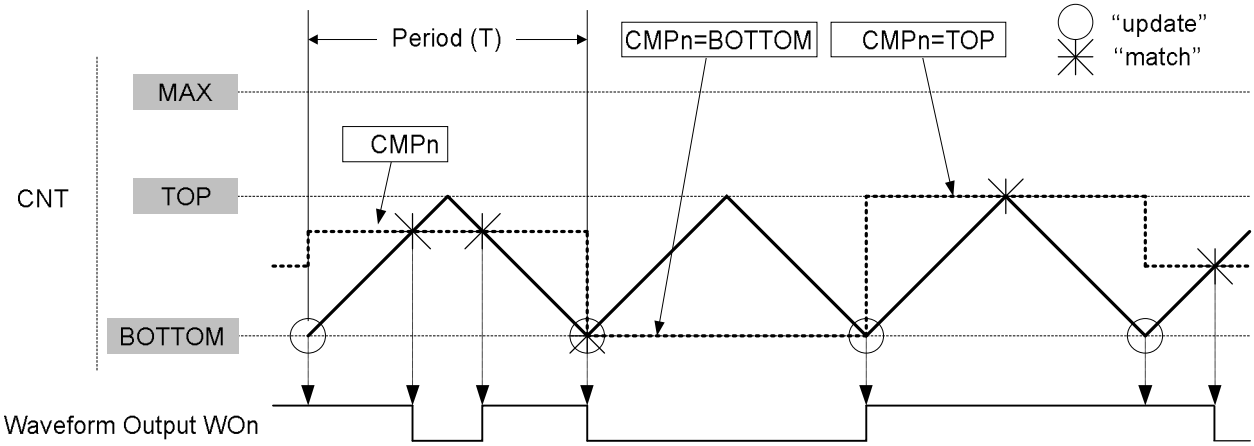

Using dual-slope PWM results in half the maximum operation frequency compared to single-slope PWM operation, due to twice the number of timer increments per period.

The period register (TCAn.PER) defines the PWM resolution. The minimum resolution is 2 bits (TCAn.PER = 0x0003), and the maximum resolution is 16 bits (TCAn.PER = MAX).

The following equation calculates the exact resolution in bits for dual-slope PWM (R_{PWM_DS}):

$$R_{PWM_DS} = \frac{\log(PER+1)}{\log(2)}$$

The PWM frequency depends on the period setting (TCAn.PER), the peripheral clock frequency (f_{CLK_PER}) and the prescaler divider used (CLKSEL in TCAn.CTRLA). It is calculated by the following equation:

$$f_{PWM_DS} = \frac{f_{CLK_PER}}{2N \cdot PER}$$

N represents the prescaler divider used.

19.3.3.4.5 Port Override for Waveform Generation

To make the waveform generation available on the port pins, the corresponding port pin direction must be set as output (PORTx.DIR[n] = 1). The TCA will override the port pin values when the compare channel is enabled (CMPnEN = 1 in TCAn.CTRLB) and a Waveform Generation mode is selected.

The figure below shows the port override for TCA. The timer/counter compare channel will override the port pin output value (OUT) on the corresponding port pin. Enabling inverted I/O on the port pin (INVEN = 1 in PORT.PINn) inverts the corresponding WG output.

Figure 19-12. Port Override for Timer/Counter Type A

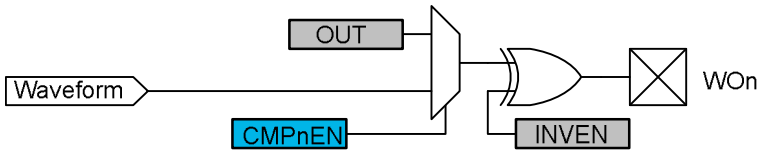

19.3.3.5 Timer/Counter Commands

A set of commands can be issued by software to immediately change the state of the peripheral. These commands give direct control of the UPDATE, RESTART and RESET signals. A command is issued by writing the respective value to the Command bit field (CMD) in the Control E register (TCAn.CTRLESET).

An UPDATE command has the same effect as when an UPDATE condition occurs, except that the UPDATE command is not affected by the state of the Lock Update bit (LUPD) in the Control E register (TCAn.CTRLE).

The software can force a restart of the current waveform period by issuing a RESTART command. In this case, the counter, direction, and all compare outputs are set to '0'.

A RESET command will set all timer/counter registers to their initial values. A RESET command can be issued only when the timer/counter is not running (ENABLE = 0 in TCAn.CTRLA).

19.3.3.6 Split Mode - Two 8-Bit Timer/Counters

Split Mode Overview

To double the number of timers and PWM channels in the TCA, a Split mode is provided. In this Split mode, the 16-bit timer/counter acts as two separate 8-bit timers, which each have three compare channels for PWM generation. The Split mode will only work with single-slope down-count. Event controlled operation is not supported in Split mode.

Activating Split mode results in changes to the functionality of some registers and register bits. The modifications are described in a separate register map (see 19.6 Register Summary - TCAn in Split Mode).

Split Mode Differences Compared to Normal Mode

- Count:
  - Down-count only
  - Low Byte Timer Counter Register (TCAn.LCNT) and High Byte Timer Counter Register (TCAn.HCNT) are independent
- Waveform Generation:
  - Single-slope PWM only (WGMODE = SINGLESLOPE in TCAn.CTRLB)
- Interrupt:
  - No change for Low Byte Timer Counter Register (TCAn.LCNT)
  - Underflow interrupt for High Byte Timer Counter Register (TCAn.HCNT)

  - No compare interrupt or flag for High Byte Compare Register n (TCAn.HCMPn)
- Event Actions: Not Compatible
- Buffer Registers and Buffer Valid Flags: Unused
- Register Access: Byte Access to All Registers

Block Diagram

Figure 19-13. Timer/Counter Block Diagram Split Mode

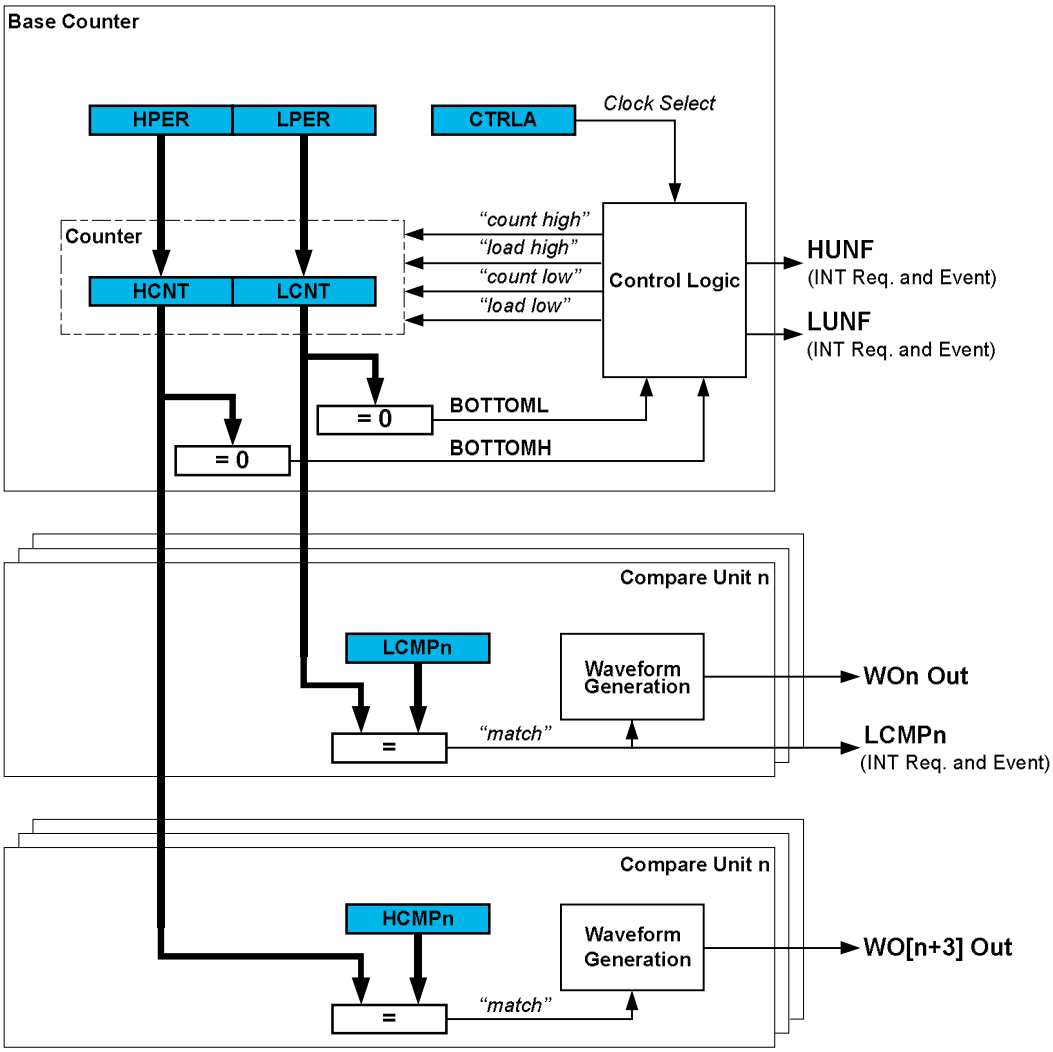

Split Mode Initialization

When shifting between Normal mode and Split mode, the functionality of some registers and bits changes, but their values do not. For this reason, disabling the peripheral (ENABLE = 0 in TCAn.CTRLA) and doing a hard Reset (CMD = RESET in TCAn.CTRLESET) is recommended when changing the mode to avoid unexpected behavior.

To start using the timer/counter in basic Split mode after a hard Reset, follow these steps:

1. Enable Split mode by writing a '1' to the Split mode enable bit in the Control D register (SPLITM in TCAn.CTRLD).
2. Write a TOP value to the Period registers (TCAn.PER).
3. Enable the peripheral by writing a '1' to the ENABLE bit in the Control A register (TCAn.CTRLA).
   The counter will start counting clock ticks according to the prescaler setting in the Clock Select bit field (CLKSEL) in TCAn.CTRLA.

4. The counter values can be read from the Counter bit field in the Counter registers (TCAn.CNT).

19.3.4 Events

The TCA can generate the events described in the table below. All event generators except TCAn_HUNF are shared between Normal mode and Split mode operation.

Table 19-2. Event Generators in TCA

Generator Name		Description	Event Type	Generating Clock Domain	Length of Event
Peripheral	Event				
TCAn	OVF_LUNF	Normal mode: Overflow Split mode: Low byte timer underflow	Pulse	CLK_PER	One CLK_PER period
	HUNF	Normal mode: Not available Split mode: High byte timer underflow	Pulse	CLK_PER	One CLK_PER period
	CMP0	Normal mode: Compare Channel 0 match Split mode: Low byte timer Compare Channel 0 match	Pulse	CLK_PER	One CLK_PER period
	CMP1	Normal mode: Compare Channel 1 match Split mode: Low byte timer Compare Channel 1 match	Pulse	CLK_PER	One CLK_PER period
	CMP2	Normal mode: Compare Channel 2 match Split mode: Low byte timer Compare Channel 2 match	Pulse	CLK_PER	One CLK_PER period

Note: The conditions for generating an event are identical to those that will raise the corresponding interrupt flag in the TCAn.INTFLAGS register for both Normal mode and Split mode.

The TCA has one event user for detecting and acting upon input events. The table below describes the event user and the associated functionality.

Table 19-3. Event User in TCA

User Name	Description	Input Detection	Async/Sync
TCAn	Count on positive event edge	Edge	Sync
	Count on any event edge	Edge	Sync
	Count while event signal is high	Level	Sync
	Event level controls count direction, up when low and down when high	Level	Sync

The specific actions described in the table above are selected by writing to the Event Action bits (EVACT) in the Event Control register (TCAn.EVCTRL). Input events are enabled by writing a '1' to the Enable Count on Event Input bit (CNTEI in TCAn.EVCTRL).

Event inputs are not used in Split mode.

Refer to the *Event System (EVSYS)* chapter for more details regarding event types and Event System configuration.

19.3.5 Interrupts

Table 19-4. Available Interrupt Vectors and Sources in Normal Mode

Name	Vector Description	Conditions
OVF	Overflow or underflow interrupt	The counter has reached TOP or BOTTOM.
CMP0	Compare Channel 0 interrupt	Match between the counter value and the Compare 0 register.
CMP1	Compare Channel 1 interrupt	Match between the counter value and the Compare 1 register.
CMP2	Compare Channel 2 interrupt	Match between the counter value and the Compare 2 register.

Table 19-5. Available Interrupt Vectors and Sources in Split Mode

Name	Vector Description	Conditions
LUNF	Low-byte Underflow interrupt	Low byte timer reaches BOTTOM.
HUNF	High-byte Underflow interrupt	High byte timer reaches BOTTOM.
LCMP0	Compare Channel 0 interrupt	Match between the counter value and the low byte of the Compare 0 register.
LCMP1	Compare Channel 1 interrupt	Match between the counter value and the low byte of the Compare 1 register.
LCMP2	Compare Channel 2 interrupt	Match between the counter value and the low byte of the Compare 2 register.

When an interrupt condition occurs, the corresponding interrupt flag is set in the Interrupt Flags register of the peripheral (*peripheral*.INTFLAGS).

An interrupt source is enabled or disabled by writing to the corresponding enable bit in the peripheral's Interrupt Control (*peripheral*.INTCTRL) register.

An interrupt request is generated when the corresponding interrupt source is enabled, and the interrupt flag is set. The interrupt request remains active until the interrupt flag is cleared. See the peripheral's INTFLAGS register for details on how to clear interrupt flags.

19.3.6 Sleep Mode Operation

The timer/counter will continue operation in Idle Sleep mode.

19.4 Register Summary - TCAn in Normal Mode

Offset	Name	Bit Pos.								
0x00	CTRLA	7:0					CLKSEL[2:0]			ENABLE
0x01	CTRLB	7:0		CMP2EN	CMP1EN	CMP0EN	ALUPD	WGMODE[2:0]		
0x02	CTRLC	7:0						CMP2OV	CMP1OV	CMP0OV
0x03	CTRLD	7:0								SPLITM
0x04	CTRLECLR	7:0					CMD[1:0]		LUPD	DIR
0x05	CTRLESET	7:0					CMD[1:0]		LUPD	DIR
0x06	CTRLFCLR	7:0					CMP2BV	CMP1BV	CMP0BV	PERBV
0x07	CTRLFSET	7:0					CMP2BV	CMP1BV	CMP0BV	PERBV
0x08	Reserved									
0x09	EVCTRL	7:0					EVACT[2:0]			CNTEI
0x0A	INTCTRL	7:0		CMP2	CMP1	CMP0				OVF
0x0B	INTFLAGS	7:0		CMP2	CMP1	CMP0				OVF
0x0C ... 0x0D	Reserved									
0x0E	DBGCTRL	7:0								DBGRUN
0x0F	TEMP	7:0	TEMP[7:0]							
0x10 ... 0x1F	Reserved									
0x20	CNT	7:0	CNT[7:0]							
		15:8	CNT[15:8]							
0x22 ... 0x25	Reserved									
0x26	PER	7:0	PER[7:0]							
		15:8	PER[15:8]							
0x28	CMP0	7:0	CMP[7:0]							
		15:8	CMP[15:8]							
0x2A	CMP1	7:0	CMP[7:0]							
		15:8	CMP[15:8]							
0x2C	CMP2	7:0	CMP[7:0]							
		15:8	CMP[15:8]							
0x2E ... 0x35	Reserved									
0x36	PERBUF	7:0	PERBUF[7:0]							
		15:8	PERBUF[15:8]							
0x37	PERBUFH	7:0	PERBUF[15:8]							
0x38	CMP0nBUF	7:0	CMPBUF[7:0]							
		15:8	CMPBUF[15:8]							
0x3A	CMP1nBUF	7:0	CMPBUF[7:0]							
		15:8	CMPBUF[15:8]							
0x3C	CMP2nBUF	7:0	CMPBUF[7:0]							
		15:8	CMPBUF[15:8]							

19.5 Register Description - Normal Mode

19.5.1 Control A

Name: CTRLA
Offset: 0x00
Reset: 0x00
Property: -

Bit	7	6	5	4	3	2	1	0
					CLKSEL[2:0]			ENABLE
Access					R/W	R/W	R/W	R/W
Reset					0	0	0	0

Bits 3:1 – CLKSEL[2:0] Clock Select
These bits select the clock frequency for the timer/counter.

Value	Name	Description
0x0	DIV1	$f_{TCA} = f_{CLK_PER}$
0x1	DIV2	$f_{TCA} = f_{CLK_PER}/2$
0x2	DIV4	$f_{TCA} = f_{CLK_PER}/4$
0x3	DIV8	$f_{TCA} = f_{CLK_PER}/8$
0x4	DIV16	$f_{TCA} = f_{CLK_PER}/16$
0x5	DIV64	$f_{TCA} = f_{CLK_PER}/64$
0x6	DIV256	$f_{TCA} = f_{CLK_PER}/256$
0x7	DIV1024	$f_{TCA} = f_{CLK_PER}/1024$

Bit 0 – ENABLE Enable

Value	Description
0	The peripheral is disabled
1	The peripheral is enabled

19.5.2 Control B - Normal Mode

Name: CTRLB
Offset: 0x01
Reset: 0x00
Property: -

Bit	7	6	5	4	3	2	1	0
		CMP2EN	CMP1EN	CMP0EN	ALUPD	WGMODE[2:0]		
Access		R/W	R/W	R/W	R/W	R/W	R/W	R/W
Reset		0	0	0	0	0	0	0

Bits 4, 5, 6 – CMPEN Compare n Enable
In the FRQ and PWM Waveform Generation modes the Compare n Enable bits (CMPnEN) will make the waveform output available on the pin corresponding to WOn, overriding the value in the corresponding PORT output register. The corresponding pin direction must be configured as an output in the PORT peripheral.

Value	Description
0	Waveform output WOn will not be available on the corresponding pin
1	Waveform output WOn will override the output value of the corresponding pin

Bit 3 – ALUPD Auto-Lock Update
The Auto-Lock Update bit controls the Lock Update (LUPD) bit in the TCAn.CTRLE register. When ALUPD is written to '1', LUPD will be set to '1' until the Buffer Valid (CMPnBV) bits of all enabled compare channels are '1'. This condition will clear LUPD.
It will remain cleared until the next UPDATE condition, where the buffer values will be transferred to the CMPn registers and LUPD will be set to '1' again. This makes sure that the CMPnBUF register values are not transferred to the CMPn registers until all enabled compare buffers are written.

Value	Description
0	LUPD in TCA.CTRLE is not altered by the system
1	LUPD in TCA.CTRLE is set and cleared automatically

Bits 2:0 – WGMODE[2:0] Waveform Generation Mode
These bits select the Waveform Generation mode and control the counting sequence of the counter, TOP value, UPDATE condition, Interrupt condition, and the type of waveform generated.
No waveform generation is performed in the Normal mode of operation. For all other modes, the waveform generator output will only be directed to the port pins if the corresponding CMPnEN bit has been set. The port pin direction must be set as output.

Table 19-6. Timer Waveform Generation Mode

Value	Group Configuration	Mode of Operation	TOP	UPDATE	OVF
0x0	NORMAL	Normal	PER	TOP(1)	TOP(1)
0x1	FRQ	Frequency	CMP0	TOP(1)	TOP(1)
0x2	-	Reserved	-	-	-
0x3	SINGLESLOPE	Single-slope PWM	PER	BOTTOM	BOTTOM
0x4	-	Reserved	-	-	-
0x5	DSTOP	Dual-slope PWM	PER	BOTTOM	TOP
0x6	DSBOTH	Dual-slope PWM	PER	BOTTOM	TOP and BOTTOM
0x7	DSBOTTOM	Dual-slope PWM	PER	BOTTOM	BOTTOM

Note:
1. When counting up.

19.5.3 Control C - Normal Mode

Name: CTRLC
Offset: 0x02
Reset: 0x00
Property: -

Bit	7	6	5	4	3	2	1	0
						CMP2OV	CMP1OV	CMP0OV
Access						R/W	R/W	R/W
Reset						0	0	0

Bit 2 – CMP2OV Compare Output Value 2
See CMP0OV.

Bit 1 – CMP1OV Compare Output Value 1
See CMP0OV.

Bit 0 – CMP0OV Compare Output Value 0
The CMPnOV bits allow direct access to the waveform generator's output compare value when the timer/counter is not enabled. This is used to set or clear the WG output value when the timer/counter is not running.

19.5.4 Control D

Name: CTRLD
Offset: 0x03
Reset: 0x00
Property: -

Bit	7	6	5	4	3	2	1	0
								SPLITM
Access								R/W
Reset								0

Bit 0 – SPLITM Enable Split Mode
This bit sets the timer/counter in Split mode operation. It will then work as two 8-bit timer/counters. The register map will change compared to normal 16-bit mode.

19.5.5 Control Register E Clear - Normal Mode

Name: CTRLECLR
Offset: 0x04
Reset: 0x00
Property: -

This register can be used instead of a Read-Modify-Write (RMW) to clear individual bits by writing a '1' to its bit location.

Bit	7	6	5	4	3	2	1	0
					CMD[1:0]		LUPD	DIR
Access					R/W	R/W	R/W	R/W
Reset					0	0	0	0

Bits 3:2 – CMD[1:0] Command
These bits are used for software control of update, restart and Reset of the timer/counter. The command bits are always read as '0'.

Value	Name	Description
0x0	NONE	No command
0x1	UPDATE	Force update
0x2	RESTART	Force restart
0x3	RESET	Force hard Reset (ignored if the timer/counter is enabled)

Bit 1 – LUPD Lock Update
Lock update can be used to ensure that all buffers are valid before an update is performed.

Value	Description
0	The buffered registers are updated as soon as an UPDATE condition has occurred
1	No update of the buffered registers is performed, even though an UPDATE condition has occurred

Bit 0 – DIR Counter Direction
Normally this bit is controlled in hardware by the Waveform Generation mode or by event actions, but it can also be changed from software.

Value	Description
0	The counter is counting up (incrementing)
1	The counter is counting down (decrementing)

19.5.6 Control Register E Set - Normal Mode

Name: CTRLESET
Offset: 0x05
Reset: 0x00
Property: -

This register can be used instead of a Read-Modify-Write (RMW) to set individual bits by writing a '1' to its bit location.

Bit	7	6	5	4	3	2	1	0
					CMD[1:0]		LUPD	DIR
Access					R/W	R/W	R/W	R/W
Reset					0	0	0	0

Bits 3:2 – CMD[1:0] Command
These bits are used for software control of update, restart and Reset the timer/counter. The command bits are always read as '0'.

Value	Name	Description
0x0	NONE	No command
0x1	UPDATE	Force update
0x2	RESTART	Force restart
0x3	RESET	Force hard Reset (ignored if the timer/counter is enabled)

Bit 1 – LUPD Lock Update
Locking the update ensures that all buffers are valid before an update is performed.

Value	Description
0	The buffered registers are updated as soon as an UPDATE condition has occurred
1	No update of the buffered registers is performed, even though an UPDATE condition has occurred

Bit 0 – DIR Counter Direction
Normally this bit is controlled in hardware by the Waveform Generation mode or by event actions, but it can also be changed from software.

Value	Description
0	The counter is counting up (incrementing)
1	The counter is counting down (decrementing)

19.5.7 Control Register F Clear

Name: CTRLFCLR
Offset: 0x06
Reset: 0x00
Property: -

This register can be used instead of a Read-Modify-Write (RMW) to clear individual bits by writing a '1' to its bit location.

Bit	7	6	5	4	3	2	1	0
					CMP2BV	CMP1BV	CMP0BV	PERBV
Access					R/W	R/W	R/W	R/W
Reset					0	0	0	0

Bit 3 – CMP2BV Compare 2 Buffer Valid
See CMP0BV.

Bit 2 – CMP1BV Compare 1 Buffer Valid
See CMP0BV.

Bit 1 – CMP0BV Compare 0 Buffer Valid
The CMPnBV bits are set when a new value is written to the corresponding TCAn.CMPnBUF register. These bits are automatically cleared on an UPDATE condition.

Bit 0 – PERBV Period Buffer Valid
This bit is set when a new value is written to the TCAn.PERBUF register. This bit is automatically cleared on an UPDATE condition.

19.5.8 Control Register F Set

Name: CTRLFSET
Offset: 0x07
Reset: 0x00
Property: -

This register can be used instead of a Read-Modify-Write (RMW) to set individual bits by writing a '1' to its bit location.

Bit	7	6	5	4	3	2	1	0
					CMP2BV	CMP1BV	CMP0BV	PERBV
Access					R/W	R/W	R/W	R/W
Reset					0	0	0	0

Bit 3 – CMP2BV Compare 2 Buffer Valid
See CMP0BV.

Bit 2 – CMP1BV Compare 1 Buffer Valid
See CMP0BV.

Bit 1 – CMP0BV Compare 0 Buffer Valid
The CMPnBV bits are set when a new value is written to the corresponding TCAn.CMPnBUF register. These bits are automatically cleared on an UPDATE condition.

Bit 0 – PERBV Period Buffer Valid
This bit is set when a new value is written to the TCAn.PERBUF register. This bit is automatically cleared on an UPDATE condition.

19.5.9 Event Control

Name: EVCTRL
Offset: 0x09
Reset: 0x00
Property: -

Bit	7	6	5	4	3	2	1	0
					EVACT[2:0]			CNTEI
Access					R/W	R/W	R/W	R/W
Reset					0	0	0	0

Bits 3:1 – EVACT[2:0] Event Action
These bits define what action the counter will take upon certain event conditions.

Value	Name	Description
0x0	EVACT_POSEDGE	Count on positive event edge
0x1	EVACT_ANYEDGE	Count on any event edge
0x2	EVACT_HIGHLVL	Count prescaled clock cycles while the event signal is high
0x3	EVACT_UPDOWN	Count prescaled clock cycles. The event signal controls the count direction, up when low and down when high.
Other		Reserved

Bit 0 – CNTEI Enable Count on Event Input

Value	Description
0	Count on Event input is disabled
1	Count on Event input is enabled according to EVACT bit field

19.5.10 Interrupt Control Register - Normal Mode

Name: INTCTRL
Offset: 0x0A
Reset: 0x00
Property: -

Bit	7	6	5	4	3	2	1	0
		CMP2	CMP1	CMP0				OVF
Access		R/W	R/W	R/W				R/W
Reset		0	0	0				0

Bit 6 – CMP2 Compare Channel 2 Interrupt Enable
See CMP0.

Bit 5 – CMP1 Compare Channel 1 Interrupt Enable
See CMP0.

Bit 4 – CMP0 Compare Channel 0 Interrupt Enable
Writing the CMPn bit to '1' enables the interrupt from Compare Channel n.

Bit 0 – OVF Timer Overflow/Underflow Interrupt Enable
Writing the OVF bit to '1' enables the overflow/underflow interrupt.

19.5.11 Interrupt Flag Register - Normal Mode

Name: INTFLAGS
Offset: 0x0B
Reset: 0x00
Property: -

Bit	7	6	5	4	3	2	1	0
		CMP2	CMP1	CMP0				OVF
Access		R/W	R/W	R/W				R/W
Reset		0	0	0				0

Bit 6 – CMP2 Compare Channel 2 Interrupt Flag
See the CMP0 flag description.

Bit 5 – CMP1 Compare Channel 1 Interrupt Flag
See the CMP0 flag description.

Bit 4 – CMP0 Compare Channel 0 Interrupt Flag
The Compare Interrupt flag (CMPn) is set on a compare match on the corresponding compare channel.
For all modes of operation, the CMPn flag will be set when a compare match occurs between the Count register (CNT) and the corresponding Compare register (CMPn). The CMPn flag is not cleared automatically. It will be cleared only by writing a '1' to its bit location.

Bit 0 – OVF Overflow/Underflow Interrupt Flag
This flag is set either on a TOP (overflow) or BOTTOM (underflow) condition, depending on the WGMODE setting.
The OVF flag is not cleared automatically. It will be cleared only by writing a '1' to its bit location.

19.5.12 Debug Control Register

Name: DBGCTRL
Offset: 0x0E
Reset: 0x00
Property: -

Bit	7	6	5	4	3	2	1	0
								DBGRUN
Access								R/W
Reset								0

Bit 0 – DBGRUN Run in Debug

Value	Description
0	The peripheral is halted in Break Debug mode and ignores events
1	The peripheral will continue to run in Break Debug mode when the CPU is halted

19.5.13 Temporary Bits for 16-Bit Access

Name: TEMP
Offset: 0x0F
Reset: 0x00
Property: -

The Temporary register is used by the CPU for single-cycle, 16-bit access to the 16-bit registers of this peripheral. It can be read and written by software. Refer to 16-bit access in the AVR CPU chapter. There is one common Temporary register for all the 16-bit registers of this peripheral.

Bit	7	6	5	4	3	2	1	0
	TEMP[7:0]							
Access	R/W	R/W	R/W	R/W	R/W	R/W	R/W	R/W
Reset	0	0	0	0	0	0	0	0

Bits 7:0 – TEMP[7:0] Temporary Bits for 16-bit Access

19.5.14 Counter Register - Normal Mode

Name: CNT
Offset: 0x20
Reset: 0x00
Property: -

The TCAn.CNTL and TCAn.CNTH register pair represents the 16-bit value, TCAn.CNT. The low byte [7:0] (suffix L) is accessible at the original offset. The high byte [15:8] (suffix H) can be accessed at offset + 0x01.

CPU and UPDI write access has priority over internal updates of the register.

Bit	15	14	13	12	11	10	9	8
	CNT[15:8]							
Access	R/W	R/W	R/W	R/W	R/W	R/W	R/W	R/W
Reset	0	0	0	0	0	0	0	0

Bit	7	6	5	4	3	2	1	0
	CNT[7:0]							
Access	R/W	R/W	R/W	R/W	R/W	R/W	R/W	R/W
Reset	0	0	0	0	0	0	0	0

Bits 15:8 – CNT[15:8] Counter High Byte
These bits hold the MSB of the 16-bit Counter register.

Bits 7:0 – CNT[7:0] Counter Low Byte
These bits hold the LSB of the 16-bit Counter register.

19.5.15 Period Register - Normal Mode

Name: PER
Offset: 0x26
Reset: 0xFFFF
Property: -

TCAn.PER contains the 16-bit TOP value in the timer/counter in all modes of operation, except Frequency Waveform Generation (FRQ).

The TCAn.PERL and TCAn.PERH register pair represents the 16-bit value, TCAn.PER. The low byte [7:0] (suffix L) is accessible at the original offset. The high byte [15:8] (suffix H) can be accessed at offset + 0x01.

Bit	15	14	13	12	11	10	9	8
	PER[15:8]							
Access	R/W	R/W	R/W	R/W	R/W	R/W	R/W	R/W
Reset	1	1	1	1	1	1	1	1

Bit	7	6	5	4	3	2	1	0
	PER[7:0]							
Access	R/W	R/W	R/W	R/W	R/W	R/W	R/W	R/W
Reset	1	1	1	1	1	1	1	1

Bits 15:8 – PER[15:8] Periodic High Byte
These bits hold the MSB of the 16-bit Period register.

Bits 7:0 – PER[7:0] Periodic Low Byte
These bits hold the LSB of the 16-bit Period register.

19.5.16 Compare n Register - Normal Mode

Name: CMPn
Offset: 0x28 + n*0x02 [n=0..2]
Reset: 0x00
Property: -

This register is continuously compared to the counter value. Normally, the outputs from the comparators are used to generate waveforms.

TCAn.CMPn registers are updated with the buffer value from their corresponding TCAn.CMPnBUF register when an UPDATE condition occurs.

The TCAn.CMPnL and TCAn.CMPnH register pair represents the 16-bit value, TCAn.CMPn. The low byte [7:0] (suffix L) is accessible at the original offset. The high byte [15:8] (suffix H) can be accessed at offset + 0x01.

Bit	15	14	13	12	11	10	9	8
	CMP[15:8]							
Access	R/W	R/W	R/W	R/W	R/W	R/W	R/W	R/W
Reset	0	0	0	0	0	0	0	0

Bit	7	6	5	4	3	2	1	0
	CMP[7:0]							
Access	R/W	R/W	R/W	R/W	R/W	R/W	R/W	R/W
Reset	0	0	0	0	0	0	0	0

Bits 15:8 – CMP[15:8] Compare High Byte
These bits hold the MSB of the 16-bit Compare register.

Bits 7:0 – CMP[7:0] Compare Low Byte
These bits hold the LSB of the 16-bit Compare register.

19.5.17 Period Buffer Register

Name: PERBUF
Offset: 0x36
Reset: 0xFFFF
Property: -

This register serves as the buffer for the Period register (TCAn.PER). Writing to this register from the CPU or UPDI will set the Period Buffer Valid bit (PERBV) in the TCAn.CTRLF register.

The TCAn.PERBUFL and TCAn.PERBUFH register pair represents the 16-bit value, TCAn.PERBUF. The low byte [7:0] (suffix L) is accessible at the original offset. The high byte [15:8] (suffix H) can be accessed at offset + 0x01.

Bit	15	14	13	12	11	10	9	8
	PERBUF[15:8]							
Access	R/W	R/W	R/W	R/W	R/W	R/W	R/W	R/W
Reset	1	1	1	1	1	1	1	1

Bit	7	6	5	4	3	2	1	0
	PERBUF[7:0]							
Access	R/W	R/W	R/W	R/W	R/W	R/W	R/W	R/W
Reset	1	1	1	1	1	1	1	1

Bits 15:8 – PERBUF[15:8] Period Buffer High Byte
These bits hold the MSB of the 16-bit Period Buffer register.

Bits 7:0 – PERBUF[7:0] Period Buffer Low Byte
These bits hold the LSB of the 16-bit Period Buffer register.

19.5.18 Period Buffer Register High

Name: PERBUFH
Offset: 0x37
Reset: 0xFF
Property: -

Bit	7	6	5	4	3	2	1	0
	PERBUF[15:8]							
Access	R/W	R/W	R/W	R/W	R/W	R/W	R/W	R/W
Reset	1	1	1	1	1	1	1	1

Bits 7:0 – PERBUF[15:8] Period Buffer High Byte
These bits hold the MSB of the 16-bit Period Buffer register. Refer to TCAn.PERBUFL register description for details.

19.5.19 Compare n Buffer Register

Name: CMPnBUF
Offset: 0x38 + n*0x02 [n=0..2]
Reset: 0x00
Property: -

This register serves as the buffer for the associated Compare register (TCAn.CMPn). Writing to this register from the CPU or UPDI will set the Compare Buffer valid bit (CMPnBV) in the TCAn.CTRLF register.

The TCAn.CMPnBUFL and TCAn.CMPnBUFH register pair represents the 16-bit value, TCAn.CMPnBUF. The low byte [7:0] (suffix L) is accessible at the original offset. The high byte [15:8] (suffix H) can be accessed at offset + 0x01.

Bit	15	14	13	12	11	10	9	8
	CMPBUF[15:8]							
Access	R/W	R/W	R/W	R/W	R/W	R/W	R/W	R/W
Reset	0	0	0	0	0	0	0	0

Bit	7	6	5	4	3	2	1	0
	CMPBUF[7:0]							
Access	R/W	R/W	R/W	R/W	R/W	R/W	R/W	R/W
Reset	0	0	0	0	0	0	0	0

Bits 15:8 – CMPBUF[15:8] Compare High Byte
These bits hold the MSB of the 16-bit Compare Buffer register.

Bits 7:0 – CMPBUF[7:0] Compare Low Byte
These bits hold the LSB of the 16-bit Compare Buffer register.

19.6 Register Summary - TCAn in Split Mode

Offset	Name	Bit Pos.								
0x00	CTRLA	7:0					CLKSEL[2:0]			ENABLE
0x01	CTRLB	7:0		HCMP2EN	HCMP1EN	HCMP0EN		LCMP2EN	LCMP1EN	LCMP0EN
0x02	CTRLC	7:0		HCMP2OV	HCMP1OV	HCMP0OV		LCMP2OV	LCMP1OV	LCMP0OV
0x03	CTRLD	7:0								SPLITM
0x04	CTRLECLR	7:0					CMD[1:0]		CMDEN[1:0]	
0x05	CTRLESET	7:0					CMD[1:0]		CMDEN[1:0]	
0x06 ... 0x09	Reserved									
0x0A	INTCTRL	7:0		LCMP2	LCMP1	LCMP0			HUNF	LUNF
0x0B	INTFLAGS	7:0		LCMP2	LCMP1	LCMP0			HUNF	LUNF
0x0C ... 0x0D	Reserved									
0x0E	DBGCTRL	7:0								DBGRUN
0x0F ... 0x1F	Reserved									
0x20	LCNT	7:0	LCNT[7:0]							
0x21	HCNT	7:0	HCNT[7:0]							
0x22 ... 0x25	Reserved									
0x26	LPER	7:0	LPER[7:0]							
0x27	HPER	7:0	HPER[7:0]							
0x28	LCMP0	7:0	LCMP[7:0]							
0x29	HCMP0	7:0	HCMP[7:0]							
0x2A	LCMP1	7:0	LCMP[7:0]							
0x2B	HCMP1	7:0	HCMP[7:0]							
0x2C	LCMP2	7:0	LCMP[7:0]							
0x2D	HCMP2	7:0	HCMP[7:0]							

19.7 Register Description - Split Mode

19.7.1 Control A

Name: CTRLA
Offset: 0x00
Reset: 0x00
Property: -

Bit	7	6	5	4	3	2	1	0
					CLKSEL[2:0]			ENABLE
Access					R/W	R/W	R/W	R/W
Reset					0	0	0	0

Bits 3:1 – CLKSEL[2:0] Clock Select
These bits select the clock frequency for the timer/counter.

Value	Name	Description
0x0	DIV1	$f_{TCA} = f_{CLK_PER}$
0x1	DIV2	$f_{TCA} = f_{CLK_PER}/2$
0x2	DIV4	$f_{TCA} = f_{CLK_PER}/4$
0x3	DIV8	$f_{TCA} = f_{CLK_PER}/8$
0x4	DIV16	$f_{TCA} = f_{CLK_PER}/16$
0x5	DIV64	$f_{TCA} = f_{CLK_PER}/64$
0x6	DIV256	$f_{TCA} = f_{CLK_PER}/256$
0x7	DIV1024	$f_{TCA} = f_{CLK_PER}/1024$

Bit 0 – ENABLE Enable

Value	Description
0	The peripheral is disabled
1	The peripheral is enabled

19.7.2 Control B - Split Mode

Name: CTRLB
Offset: 0x01
Reset: 0x00
Property: -

Bit	7	6	5	4	3	2	1	0
		HCMP2EN	HCMP1EN	HCMP0EN		LCMP2EN	LCMP1EN	LCMP0EN
Access		R/W	R/W	R/W		R/W	R/W	R/W
Reset		0	0	0		0	0	0

Bit 6 – HCMP2EN High byte Compare 2 Enable
See HCMP0EN.

Bit 5 – HCMP1EN High byte Compare 1 Enable
See HCMP0EN.

Bit 4 – HCMP0EN High byte Compare 0 Enable
Setting the HCMPnEN bit in the FRQ or PWM Waveform Generation mode of operation will override the port output register for the corresponding WO[n+3] pin.

Bit 2 – LCMP2EN Low byte Compare 2 Enable
See LCMP0EN.

Bit 1 – LCMP1EN Low byte Compare 1 Enable
See LCMP0EN.

Bit 0 – LCMP0EN Low byte Compare 0 Enable
Setting the LCMPnEN bit in the FRQ or PWM Waveform Generation mode of operation will override the port output register for the corresponding WOn pin.

19.7.3 Control C - Split Mode

Name: CTRLC
Offset: 0x02
Reset: 0x00
Property: -

Bit	7	6	5	4	3	2	1	0
		HCMP2OV	HCMP1OV	HCMP0OV		LCMP2OV	LCMP1OV	LCMP0OV
Access		R/W	R/W	R/W		R/W	R/W	R/W
Reset		0	0	0		0	0	0

Bit 6 – HCMP2OV High byte Compare 2 Output Value
See HCMP0OV.

Bit 5 – HCMP1OV High byte Compare 1 Output Value
See HCMP0OV.

Bit 4 – HCMP0OV High byte Compare 0 Output Value
The HCMPnOV bit allows direct access to the output compare value of the waveform generator when the timer/counter is not enabled. This is used to set or clear the WO[n+3] output value when the timer/counter is not running.

Bit 2 – LCMP2OV Low byte Compare 2 Output Value
See LCMP0OV.

Bit 1 – LCMP1OV Low byte Compare 1 Output Value
See LCMP0OV.

Bit 0 – LCMP0OV Low byte Compare 0 Output Value
The LCMPnOV bit allows direct access to the output compare value of the waveform generator when the timer/counter is not enabled. This is used to set or clear the WOn output value when the timer/counter is not running.

19.7.4 Control D

Name: CTRLD
Offset: 0x03
Reset: 0x00
Property: -

Bit	7	6	5	4	3	2	1	0
								SPLITM
Access								R/W
Reset								0

Bit 0 – SPLITM Enable Split Mode
This bit sets the timer/counter in Split mode operation. It will then work as two 8-bit timer/counters. The register map will change compared to normal 16-bit mode.

19.7.5 Control Register E Clear - Split Mode

Name: CTRLECLR
Offset: 0x04
Reset: 0x00
Property: -

This register can be used instead of a Read-Modify-Write (RMW) to clear individual bits by writing a '1' to its bit location.

Bit	7	6	5	4	3	2	1	0
					CMD[1:0]		CMDEN[1:0]	
Access					R/W	R/W	R/W	R/W
Reset					0	0	0	0

Bits 3:2 – CMD[1:0] Command
These bits are used for software control of update, restart and Reset of the timer/counter. The command bits are always read as '0'.

Value	Name	Description
0x0	NONE	No command
0x1	-	Reserved
0x2	RESTART	Force restart
0x3	RESET	Force hard Reset (ignored if the timer/counter is enabled)

Bits 1:0 – CMDEN[1:0] Command Enable
These bits configure what timer/counters the command given by the CMD-bits will be applied to.

Value	Name	Description
0x0	NONE	None
0x1	-	Reserved
0x2	-	Reserved
0x3	BOTH	Command (CMD) will be applied to both low byte and high byte timer/counter

19.7.6 Control Register E Set - Split Mode

Name: CTRLESET
Offset: 0x05
Reset: 0x00
Property: -

This register can be used instead of a Read-Modify-Write (RMW) to set individual bits by writing a '1' to its bit location.

Bit	7	6	5	4	3	2	1	0
					CMD[1:0]		CMDEN[1:0]	
Access					R/W	R/W	R/W	R/W
Reset					0	0	0	0

Bits 3:2 – CMD[1:0] Command
These bits are used for software control of update, restart and Reset of the timer/counter. The command bits are always read as '0'. The CMD bits must be used together with the Command Enable (CMDEN) bits. Using the RESET command requires that both low byte and high byte timer/counter are selected with CMDEN.

Value	Name	Description
0x0	NONE	No command
0x1	-	Reserved
0x2	RESTART	Force restart
0x3	RESET	Force hard Reset (ignored if the timer/counter is enabled)

Bits 1:0 – CMDEN[1:0] Command Enable
These bits configure what timer/counters the command given by the CMD-bits will be applied to.

Value	Name	Description
0x0	NONE	None
0x1	-	Reserved
0x2	-	Reserved
0x3	BOTH	Command (CMD) will be applied to both low byte and high byte timer/counter

19.7.7 Interrupt Control Register - Split Mode

Name: INTCTRL
Offset: 0x0A
Reset: 0x00
Property: -

Bit	7	6	5	4	3	2	1	0
		LCMP2	LCMP1	LCMP0			HUNF	LUNF
Access		R/W	R/W	R/W			R/W	R/W
Reset		0	0	0			0	0

Bit 6 – LCMP2 Low byte Compare Channel 0 Interrupt Enable
See LCMP0.

Bit 5 – LCMP1 Low byte Compare Channel 1 Interrupt Enable
See LCMP0.

Bit 4 – LCMP0 Low byte Compare Channel 0 Interrupt Enable
Writing the LCMPn bit to '1' enables the low byte Compare Channel n interrupt.

Bit 1 – HUNF High byte Underflow Interrupt Enable
Writing the HUNF bit to '1' enables the high byte underflow interrupt.

Bit 0 – LUNF Low byte Underflow Interrupt Enable
Writing the LUNF bit to '1' enables the low byte underflow interrupt.

19.7.8 Interrupt Flag Register - Split Mode

Name: INTFLAGS
Offset: 0x0B
Reset: 0x00
Property: -

Bit	7	6	5	4	3	2	1	0
		LCMP2	LCMP1	LCMP0			HUNF	LUNF
Access		R/W	R/W	R/W			R/W	R/W
Reset		0	0	0			0	0

Bit 6 – LCMP2 Low byte Compare Channel 0 Interrupt Flag
See LCMP0 flag description.

Bit 5 – LCMP1 Low byte Compare Channel 0 Interrupt Flag
See LCMP0 flag description.

Bit 4 – LCMP0 Low byte Compare Channel 0 Interrupt Flag
The Low byte Compare Interrupt flag (LCMPn) is set on a compare match on the corresponding compare channel in the low byte timer.
For all modes of operation, the LCMPn flag will be set when a compare match occurs between the Low Byte Timer Counter register (TCAn.LCNT) and the corresponding compare register (TCAn.LCMPn). The LCMPn flag will not be cleared automatically and has to be cleared by software. This is done by writing a '1' to its bit location.

Bit 1 – HUNF High byte Underflow Interrupt Flag
This flag is set on a high byte timer BOTTOM (underflow) condition. HUNF is not automatically cleared and needs to be cleared by software. This is done by writing a '1' to its bit location.

Bit 0 – LUNF Low byte Underflow Interrupt Flag
This flag is set on a low byte timer BOTTOM (underflow) condition. LUNF is not automatically cleared and needs to be cleared by software. This is done by writing a '1' to its bit location.

19.7.9 Debug Control Register

Name: DBGCTRL
Offset: 0x0E
Reset: 0x00
Property: -

Bit	7	6	5	4	3	2	1	0
								DBGRUN
Access								R/W
Reset								0

Bit 0 – DBGRUN Run in Debug

Value	Description
0	The peripheral is halted in Break Debug mode and ignores events
1	The peripheral will continue to run in Break Debug mode when the CPU is halted

19.7.10 Low Byte Timer Counter Register - Split Mode

Name: LCNT
Offset: 0x20
Reset: 0x00
Property: -

TCAn.LCNT contains the counter value for the low byte timer. CPU and UPDI write access has priority over count, clear or reload of the counter.

Bit	7	6	5	4	3	2	1	0
	LCNT[7:0]							
Access	R/W	R/W	R/W	R/W	R/W	R/W	R/W	R/W
Reset	0	0	0	0	0	0	0	0

Bits 7:0 – LCNT[7:0] Counter Value for Low Byte Timer
These bits define the counter value of the low byte timer.

19.7.11 High Byte Timer Counter Register - Split Mode

Name: HCNT
Offset: 0x21
Reset: 0x00
Property: -

TCAn.HCNT contains the counter value for the high byte timer. CPU and UPDI write access has priority over count, clear or reload of the counter.

Bit	7	6	5	4	3	2	1	0
	HCNT[7:0]							
Access	R/W	R/W	R/W	R/W	R/W	R/W	R/W	R/W
Reset	0	0	0	0	0	0	0	0

Bits 7:0 – HCNT[7:0] Counter Value for High Byte Timer
These bits define the counter value in high byte timer.

19.7.12 Low Byte Timer Period Register - Split Mode

Name: LPER
Offset: 0x26
Reset: 0x00
Property: -

The TCAn.LPER register contains the TOP value for the low byte timer.

Bit	7	6	5	4	3	2	1	0
	LPER[7:0]							
Access	R/W	R/W	R/W	R/W	R/W	R/W	R/W	R/W
Reset	1	1	1	1	1	1	1	1

Bits 7:0 – LPER[7:0] Period Value Low Byte Timer
These bits hold the TOP value for the low byte timer.

19.7.13 High Byte Period Register - Split Mode

Name: HPER
Offset: 0x27
Reset: 0x00
Property: -

The TCAn.HPER register contains the TOP value for the high byte timer.

Bit	7	6	5	4	3	2	1	0
	HPER[7:0]							
Access	R/W	R/W	R/W	R/W	R/W	R/W	R/W	R/W
Reset	1	1	1	1	1	1	1	1

Bits 7:0 – HPER[7:0] Period Value High Byte Timer
These bits hold the TOP value for the high byte timer.

19.7.14 Compare Register n For Low Byte Timer - Split Mode

Name: LCMP
Offset: 0x28 + n*0x02 [n=0..2]
Reset: 0x00
Property: -

The TCAn.LCMPn register represents the compare value of Compare Channel n for the low byte timer. This register is continuously compared to the counter value of the low byte timer, TCAn.LCNT. Normally, the outputs from the comparators are then used to generate waveforms.

Bit	7	6	5	4	3	2	1	0
	LCMP[7:0]							
Access	R/W	R/W	R/W	R/W	R/W	R/W	R/W	R/W
Reset	0	0	0	0	0	0	0	0

Bits 7:0 – LCMP[7:0] Compare Value of Channel n
These bits hold the compare value of channel n that is compared to TCAn.LCNT.

19.7.15 High Byte Compare Register n - Split Mode

Name: HCMP
Offset: 0x29 + n*0x02 [n=0..2]
Reset: 0x00
Property: -

The TCAn.HCMPn register represents the compare value of Compare Channel n for the high byte timer. This register is continuously compared to the counter value of the high byte timer, TCAn.HCNT. Normally, the outputs from the comparators are then used to generate waveforms.

Bit	7	6	5	4	3	2	1	0
	HCMP[7:0]							
Access	R/W	R/W	R/W	R/W	R/W	R/W	R/W	R/W
Reset	0	0	0	0	0	0	0	0

Bits 7:0 – HCMP[7:0] Compare Value of Channel n
These bits hold the compare value of channel n that is compared to TCAn.HCNT.

20. TCB - 16-bit Timer/Counter Type B

20.1 Features

- 16-bit Counter Operation Modes:
  - Periodic interrupt
  - Time-out check
  - Input capture
    - On event
    - Frequency measurement
    - Pulse-width measurement
    - Frequency and pulse-width measurement
  - Single-shot
  - 8-bit Pulse-Width Modulation (PWM)
- Noise Canceler on Event Input
- Synchronize Operation with TCAn

20.2 Overview

The capabilities of the 16-bit Timer/Counter type B (TCB) include frequency and waveform generation, and input capture on event with time and frequency measurement of digital signals. The TCB consists of a base counter and control logic that can be set in one of eight different modes, each mode providing unique functionality. The base counter is clocked by the peripheral clock with optional prescaling.

20.2.1 Block Diagram

Figure 20-1. Timer/Counter Type B Block

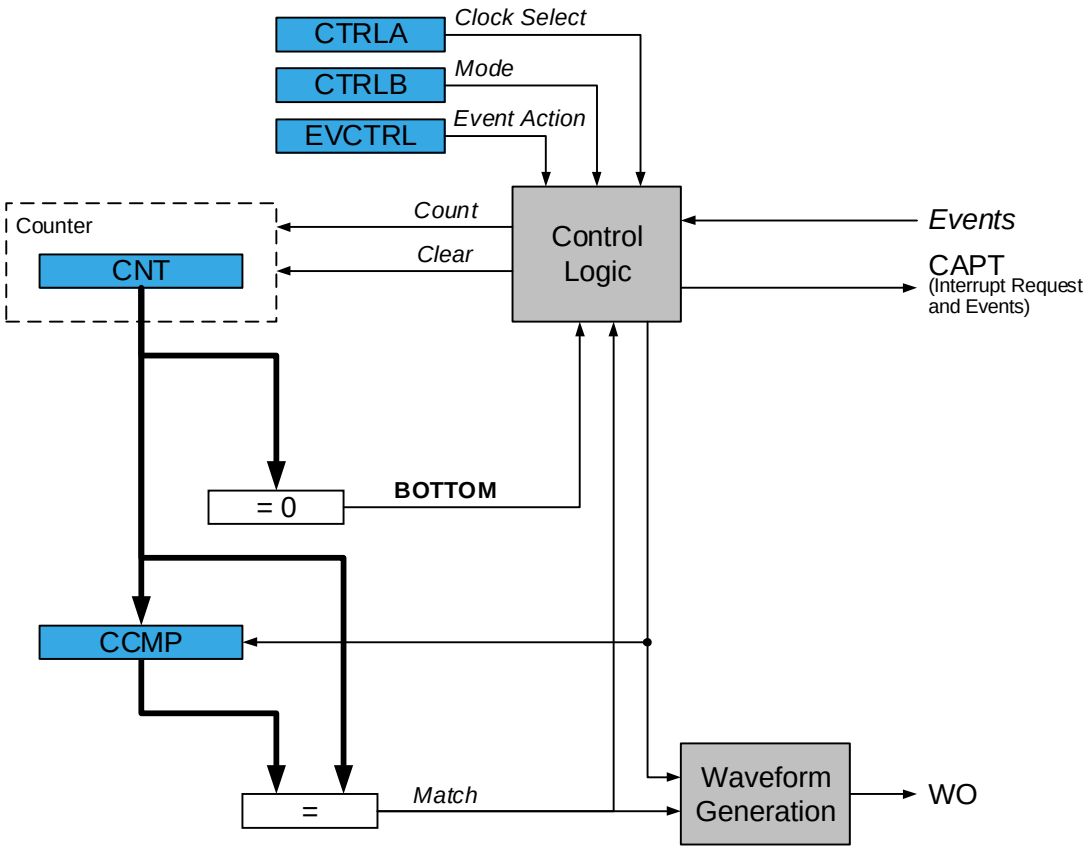

The timer/counter can be clocked from the Peripheral Clock (CLK_PER), or a 16-bit Timer/Counter type A (CLK_TCAn).

Figure 20-2. Timer/Counter Clock Logic

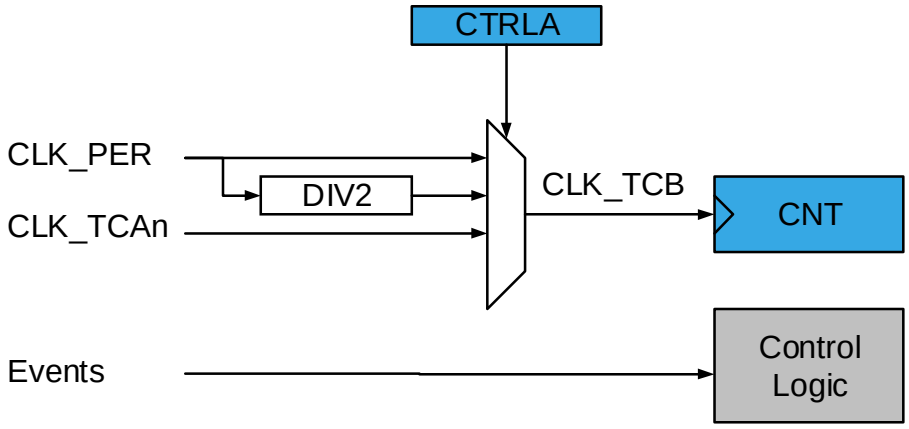

The Clock Select (CLKSEL) bit field in the Control A (TCBn.CTRLA) register selects one of the prescaler outputs directly as the clock (CLK_TCB) input.

Setting the timer/counter to use the clock from a TCAn allows the timer/counter to run in sync with that TCAn.

By using the EVSYS, any event source, such as an external clock signal on any I/O pin, may be used as a control logic input. When an event action controlled operation is used, the clock selection must be set to use an event channel as the counter input.

20.2.2 Signal Description

Signal	Description	Type
WO	Digital Asynchronous Output	Waveform Output

20.3 Functional Description

20.3.1 Definitions

The following definitions are used throughout the documentation:

Table 20-1. Timer/Counter Definitions

Name	Description
BOTTOM	The counter reaches BOTTOM when it becomes 0x0000
MAX	The counter reaches maximum when it becomes 0xFFFF
TOP	The counter reaches TOP when it becomes equal to the highest value in the count sequence
CNT	Counter register value
CCMP	Capture/Compare register value

Note: In general, the term ‘timer’ is used when the timer/counter is counting periodic clock ticks. The term ‘counter’ is used when the input signal has sporadic or irregular ticks.

20.3.2 Initialization

By default, the TCB is in Periodic Interrupt mode. Follow these steps to start using it:

1. Write a TOP value to the Compare/Capture (TCBn.CCMP) register.
2. Enable the counter by writing a ‘1’ to the ENABLE bit in the Control A (TCBn.CTRLA) register.
   The counter will start counting clock ticks according to the prescaler setting in the Clock Select (CLKSEL) bit field in the Control A (TCBn.CTRLA) register.
3. The counter value can be read from the Count (TCBn.CNT) register. The peripheral will generate a CAPT interrupt and event when the CNT value reaches TOP.
   3.1. If the Compare/Capture register is modified to a value lower than the current Count register, the peripheral will count to MAX and wrap around.

20.3.3 Operation

20.3.3.1 Modes

The timer can be configured to run in one of the eight different modes described in the sections below. The event pulse needs to be longer than one system clock cycle in order to ensure edge detection.

20.3.3.1.1 Periodic Interrupt Mode

In the Periodic Interrupt mode, the counter counts to the capture value and restarts from BOTTOM. A CAPT interrupt and event is generated when the counter is equal to TOP. If TOP is updated to a value lower than count upon reaching MAX the counter restarts from BOTTOM.

Figure 20-3. Periodic Interrupt Mode

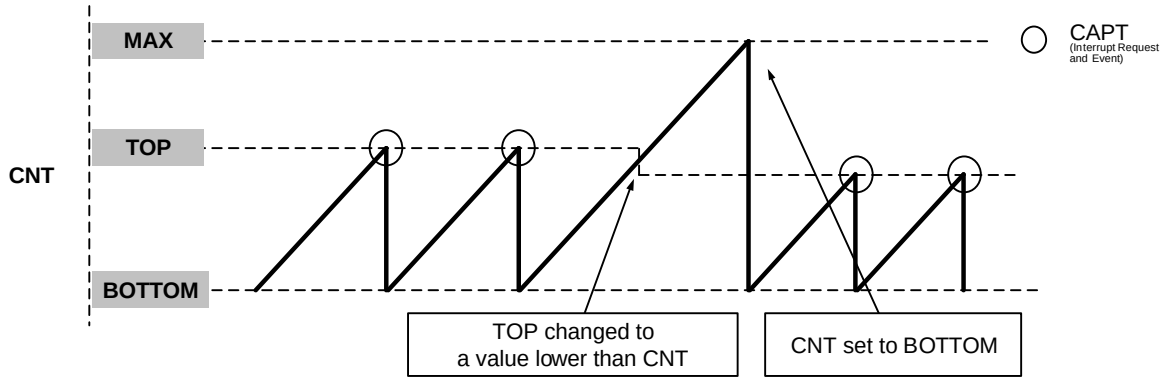

20.3.3.1.2 Time-Out Check Mode

In the Time-Out Check mode, the peripheral starts counting on the first signal edge and stops on the next signal edge detected on the event input channel. Start or Stop edge is determined by the Event Edge (EDGE) bit in the Event Control (TCBn.EVCTRL) register. If the Count (TCBn.CNT) register reaches TOP before the second edge, a CAPT interrupt and event will be generated. In Freeze state, after a Stop edge is detected, the counter will restart on a new Start edge. If TOP is updated to a value lower than the Count (TCBn.CNT) register upon reaching MAX the counter restarts from BOTTOM. Reading the Count (TCBn.CNT) register or Compare/Capture (TCBn.CCMP) register, or writing the Run (RUN) bit in the Status (TCBn.STATUS) register in Freeze state will have no effect.

Figure 20-4. Time-Out Check Mode

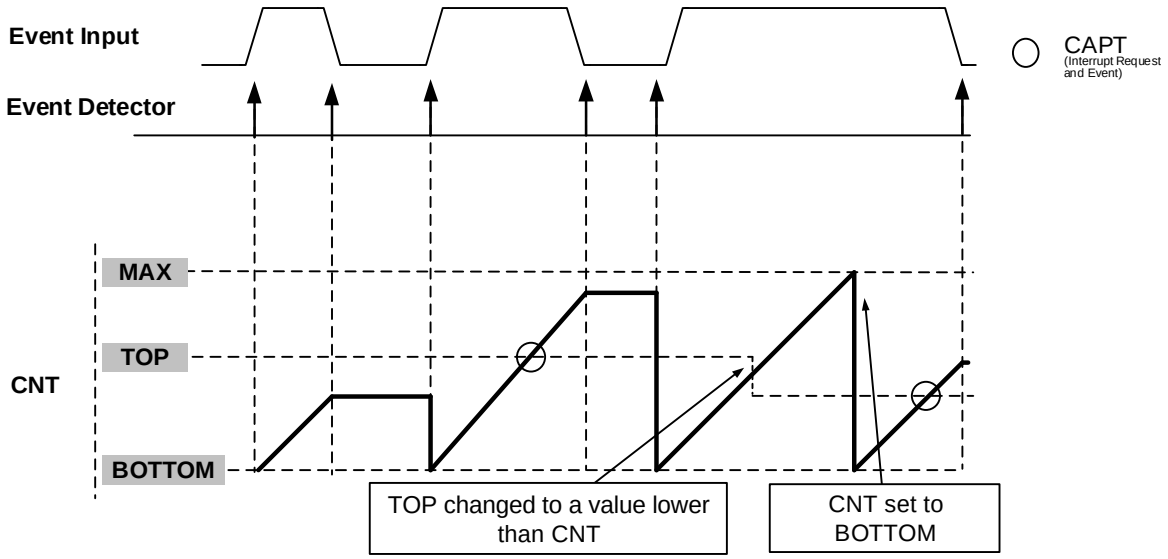

20.3.3.1.3 Input Capture on Event Mode

In the Input Capture on Event mode, the counter will count from BOTTOM to MAX continuously. When an event is detected the Count (TCBn.CNT) register value is transferred to the Compare/Capture (TCBn.CCMP) register and a CAPT interrupt and event is generated. The Event edge detector that can be configured to trigger a capture on either rising or falling edges.

The figure below shows the input capture unit configured to capture on the falling edge of the event input signal. The CAPT Interrupt flag is automatically cleared after the low byte of the Compare/Capture (TCBn.CCMP) register has been read.

Figure 20-5. Input Capture on Event

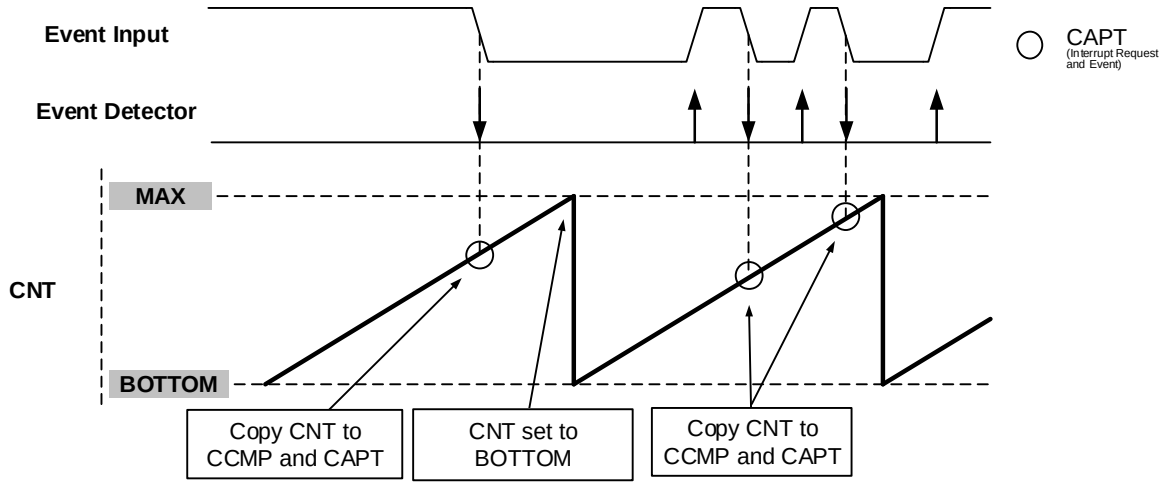

It is recommended to write zero to the TCBn.CNT register when entering this mode from any other mode.

20.3.3.1.4 Input Capture Frequency Measurement Mode

In the Input Capture Frequency Measurement mode, the TCB captures the counter value and restarts on either a positive or negative edge of the event input signal.

The CAPT Interrupt flag is automatically cleared after the low byte of the Compare/Capture (TCBn.CCMP) register has been read.

The figure below illustrates this mode when configured to act on rising edge.

Figure 20-6. Input Capture Frequency Measurement

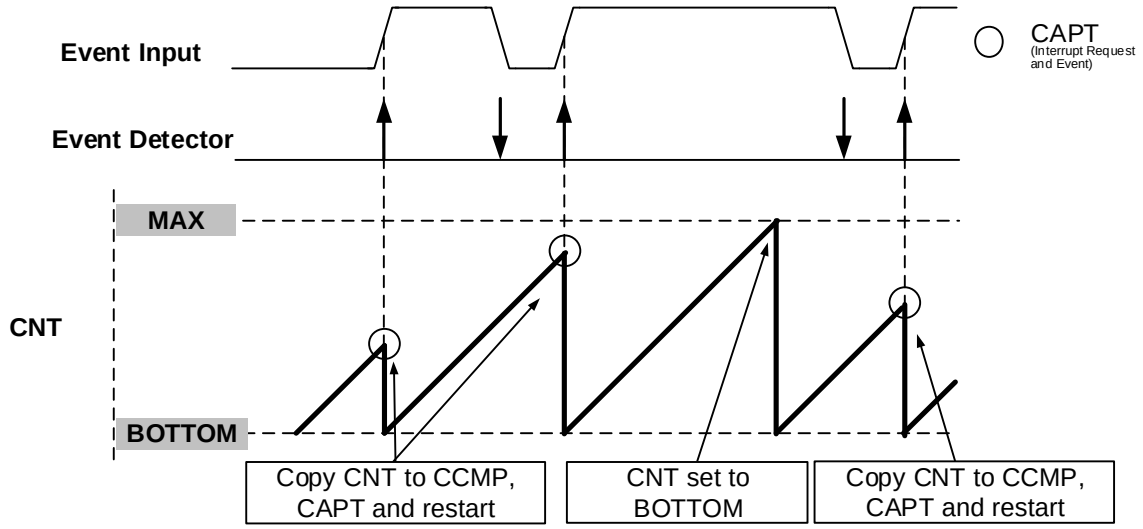

20.3.3.1.5 Input Capture Pulse-Width Measurement Mode

In the Input Capture Pulse-Width Measurement mode, the input capture pulse-width measurement will restart the counter on a positive edge, and capture on the next falling edge before an interrupt request is generated. The CAPT Interrupt flag is automatically cleared after the low byte of the Compare/Capture (TCBn.CCMP) register has been read. The timer will automatically switch between rising and falling edge detection, but a minimum edge separation of two clock cycles is required for correct behavior.

Figure 20-7. Input Capture Pulse-Width Measurement

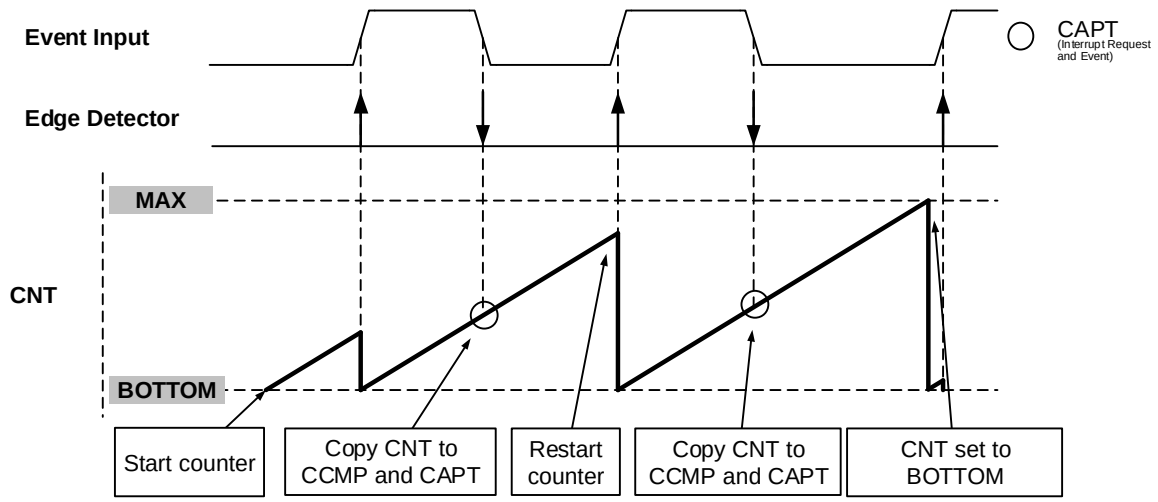

20.3.3.1.6 Input Capture Frequency and Pulse-Width Measurement Mode

In the Input Capture Frequency and Pulse-Width Measurement mode, the timer will start counting when a positive edge is detected on the event input signal. The count value is captured on the following falling edge. The counter stops when the second rising edge of the event input signal is detected. This will set the interrupt flag.

The CAPT Interrupt flag is automatically cleared after the low byte of the Compare/Capture (TCBn.CCMP) register has been read, and the timer/counter is ready for a new capture sequence. Therefore, the Count (TCBn.CNT) register must be read before the Compare/Capture (TCBn.CCMP) register, since it is reset to BOTTOM at the next positive edge of the event input signal.

Figure 20-8. Input Capture Frequency and Pulse-Width Measurement

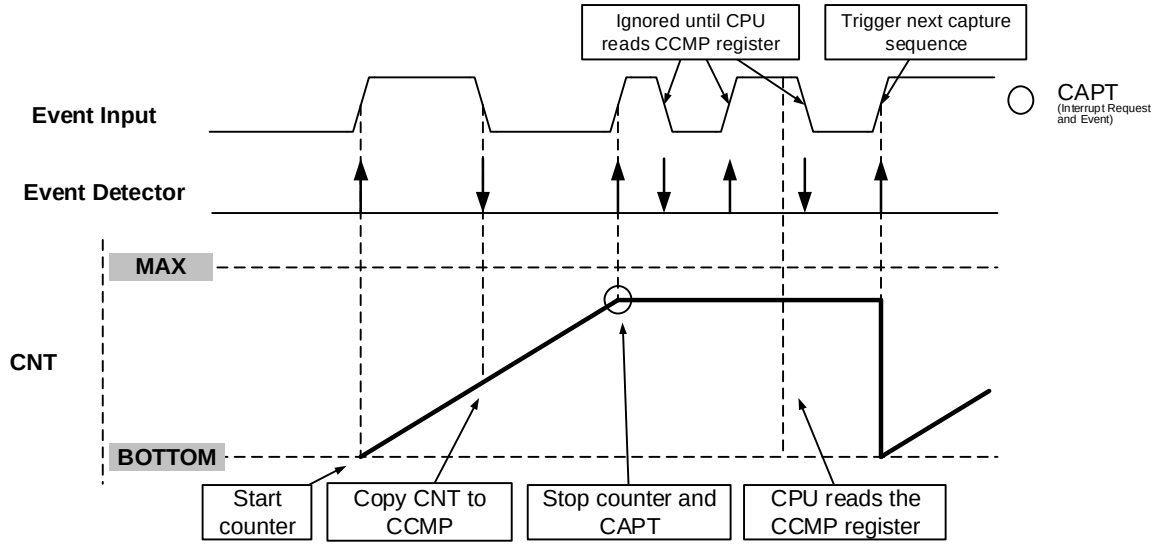

20.3.3.1.7 Single-Shot Mode

The Single-Shot mode can be used to generate a pulse with a duration defined by the Compare (TCBn.CCMP) register, every time a rising or falling edge is observed on a connected event channel.

When the counter is stopped, the output pin is driven to low. If an event is detected on the connected event channel, the timer will reset and start counting from BOTTOM to TOP while driving its output high. The RUN bit in the Status (TCBn.STATUS) register can be read to see if the counter is counting or not. When the Counter register reaches the CCMP register value, the counter will stop, and the output pin will go low for at least one prescaler cycle. A new event arriving during this time will be ignored. There is a two clock-cycle delay from when the event is received until the output is set high.

The counter will start counting as soon as the module is enabled, even without triggering an event. This is prevented by writing TOP to the Counter register. Similar behavior is seen if the Event Edge (EDGE) bit in the Event Control (TCBn.EVCTRL) register is '1' while the module is enabled. Writing TOP to the Counter register prevents this as well.

If the Event Asynchronous (ASYNC) bit in the Control B (TCBn.CTRLB) register is written to '1' the timer will react asynchronously to an incoming event. An edge on the event will immediately cause the output signal to be set. The counter will still start counting two clock cycles after the event is received.

Figure 20-9. Single-Shot Mode

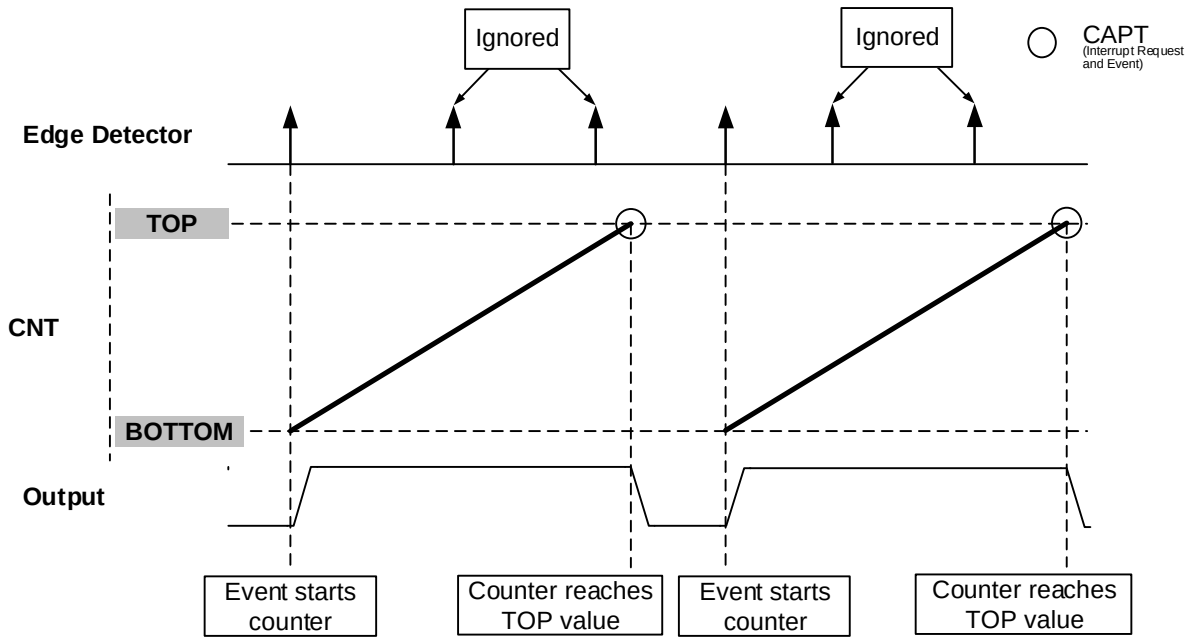

20.3.3.1.8 8-Bit PWM Mode

The TCB can be configured to run in 8-bit PWM mode, where each of the register pairs in the 16-bit Compare/Capture (TCBn.CCMPH and TCBn.CCMPL) register are used as individual Compare registers. The period (T) is controlled by CCMPH, while CCMPL controls the duty cycle of the waveform. The counter will continuously count from BOTTOM to CCMPL, and the output will be set at BOTTOM and cleared when the counter reaches CCMPH.

CCMPH is the number of cycles for which the output will be driven high. CCMPL+1 is the period of the output pulse.

Figure 20-10. 8-Bit PWM Mode

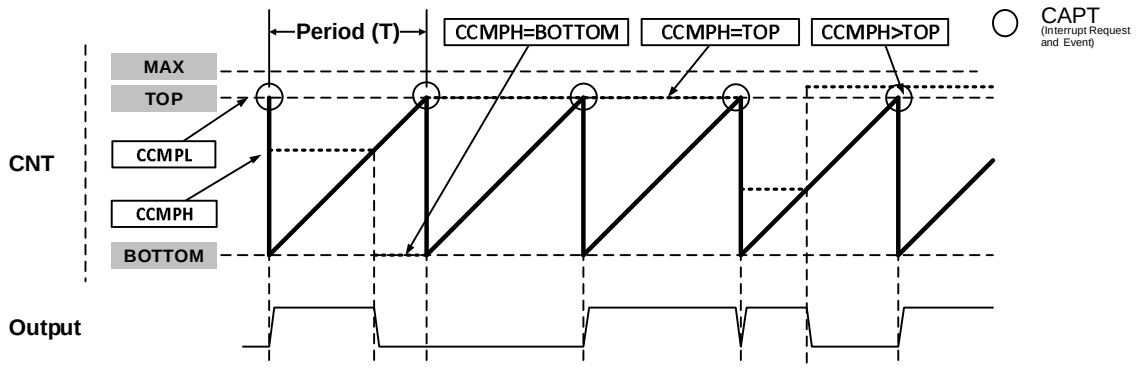

20.3.3.2 Output

Timer synchronization and output logic level are dependent on the selected Timer Mode (CNTMODE) bit field in Control B (TCBn.CTRLB) register. In Single-Shot mode the timer/counter can be configured so that the signal generation happens asynchronously to an incoming event (ASYNC = 1 in TCBn.CTRLB). The output signal is then set immediately at the incoming event instead of being synchronized to the TCB clock. Even though the output is set immediately, it will take two to three CLK_TCB cycles before the counter starts counting.

The different configurations and their impact on the output are listed in the table below.

Table 20-2. Output Configuration

CCMPEN	CNTMODE	ASYNC	Output
1	Single-Shot mode	0	The output is high when the counter starts and the output is low when the counter stops
		1	The output is high when the event arrives and the output is low when the counter stops
	8-bit PWM mode	Not applicable	8-bit PWM mode
	Other modes	Not applicable	The output initial level sets the CCMPINIT bit in the TCBn.CTRLB register
0	Not applicable	Not applicable	No output

It is not recommended to change modes while the peripheral is enabled as this can produce an unpredictable output. There is a possibility that an interrupt flag is set during the timer configuration. It is recommended to clear the Timer/Counter Interrupt Flags (TCBn.INTFLAGS) register after configuring the peripheral.

20.3.3.3 Noise Canceler

The Noise Canceler improves the noise immunity by using a simple digital filter scheme. When the Noise Filter (FILTER) bit in the Event Control (TCBn.EVCTRL) register is enabled, the peripheral monitors the event channel and keeps a record of the last four observed samples. If four consecutive samples are equal, the input is considered to be stable and the signal is fed to the edge detector.

When enabled the Noise Canceler introduces an additional delay of four system clock cycles between a change applied to the input and the update of the Input Compare register.

The Noise Canceler uses the system clock and is, therefore, not affected by the prescaler.

20.3.3.4 Synchronized with Timer/Counter Type A

The TCB can be configured to use the clock (CLK_TCA) of a Timer/Counter type A (TCAn) by writing to the Clock Select bit field (CLKSEL) in the Control A register (TCBn.CTRLA). In this setting, the TCB will count on the exact same clock source as selected in TCAn.

When the Synchronize Update (SYNCUPD) bit in the Control A (TCBn.CTRLA) register is written to '1', the TCB counter will restart when the TCAn counter restarts.

20.3.4 Events

The TCB can generate the events described in the following table:

Table 20-3. Event Generators in TCB

Generator Name		Description	Event Type	Generating Clock Domain	Length of Event
Peripheral	Event				
TCBn	CAPT	CAPT flag set	Pulse	CLK_PER	One CLK_PER period

The conditions for generating the CAPT event is identical to those that will raise the corresponding interrupt flag in the Timer/Counter Interrupt Flags (TCBn.INTFLAGS) register. Refer to the *Event System* section for more details regarding event users and Event System configuration.

The TCB can receive the events described in the following table:

Table 20-4. Event Users and Available Event Actions in TCB

User Name		Description	Input Detection	Async/Sync
Peripheral	Input			
TCBn	CAPT	Time-Out Check Count mode	Edge	Sync
		Input Capture on Event Count mode		
		Input Capture Frequency Measurement Count mode		
		Input Capture Pulse-Width Measurement Count mode		
		Input Capture Frequency and Pulse-Width Measurement Count mode		
		Single-Shot Count mode		Both

If the Capture Event Input Enable (CAPTEI) bit in the Event Control (TCBn.EVCTRL) register is written to '1', incoming events will result in an event action as defined by the Event Edge (EDGE) bit in Event Control (TCBn.EVCTRL) register and the Timer Mode (CNTMODE) bit field in Control B (TCBn.CTRLB) register. The event needs to last for at least one CLK_PER cycle to be recognized.

If the Asynchronous mode is enabled for Single-Shot mode, the event is edge-triggered and will capture changes on the event input shorter than one system clock cycle.

20.3.5 Interrupts

Table 20-5. Available Interrupt Vectors and Sources

Name	Vector Description	Conditions
CAPT	TCB interrupt	Depending on the operating mode. See the description of the CAPT bit in the TCBn.INTFLAG register.

When an interrupt condition occurs, the corresponding interrupt flag is set in the Interrupt Flags register of the peripheral (*peripheral*.INTFLAGS).

An interrupt source is enabled or disabled by writing to the corresponding enable bit in the peripheral's Interrupt Control (*peripheral*.INTCTRL) register.

An interrupt request is generated when the corresponding interrupt source is enabled, and the interrupt flag is set. The interrupt request remains active until the interrupt flag is cleared. See the peripheral's INTFLAGS register for details on how to clear interrupt flags.

20.3.6 Sleep Mode Operation

TCBn is by default disabled in Standby Sleep mode. It will be halted as soon as the Sleep mode is entered.

The module can stay fully operational in the Standby Sleep mode if the Run Standby (RUNSTDBY) bit in the TCBn.CTRLA register is written to '1'.

All operations are halted in Power-Down Sleep mode.

20.4 Register Summary - TCB

Offset	Name	Bit Pos.								
0x00	CTRLA	7:0		RUNSTDBY		SYNCUPD		CLKSEL[1:0]		ENABLE
0x01	CTRLB	7:0		ASYNC	CCMPINIT	CCMPEN		CNTMODE[2:0]		
0x02 ... 0x03	Reserved									
0x04	EVCTRL	7:0		FILTER		EDGE				CAPTEI
0x05	INTCTRL	7:0								CAPT
0x06	INTFLAGS	7:0								CAPT
0x07	STATUS	7:0								RUN
0x08	DBGCTRL	7:0								DBGRUN
0x09	TEMP	7:0	TEMP[7:0]							
0x0A	CNT	7:0	CNT[7:0]							
		15:8	CNT[15:8]							
0x0C	CCMP	7:0	CCMP[7:0]							
		15:8	CCMP[15:8]							

20.5 Register Description

20.5.1 Control A

Name: CTRLA
Offset: 0x00
Reset: 0x00
Property: -

Bit	7	6	5	4	3	2	1	0
		RUNSTDBY		SYNCUPD		CLKSEL[1:0]		ENABLE
Access		R/W		R/W		R/W	R/W	R/W
Reset		0		0		0	0	0

Bit 6 – RUNSTDBY Run in Standby
Writing a '1' to this bit will enable the peripheral to run in Standby Sleep mode. Not applicable when CLKSEL is set to 0x2 (CLK_TCA).

Bit 4 – SYNCUPD Synchronize Update
When this bit is written to '1', the TCB will restart whenever TCA0 is restarted or overflows. This can be used to synchronize capture with the PWM period.

Bits 2:1 – CLKSEL[1:0] Clock Select
Writing these bits selects the clock source for this peripheral.

Value	Name	Description
0x0	CLKDIV1	CLK_PER
0x1	CLKDIV2	CLK_PER / 2
0x2	CLKTCA	Use CLK_TCA from TCA0
0x3		Reserved

Bit 0 – ENABLE Enable
Writing this bit to '1' enables the Timer/Counter type B peripheral.

20.5.2 Control B

Name: CTRLB
Offset: 0x01
Reset: 0x00
Property: -

Bit	7	6	5	4	3	2	1	0
		ASYNC	CCMPINIT	CCMPEN		CNTMODE[2:0]		
Access		R/W	R/W	R/W		R/W	R/W	R/W
Reset		0	0	0		0	0	0

Bit 6 – ASYNC Asynchronous Enable
Writing this bit to '1' will allow asynchronous updates of the TCB output signal in Single-Shot mode.

Value	Description
0	The output will go HIGH when the counter starts after synchronization
1	The output will go HIGH when an event arrives

Bit 5 – CCMPINIT Compare/Capture Pin Initial Value
This bit is used to set the initial output value of the pin when a pin output is used.

Value	Description
0	Initial pin state is LOW
1	Initial pin state is HIGH

Bit 4 – CCMPEN Compare/Capture Output Enable
This bit is used to set the output value of the Compare/Capture Output.

Value	Description
0	Compare/Capture Output is '0'
1	Compare/Capture Output has a valid value

Bits 2:0 – CNTMODE[2:0] Timer Mode
Writing these bits selects the Timer mode.

Value	Name	Description
0x0	INT	Periodic Interrupt mode
0x1	TIMEOUT	Time-out Check mode
0x2	CAPT	Input Capture on Event mode
0x3	FRQ	Input Capture Frequency Measurement mode
0x4	PW	Input Capture Pulse-Width Measurement mode
0x5	FRQPW	Input Capture Frequency and Pulse-Width Measurement mode
0x6	SINGLE	Single-Shot mode
0x7	PWM8	8-Bit PWM mode

20.5.3 Event Control

Name: EVCTRL
Offset: 0x04
Reset: 0x00
Property: -

Bit	7	6	5	4	3	2	1	0
		FILTER		EDGE				CAPTEI
Access		R/W		R/W				R/W
Reset		0		0				0

Bit 6 – FILTER Input Capture Noise Cancellation Filter
Writing this bit to '1' enables the Input Capture Noise Cancellation unit.

Bit 4 – EDGE Event Edge
This bit is used to select the event edge. The effect of this bit is dependent on the selected Count Mode (CNTMODE) bit field in TCBn.CTRLB. "—" means that an event or edge has no effect in this mode.

Count Mode	EDGE	Positive Edge	Negative Edge
Periodic Interrupt mode	0	—	—
	1	—	—
Timeout Check mode	0	Start counter	Stop counter
	1	Stop counter	Start counter
Input Capture on Event mode	0	Input Capture, interrupt	—
	1	—	Input Capture, interrupt
Input Capture Frequency Measurement mode	0	Input Capture, clear and restart counter, interrupt	—
	1	—	Input Capture, clear and restart counter, interrupt
Input Capture Pulse-Width Measurement mode	0	Clear and restart counter	Input Capture, interrupt
	1	Input Capture, interrupt	Clear and restart counter
Input Capture Frequency and Pulse-Width Measurement mode	0	• On the 1st Positive: Clear and restart counter • On the following Negative: Input Capture • On the 2nd Positive: Stop counter, interrupt	
	1	• On the 1st Negative: Clear and restart counter • On the following Positive: Input Capture • On the 2nd Negative: Stop counter, interrupt	
Single-Shot mode	0	Start counter	—
	1	—	Start counter
8-Bit PWM mode	0	—	—
	1	—	—

Bit 0 – CAPTEI Capture Event Input Enable
Writing this bit to '1' enables the input capture event.

20.5.4 Interrupt Control

Name: INTCTRL
Offset: 0x05
Reset: 0x00
Property: -

Bit	7	6	5	4	3	2	1	0
								CAPT
Access								R/W
Reset								0

Bit 0 – CAPT Capture Interrupt Enable
Writing this bit to '1' enables interrupt on capture.

20.5.5 Interrupt Flags

Name: INTFLAGS
Offset: 0x06
Reset: 0x00
Property: -

Bit	7	6	5	4	3	2	1	0
								CAPT
Access								R/W
Reset								0

Bit 0 – CAPT Capture Interrupt Flag
This bit is set when a capture interrupt occurs. The interrupt conditions are dependent on the Counter Mode (CNTMODE) bit field in the Control B (TCBn.CTRLB) register.
This bit is cleared by writing a '1' to it or when the Capture register is read in Capture mode.

Table 20-6. Interrupt Sources Set Conditions by Counter Mode

Counter Mode	Interrupt Set Condition	TOP Value	CAPT
Periodic Interrupt mode	Set when the counter reaches TOP	CCMP	CNT == TOP
Timeout Check mode	Set when the counter reaches TOP		
Single-Shot mode	Set when the counter reaches TOP		
Input Capture Frequency Measurement mode	Set on edge when the Capture register is loaded and the counter restarts; the flag clears when the capture is read	--	On Event, copy CNT to CCMP, and restart counting (CNT == BOTTOM)
Input Capture on Event mode	Set when an event occurs and the Capture register is loaded; the flag clears when the capture is read		On Event, copy CNT to CCMP, and continue counting
Input Capture Pulse-Width Measurement mode	Set on edge when the Capture register is loaded; the previous edge initialized the count; the flag clears when the capture is read		
Input Capture Frequency and Pulse-Width Measurement mode	Set on the second edge (positive or negative) when the counter is stopped; the flag clears when the capture is read		
8-Bit PWM mode	Set when the counter reaches CCML	CCML	CNT == CCML

20.5.6 Status

Name: STATUS
Offset: 0x07
Reset: 0x00
Property: -

Bit	7	6	5	4	3	2	1	0
								RUN
Access								R
Reset								0

Bit 0 – RUN Run
When the counter is running, this bit is set to '1'. When the counter is stopped, this bit is cleared to '0'.
The bit is read-only and cannot be set by UPDI.

20.5.7 Debug Control

Name: DBGCTRL
Offset: 0x08
Reset: 0x00
Property: -

Bit	7	6	5	4	3	2	1	0
								DBGRUN
Access								R/W
Reset								0

Bit 0 – DBGRUN Debug Run

Value	Description
0	The peripheral is halted in Break Debug mode and ignores events
1	The peripheral will continue to run in Break Debug mode when the CPU is halted

20.5.8 Temporary Value

Name: TEMP
Offset: 0x09
Reset: 0x00
Property: -

The Temporary register is used by the CPU for single-cycle, 16-bit access to the 16-bit registers of this peripheral. It can be read and written by software. Refer to 16-bit access in the AVR CPU chapter. There is one common Temporary register for all the 16-bit registers of this peripheral.

Bit	7	6	5	4	3	2	1	0
	TEMP[7:0]							
Access	R/W	R/W	R/W	R/W	R/W	R/W	R/W	R/W
Reset	0	0	0	0	0	0	0	0

Bits 7:0 – TEMP[7:0] Temporary Value

20.5.9 Count

Name: CNT
Offset: 0x0A
Reset: 0x00
Property: -

The TCBn.CNTL and TCBn.CNTH register pair represents the 16-bit value TCBn.CNT. The low byte [7:0] (suffix L) is accessible at the original offset. The high byte [15:8] (suffix H) can be accessed at offset + 0x01.

CPU and UPDI write access has priority over internal updates of the register.

Bit	15	14	13	12	11	10	9	8
	CNT[15:8]							
Access	R/W	R/W	R/W	R/W	R/W	R/W	R/W	R/W
Reset	0	0	0	0	0	0	0	0

Bit	7	6	5	4	3	2	1	0
	CNT[7:0]							
Access	R/W	R/W	R/W	R/W	R/W	R/W	R/W	R/W
Reset	0	0	0	0	0	0	0	0

Bits 15:8 – CNT[15:8] Count Value High
These bits hold the MSB of the 16-bit Counter register.

Bits 7:0 – CNT[7:0] Count Value Low
These bits hold the LSB of the 16-bit Counter register.

20.5.10 Capture/Compare

Name: CCMP
Offset: 0x0C
Reset: 0x00
Property: -

The TCBn.CCMPL and TCBn.CCMPH register pair represents the 16-bit value TCBn.CCMP. The low byte [7:0] (suffix L) is accessible at the original offset. The high byte [15:8] (suffix H) can be accessed at offset + 0x01.

This register has different functions depending on the mode of operation:

- For Capture operation, these registers contain the captured value of the counter at the time the capture occurs
- In Periodic Interrupt/Time-Out and Single-Shot mode, this register acts as the TOP value
- In 8-bit PWM mode, TCBn.CCMPL and TCBn.CCMPH act as two independent registers

Bit	15	14	13	12	11	10	9	8
	CCMP[15:8]							
Access	R/W	R/W	R/W	R/W	R/W	R/W	R/W	R/W
Reset	0	0	0	0	0	0	0	0

Bit	7	6	5	4	3	2	1	0
	CCMP[7:0]							
Access	R/W	R/W	R/W	R/W	R/W	R/W	R/W	R/W
Reset	0	0	0	0	0	0	0	0

Bits 15:8 – CCMP[15:8] Capture/Compare Value High Byte
These bits hold the MSB of the 16-bit compare, capture, and top value.

Bits 7:0 – CCMP[7:0] Capture/Compare Value Low Byte
These bits hold the LSB of the 16-bit compare, capture, and top value.

21. RTC - Real-Time Counter

21.1 Features

- 16-bit resolution
- Selectable clock sources
- Programmable 15-bit clock prescaling
- One compare register
- One period register
- Clear timer on period overflow
- Optional interrupt/Event on overflow and compare match
- Periodic interrupt and Event
- Crystal Error Correction

21.2 Overview

The RTC peripheral offers two timing functions: the Real-Time Counter (RTC) and a Periodic Interrupt Timer (PIT).

The PIT functionality can be enabled independently of the RTC functionality.

RTC - Real-Time Counter
The RTC counts (prescaled) clock cycles in a Counter register, and compares the content of the Counter register to a Period register and a Compare register.

The RTC can generate both interrupts and events on compare match or overflow. It will generate a compare interrupt and/or event at the first count after the counter equals the Compare register value, and an overflow interrupt and/or event at the first count after the counter value equals the Period register value. The overflow will also reset the counter value to zero.

The RTC peripheral typically runs continuously, including in Low-Power Sleep modes, to keep track of time. It can wake up the device from Sleep modes and/or interrupt the device at regular intervals.

The reference clock is typically the 32 KHz output from an external crystal. The RTC can also be clocked from an external clock signal, the 32 KHz internal Ultra Low-Power Oscillator (OSCULP32K), or the OSCULP32K divided by 32.

The RTC peripheral includes a 15-bit programmable prescaler that can scale down the reference clock before it reaches the counter. A wide range of resolutions and time-out periods can be configured for the RTC. With a 32.768 kHz clock source, the maximum resolution is 30.5 µs, and timeout periods can be up to two seconds. With a resolution of 1s, the maximum timeout period is more than 18 hours (65536 seconds).

The RTC also supports correction when operated using external crystal selection. An externally calibrated value will be used for correction. The RTC can be adjusted by software to an accuracy of ±1PPM. The RTC correction operation will either speed up (by skipping count) or slow down (by adding extra count) the prescaler to account for the crystal error.

PIT - Periodic Interrupt Timer
Using the same clock source as the RTC function, the PIT can request an interrupt or trigger an output event on every *n*th clock period. *n* can be selected from {4, 8, 16,.. 32768} for interrupts, and from {64, 128, 256,... 8192} for events.

The PIT uses the same clock source (CLK_RTC) as the RTC function.

21.2.1 Block Diagram

Figure 21-1. Block Diagram

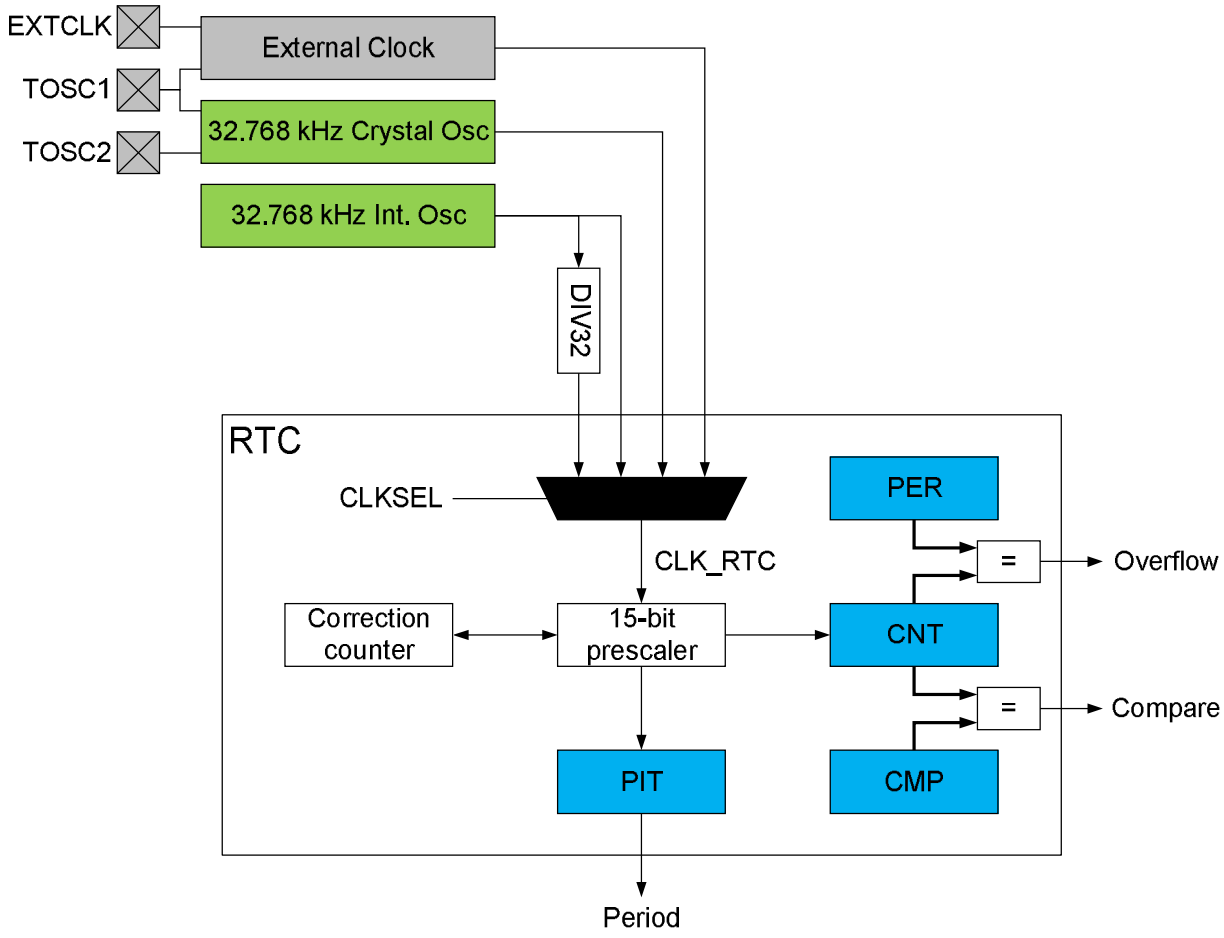

21.3 Clocks

System clock (CLK_PER) is required to be at least four times faster than RTC clock (CLK_RTC) for reading counter value, and this is regardless of the prescaler setting.

A 32.768 kHz crystal can be connected to the TOSC1 or TOSC2 pins, along with any required load capacitors. Alternatively, an external digital clock can be connected to the TOSC1 pin.

21.4 RTC Functional Description

The RTC peripheral offers two timing functions: the Real-Time Counter (RTC) and a Periodic Interrupt Timer (PIT). This subsection describes the RTC.

21.4.1 Initialization

To operate the RTC, the source clock for the RTC counter must be configured before enabling the RTC peripheral, and the desired actions (interrupt requests, output Events).

21.4.1.1 Configure the Clock CLK_RTC

To configure CLK_RTC, follow these steps:

1. Configure the desired oscillator to operate as required, in the Clock Controller peripheral (CLKCTRL).
2. Write the Clock Select bits (CLKSEL) in the Clock Selection register (RTC.CLKSEL) accordingly.

The CLK_RTC clock configuration is used by both RTC and PIT functionality.

21.4.1.2 Configure RTC

To operate the RTC, follow these steps:

1. Set the Compare value in the Compare register (RTC.CMP), and/or the Overflow value in the Top register (RTC.PER).
2. Enable the desired Interrupts by writing to the respective Interrupt Enable bits (CMP, OVF) in the Interrupt Control register (RTC.INTCTRL).
3. Configure the RTC-internal prescaler and enable the RTC by writing the desired value to the PRESCALER bit field and a '1' to the RTC Enable bit (RTCEN) in the Control A register (RTC.CTRLA).

Note: The RTC peripheral is used internally during device start-up. Always check the Busy bits in the RTC.STATUS and RTC.PITSTATUS registers, also on initial configuration.

21.4.2 Operation - RTC

21.4.2.1 Enabling, Disabling, and Resetting

The RTC is enabled by setting the Enable bit in the Control A register (ENABLE bit in RTC.CTRLA to 1). The RTC is disabled by writing ENABLE bit in RTC.CTRLA to 0.

21.5 PIT Functional Description

The RTC peripheral offers two timing functions: the Real-Time Counter (RTC) and a Periodic Interrupt Timer (PIT). This subsection describes the PIT.

21.5.1 Initialization

To operate the PIT, follow these steps:

1. Configure the RTC clock CLK_RTC as described in 21.4.1.1 Configure the Clock CLK_RTC.
2. Enable the interrupt by writing a '1' to the Periodic Interrupt bit (PI) in the PIT Interrupt Control register (RTC.PITINTCTRL).
3. Select the period for the interrupt and enable the PIT by writing the desired value to the PERIOD bit field and a '1' to the PIT Enable bit (PITEN) in the PIT Control A register (RTC.PITCTRLA).

Note: The RTC peripheral is used internally during device start-up. Always check the Busy bits in the RTC.STATUS and RTC.PITSTATUS registers, also on initial configuration.

21.5.2 Operation - PIT

21.5.2.1 Enabling, Disabling, and Resetting

The PIT is enabled by setting the Enable bit in the PIT Control A register (the PITEN bit in RTC.PITCTRLA to 1). The PIT is disabled by writing the PITEN bit in RTC.PITCTRLA to 0.

21.5.2.2 PIT Interrupt Timing

Timing of the First Interrupt

The PIT function and the RTC function are running off the same counter inside the prescaler, but both functions' periods can be configured independently:

- The RTC period is configured by writing the PRESCALER bit field in RTC.CTRLA.
- The PIT period is configured by writing the PERIOD bit field in RTC.PITCTRLA.

The prescaler is OFF when both functions are OFF (RTC Enable bit (RTCEN) in RTC.CTRLA and PIT Enable bit (PITEN) in RTC.PITCTRLA are zero), but it is running (i.e. its internal counter is counting) when either function is enabled.
For this reason, the timing of the first PIT interrupt and the first RTC count tick will be unknown (anytime between enabling and a full period).

Continuous Operation

After the first interrupt, the PIT will continue toggling every ½ PIT period, resulting in a full PIT period signal.

Example 21-1. PIT Timing Diagram for PERIOD=CYC16

For PERIOD=CYC16 in RTC.PITCTRLA, the PIT output effectively follows the state of prescaler counter bit 3, so the resulting interrupt output has a period of 16 CLK_RTC cycles.

The time between writing PITEN to '1' and the first PIT interrupt can vary between virtually 0 and a full PIT period of 16 CLK_RTC cycles. The precise delay between enabling the PIT and its first output is depending on the prescaler's counting phase: the depicted first interrupt in the lower figure is produced by writing PITEN to '1' at any time inside the leading time window.

Figure 21-2. Timing Between PIT Enable and First Interrupt

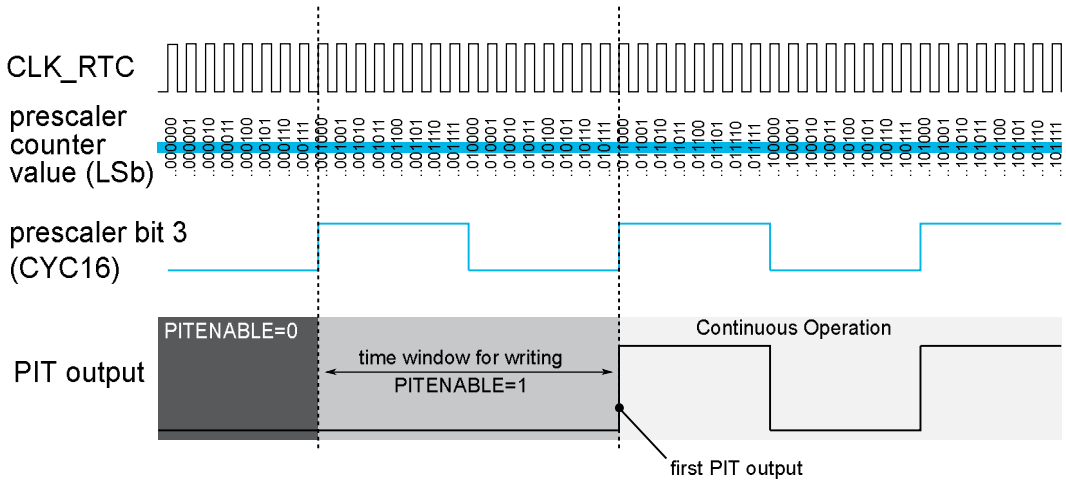

21.6 Crystal Error Correction

The prescaler for the RTC and PIT can do internal correction (when CORREN bit in RTC.CTRLA is '1') on the crystal clock by taking the PPM error value from the CALIB register.

The CALIB register must be written by the user based on information about the frequency error. Correction is done within an interval of approximately 1 million cycles of the input clock. The correction operation is performed by adding or removing one cycle. These single-cycle operations will be performed repeatedly the error number of times (ERROR bits in RTC.CALIB) spread throughout the 1 million cycle correction interval.

The correction of the clock will be reflected in the RTC count value available through the RTC.CNTx registers or in the PIT intervals.

If disabling the correction feature, an ongoing correction cycle will be completed before the function is disabled.

21.7 Events

The RTC, when enabled, will generate the following output events:

- Overflow (OVF): Generated when the counter has reached its top value and wrapped to zero. The generated strobe is synchronous with CLK_RTC and lasts one CLK_RTC cycle.
- Compare (CMP): Indicates a match between the counter value and the Compare register. The generated strobe is synchronous with CLK_RTC and lasts one CLK_RTC cycle.

When enabled, the PIT generates the following 50% duty cycle clock signals on its event outputs:

- Event 0: Clock period = 8192 RTC clock cycles
- Event 1: Clock period = 4096 RTC clock cycles
- Event 2: Clock period = 2048 RTC clock cycles

- Event 3: Clock period = 1024 RTC clock cycles
- Event 4: Clock period = 512 RTC clock cycles
- Event 5: Clock period = 256 RTC clock cycles
- Event 6: Clock period = 128 RTC clock cycles
- Event 7: Clock period = 64 RTC clock cycles

The event users are configured by the Event System (EVSYS).

21.8 Interrupts

Table 21-1. Available Interrupt Vectors and Sources

Name	Vector Description	Conditions
RTC	Real-time counter overflow and compare match interrupt	• Overflow (OVF): The counter has reached its top value and wrapped to zero. • Compare (CMP): Match between the counter value and the compare register.
PIT	Periodic Interrupt Timer interrupt	A time period has passed, as configured by the PERIOD bits in RTC.PITCTRLA.

When an interrupt condition occurs, the corresponding interrupt flag is set in the Interrupt Flags register of the peripheral (*peripheral*.INTFLAGS).

An interrupt source is enabled or disabled by writing to the corresponding enable bit in the peripheral's Interrupt Control (*peripheral*.INTCTRL) register.

An interrupt request is generated when the corresponding interrupt source is enabled, and the interrupt flag is set. The interrupt request remains active until the interrupt flag is cleared. See the peripheral's INTFLAGS register for details on how to clear interrupt flags.

Note that:

- The RTC has two INTFLAGS registers: RTC.INTFLAGS and RTC.PITINTFLAGS.
- The RTC has two INTCTRL registers: RTC.INTCTRL and RTC.PITINTCTRL.

21.9 Sleep Mode Operation

The RTC will continue to operate in Idle Sleep mode. It will run in Standby Sleep mode if the RUNSTDBY bit in RTC.CTRLA is set.

The PIT will continue to operate in any sleep mode.

21.10 Synchronization

Both the RTC and the PIT are asynchronous, operating from a different clock source (CLK_RTC) independently of the main clock (CLK_PER). For Control and Count register updates, it will take a number of RTC clock and/or peripheral clock cycles before an updated register value is available in a register or until a configuration change has an effect on the RTC or PIT, respectively. This synchronization time is described for each register in the Register Description section.

For some RTC registers, a Synchronization Busy flag is available (CMPBUSY, PERBUSY, CNTBUSY, CTRLABUSY) in the STATUS register (RTC.STATUS).

For the RTC.PITCTRLA register, a Synchronization Busy flag (SYNCBUSY) is available in the PIT STATUS register (RTC.PITSTATUS).

Check these flags before writing to the mentioned registers.

21.11 Debug Operation

RTC If the Debug Run bit (DBGRUN) in the Debug Control register (DBGCTRL) is ‘1’ the RTC will continue normal operation.

If DBGRUN in DBGCTRL is ‘0’ and the CPU is halted, the RTC will halt operation and ignore incoming events.

PIT If the Debug Run bit (DBGRUN) in the PIT Debug Control register (PITDBGCTRL) is ‘1’ the PIT will continue normal operation.

If DBGRUN in PITDBGCTRL is ‘0’ in debug mode and the CPU is halted, the PIT output will be low.

If the PIT output was high at the time, a new positive edge occurs to set the interrupt flag when re-starting from a break. The result is an additional PIT interrupt that would not happen during normal operation.

If the PIT output was low at the break, the PIT will resume low without additional interrupt.

21.12 Register Summary - RTC

Offset	Name	Bit Pos.								
0x00	CTRLA	7:0	RUNSTDBY	PRESCALER[3:0]				CORREN		RTCEN
0x01	STATUS	7:0					CMPBUSY	PERBUSY	CNTBUSY	CTRLABUSY
0x02	INTCTRL	7:0							CMP	OVF
0x03	INTFLAGS	7:0							CMP	OVF
0x04	TEMP	7:0	TEMP[7:0]							
0x05	DBGCTRL	7:0								DBGRUN
0x06	CALIB	7:0	SIGN	ERROR[6:0]						
0x07	CLKSEL	7:0							CLKSEL[1:0]	
0x08	CNT	7:0	CNT[7:0]							
		15:8	CNT[15:8]							
0x0A	PER	7:0	PER[7:0]							
		15:8	PER[15:8]							
0x0C	CMP	7:0	CMP[7:0]							
		15:8	CMP[15:8]							
0x0E ... 0x0F	Reserved									
0x10	PITCTRLA	7:0		PERIOD[3:0]						PITEN
0x11	PITSTATUS	7:0								CTRLBUSY
0x12	PITINTCTRL	7:0								PI
0x13	PITINTFLAGS	7:0								PI
0x14	Reserved									
0x15	PITDBGCTRL	7:0								DBGRUN

21.13 Register Description

21.13.1 Control A

Name: CTRLA
Offset: 0x00
Reset: 0x00
Property: -

Bit	7	6	5	4	3	2	1	0
	RUNSTDBY	PRESCALER[3:0]				CORREN		RTCEN
Access	R/W	R/W	R/W	R/W	R/W	R/W		R/W
Reset	0	0	0	0	0	0		0

Bit 7 – RUNSTDBY Run in Standby

Value	Description
0	RTC disabled in Standby sleep mode
1	RTC enabled in Standby sleep mode

Bits 6:3 – PRESCALER[3:0] Prescaler
These bits define the prescaling of the CLK_RTC clock signal. Due to synchronization between the RTC clock and system clock domains, there is a latency of two RTC clock cycles from updating the register until this has an effect. Application software needs to check that the CTRLABUSY flag in RTC.STATUS is cleared before writing to this register.

Value	Name	Description
0x0	DIV1	RTC clock/1 (no prescaling)
0x1	DIV2	RTC clock/2
0x2	DIV4	RTC clock/4
0x3	DIV8	RTC clock/8
0x4	DIV16	RTC clock/16
0x5	DIV32	RTC clock/32
0x6	DIV64	RTC clock/64
0x7	DIV128	RTC clock/128
0x8	DIV256	RTC clock/256
0x9	DIV512	RTC clock/512
0xA	DIV1024	RTC clock/1024
0xB	DIV2048	RTC clock/2048
0xC	DIV4096	RTC clock/4096
0xD	DIV8192	RTC clock/8192
0xE	DIV16384	RTC clock/16384
0xF	DIV32768	RTC clock/32768

Bit 2 – CORREN Frequency Correction Enable

Value	Description
0	Frequency correction is disabled
1	Frequency correction is enabled

Bit 0 – RTCEN RTC Peripheral Enable

Value	Description
0	RTC peripheral disabled
1	RTC peripheral enabled

21.13.2 Status

Name: STATUS
Offset: 0x01
Reset: 0x00
Property: -

Bit	7	6	5	4	3	2	1	0
					CMPBUSY	PERBUSY	CNTBUSY	CTRLABUSY
Access					R	R	R	R
Reset					0	0	0	0

Bit 3 – CMPBUSY Compare Synchronization Busy
This bit is indicating whether the RTC is busy synchronizing the Compare register (RTC.CMP) in RTC clock domain.

Bit 2 – PERBUSY Period Synchronization Busy
This bit is indicating whether the RTC is busy synchronizing the Period register (RTC.PER) in RTC clock domain.

Bit 1 – CNTBUSY Counter Synchronization Busy
This bit is indicating whether the RTC is busy synchronizing the Count register (RTC.CNT) in RTC clock domain.

Bit 0 – CTRLABUSY Control A Synchronization Busy
This bit is indicating whether the RTC is busy synchronizing the Control A register (RTC.CTRLA) in RTC clock domain.

21.13.3 Interrupt Control

Name: INTCTRL
Offset: 0x02
Reset: 0x00
Property: -

Bit	7	6	5	4	3	2	1	0
							CMP	OVF
Access							R/W	R/W
Reset							0	0

Bit 1 – CMP Compare Match Interrupt Enable
Enable interrupt-on-compare match (i.e., when the Counter value (CNT) matches the Compare value (CMP)).

Bit 0 – OVF Overflow Interrupt Enable
Enable interrupt-on-counter overflow (i.e., when the Counter value (CNT) matched the Period value (PER) and wraps around to zero).

21.13.4 Interrupt Flag

Name: INTFLAGS
Offset: 0x03
Reset: 0x00
Property: -

Bit	7	6	5	4	3	2	1	0
							CMP	OVF
Access							R/W	R/W
Reset							0	0

Bit 1 – CMP Compare Match Interrupt Flag
This flag is set when the Counter value (CNT) matches the Compare value (CMP).
Writing a ‘1’ to this bit clears the flag.

Bit 0 – OVF Overflow Interrupt Flag
This flag is set when the Counter value (CNT) has reached the Period value (PER) and wrapped to zero.
Writing a ‘1’ to this bit clears the flag.

21.13.5 Temporary

Name: TEMP
Offset: 0x4
Reset: 0x00
Property: -

The Temporary register is used by the CPU for single-cycle, 16-bit access to the 16-bit registers of this peripheral. It can be read and written by software. Refer to 16-bit access in the AVR CPU chapter. There is one common Temporary register for all the 16-bit registers of this peripheral.

Bit	7	6	5	4	3	2	1	0
	TEMP[7:0]							
Access	R/W	R/W	R/W	R/W	R/W	R/W	R/W	R/W
Reset	0	0	0	0	0	0	0	0

Bits 7:0 – TEMP[7:0] Temporary
Temporary register for read/write operations in 16-bit registers.

21.13.6 Debug Control

Name: DBGCTRL
Offset: 0x05
Reset: 0x00
Property: -

Bit	7	6	5	4	3	2	1	0
								DBGRUN
Access								R/W
Reset								0

Bit 0 – DBGRUN Debug Run

Value	Description
0	The peripheral is halted in Break Debug mode and ignores events
1	The peripheral will continue to run in Break Debug mode when the CPU is halted

21.13.7 Crystal Frequency Calibration

Name: CALIB
Offset: 0x06
Reset: 0x00
Property: -

This register stores the error value and the type of correction to be done. This register is written by software with any error value based on external calibration and/or temperature correction/s.

Bit	7	6	5	4	3	2	1	0
	SIGN	ERROR[6:0]						
Access	R/W	R/W	R/W	R/W	R/W	R/W	R/W	R/W
Reset	0	0	0	0	0	0	0	0

Bit 7 – SIGN Error Correction Sign Bit
This bit is used to indicate the direction of the correction.

Value	Description
0x0	Positive correction causing prescaler to count slower.
0x1	Negative correction causing prescaler to count faster. Requires that prescaler configuration is set to minimum DIV2.

Bits 6:0 – ERROR[6:0] Error Correction Value
The number of correction clocks for each million RTC clock cycles interval (ppm).

21.13.8 Clock Selection

Name: CLKSEL
Offset: 0x07
Reset: 0x00
Property: -

Bit	7	6	5	4	3	2	1	0
							CLKSEL[1:0]	
Access							R/W	R/W
Reset							0	0

Bits 1:0 – CLKSEL[1:0] Clock Select
Writing these bits select the source for the RTC clock (CLK_RTC).
When configuring the RTC to use either XOSC32K or the external clock on TOSC1, XOSC32K needs to be enabled and the Source Select bit (SEL) and Run Standby bit (RUNSTDBY) in the XOSC32K Control A register of the Clock Controller (CLKCTRL.XOSC32KCTRLA) must be configured accordingly.

Value	Name	Description
0x0	INT32K	32.768 kHz from OSCULP32K
0x1	INT1K	1.024 kHz from OSCULP32K
0x2	TOSC32K	32.768 kHz from XOSC32K or external clock from TOSC1
0x3	EXTCLK	External clock from EXTCLK pin

21.13.9 Count

Name: CNT
Offset: 0x08
Reset: 0x0000
Property: -

The RTC.CNTL and RTC.CNTH register pair represents the 16-bit value, CNT. The low byte [7:0] (suffix L) is accessible at the original offset. The high byte [15:8] (suffix H) can be accessed at offset + 0x01. For more details on reading and writing 16-bit registers, refer to Accessing 16-bit Registers in the CPU chapter.

Due to synchronization between the RTC clock and system clock domains, there is a latency of two RTC clock cycles from updating the register until this has an effect. Application software needs to check that the CNTBUSY flag in RTC.STATUS is cleared before writing to this register.

Bit	15	14	13	12	11	10	9	8
	CNT[15:8]							
Access	R/W	R/W	R/W	R/W	R/W	R/W	R/W	R/W
Reset	0	0	0	0	0	0	0	0

Bit	7	6	5	4	3	2	1	0
	CNT[7:0]							
Access	R/W	R/W	R/W	R/W	R/W	R/W	R/W	R/W
Reset	0	0	0	0	0	0	0	0

Bits 15:8 – CNT[15:8] Counter High Byte
These bits hold the MSB of the 16-bit Counter register.

Bits 7:0 – CNT[7:0] Counter Low Byte
These bits hold the LSB of the 16-bit Counter register.

21.13.10 Period

Name: PER
Offset: 0x0A
Reset: 0xFFFF
Property: -

The RTC.PERL and RTC.PERH register pair represents the 16-bit value, PER. The low byte [7:0] (suffix L) is accessible at the original offset. The high byte [15:8] (suffix H) can be accessed at offset + 0x01. For more details on reading and writing 16-bit registers, refer to Accessing 16-bit Registers in the CPU chapter.

Due to synchronization between the RTC clock and system clock domains, there is a latency of two RTC clock cycles from updating the register until this has an effect. Application software needs to check that the PERBUSY flag in RTC.STATUS is cleared before writing to this register.

Bit	15	14	13	12	11	10	9	8
	PER[15:8]							
Access	R/W	R/W	R/W	R/W	R/W	R/W	R/W	R/W
Reset	1	1	1	1	1	1	1	1

Bit	7	6	5	4	3	2	1	0
	PER[7:0]							
Access	R/W	R/W	R/W	R/W	R/W	R/W	R/W	R/W
Reset	1	1	1	1	1	1	1	1

Bits 15:8 – PER[15:8] Period High Byte
These bits hold the MSB of the 16-bit Period register.

Bits 7:0 – PER[7:0] Period Low Byte
These bits hold the LSB of the 16-bit Period register.

21.13.11 Compare

Name: CMP
Offset: 0x0C
Reset: 0x0000
Property: -

The RTC.CMPL and RTC.CMPH register pair represents the 16-bit value, CMP. The low byte [7:0] (suffix L) is accessible at the original offset. The high byte [15:8] (suffix H) can be accessed at offset + 0x01. For more details on reading and writing 16-bit registers, refer to Accessing 16-bit Registers in the CPU chapter.

Bit	15	14	13	12	11	10	9	8
	CMP[15:8]							
Access	R/W	R/W	R/W	R/W	R/W	R/W	R/W	R/W
Reset	0	0	0	0	0	0	0	0

Bit	7	6	5	4	3	2	1	0
	CMP[7:0]							
Access	R/W	R/W	R/W	R/W	R/W	R/W	R/W	R/W
Reset	0	0	0	0	0	0	0	0

Bits 15:8 – CMP[15:8] Compare High Byte
These bits hold the MSB of the 16-bit Compare register.

Bits 7:0 – CMP[7:0] Compare Low Byte
These bits hold the LSB of the 16-bit Compare register.

21.13.12 Periodic Interrupt Timer Control A

Name: PITCTRLA
Offset: 0x10
Reset: 0x00
Property: -

Bit	7	6	5	4	3	2	1	0
		PERIOD[3:0]						PITEN
Access		R/W	R/W	R/W	R/W			R/W
Reset		0	0	0	0			0

Bits 6:3 – PERIOD[3:0] Period
Writing this bit field selects the number of RTC clock cycles between each interrupt.

Value	Name	Description
0x0	OFF	No interrupt
0x1	CYC4	4 cycles
0x2	CYC8	8 cycles
0x3	CYC16	16 cycles
0x4	CYC32	32 cycles
0x5	CYC64	64 cycles
0x6	CYC128	128 cycles
0x7	CYC256	256 cycles
0x8	CYC512	512 cycles
0x9	CYC1024	1024 cycles
0xA	CYC2048	2048 cycles
0xB	CYC4096	4096 cycles
0xC	CYC8192	8192 cycles
0xD	CYC16384	16384 cycles
0xE	CYC32768	32768 cycles
0xF	-	Reserved

Bit 0 – PITEN Periodic Interrupt Timer Enable
Writing a '1' to this bit enables the Periodic Interrupt Timer.

21.13.13 Periodic Interrupt Timer Status

Name: PITSTATUS
Offset: 0x11
Reset: 0x00
Property: -

Bit	7	6	5	4	3	2	1	0
								CTRLBUSY
Access								R
Reset								0

Bit 0 – CTRLBUSY PITCTRLA Synchronization Busy
This bit indicates whether the RTC is busy synchronizing the Periodic Interrupt Timer Control A register (RTC.PITCTRLA) in the RTC clock domain.

21.13.14 PIT Interrupt Control

Name: PITINTCTRL
Offset: 0x12
Reset: 0x00
Property: -

Bit	7	6	5	4	3	2	1	0
								PI
Access								R/W
Reset								0

Bit 0 – PI Periodic interrupt

Value	Description
0	The periodic interrupt is disabled
1	The periodic interrupt is enabled

21.13.15 PIT Interrupt Flag

Name: PITINTFLAGS
Offset: 0x13
Reset: 0x00
Property: -

Bit	7	6	5	4	3	2	1	0
								PI
Access								R/W
Reset								0

Bit 0 – PI Periodic interrupt Flag
This flag is set when a periodic interrupt is issued.
Writing a ‘1’ clears the flag.

21.13.16 Periodic Interrupt Timer Debug Control

Name: PITDBGCTRL
Offset: 0x15
Reset: 0x00
Property: -

Bit	7	6	5	4	3	2	1	0
								DBGRUN
Access								R/W
Reset								0

Bit 0 – DBGRUN Debug Run
Writing this bit to '1' will enable the PIT to run in Debug mode while the CPU is halted.

Value	Description
0	The peripheral is halted in Break Debug mode and ignores events
1	The peripheral will continue to run in Break Debug mode when the CPU is halted

22. USART - Universal Synchronous and Asynchronous Receiver and Transmitter

22.1 Features

- Full-Duplex Operation
- Half-Duplex Operation:
  - One-Wire mode
  - RS-485 mode
- Asynchronous or Synchronous Operation
- Supports Serial Frames with Five, Six, Seven, Eight or Nine Data Bits and One or Two Stop Bits
- Fractional Baud Rate Generator:
  - Can generate the desired baud rate from any system clock frequency
  - No need for an external oscillator
- Built-In Error Detection and Correction Schemes:
  - Odd or even parity generation and parity check
  - Buffer overflow and frame error detection
  - Noise filtering including false Start bit detection and digital low-pass filter
- Separate Interrupts for:
  - Transmit complete
  - Transmit Data register empty
  - Receive complete
- Master SPI Mode
- Multiprocessor Communication Mode
- Start-of-Frame Detection
- IRCOM Module for IrDA® Compliant Pulse Modulation/Demodulation
- LIN Slave Support

22.2 Overview

The Universal Synchronous and Asynchronous serial Receiver and Transmitter (USART) is a fast and flexible serial communication peripheral. The USART supports a number of different modes of operation that can accommodate multiple types of applications and communication devices. For example, the One-Wire Half-Duplex mode is useful when low pin count applications are desired. The communication is frame-based, and the frame format can be customized to support a wide range of standards.

The USART is buffered in both directions, enabling continued data transmission without any delay between frames. Separate interrupts for receive and transmit completion allow fully interrupt-driven communication.

The transmitter consists of a single-write buffer, a Shift register, and control logic for different frame formats. The receiver consists of a two-level receive buffer and a Shift register. The status information of the received data is available for error checking. Data and clock recovery units ensure robust synchronization and noise filtering during asynchronous data reception.

22.2.1 Block Diagram

Figure 22-1. USART Block Diagram

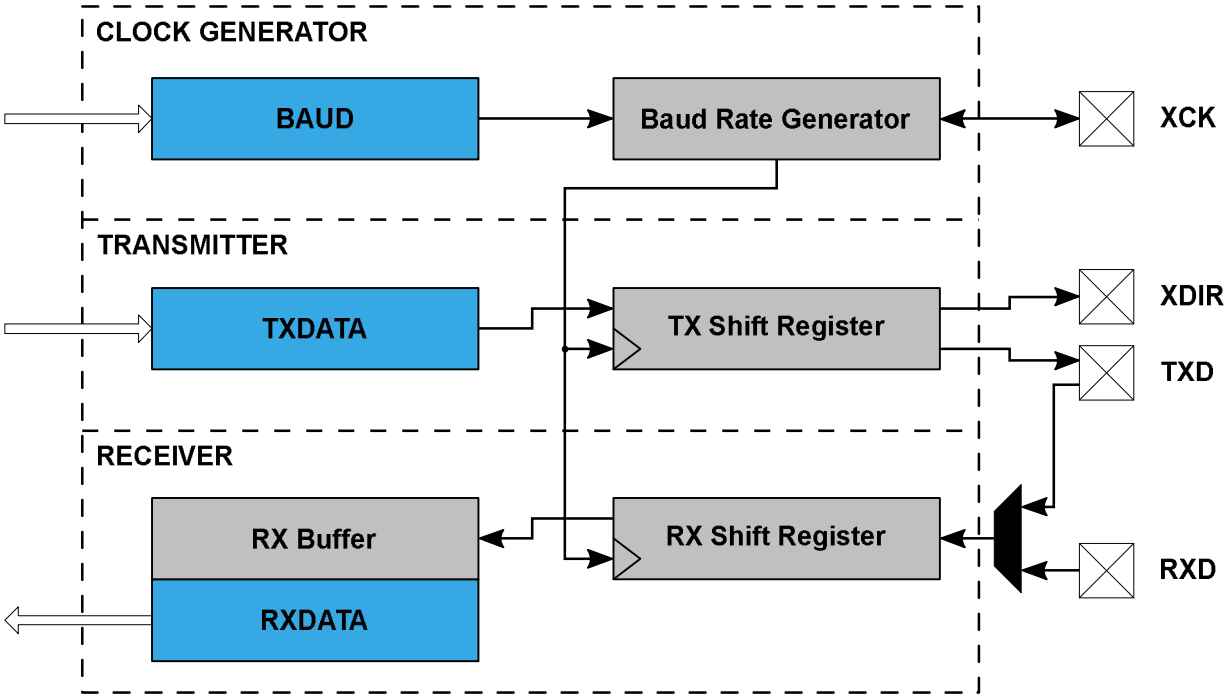

22.2.2 Signal Description

Signal	Type	Description
XCK	Output/input	Clock for synchronous operation
XDIR	Output	Transmit enable for RS-485
TxD	Output/input	Transmitting line (and receiving line in One-Wire mode)
RxD	Input	Receiving line

22.3 Functional Description

22.3.1 Initialization

Full Duplex Mode:

1. Set the baud rate (USARTn.BAUD).
2. Set the frame format and mode of operation (USARTn.CTRLC).
3. Configure the TXD pin as an output.
4. Enable the transmitter and the receiver (USARTn.CTRLB).

Note:

- For interrupt-driven USART operation, global interrupts must be disabled during the initialization
- Before doing a reinitialization with a changed baud rate or frame format, be sure that there are no ongoing transmissions while the registers are changed

One-Wire Half Duplex Mode:

1. Internally connect the TXD to the USART receiver (the LBME bit in the USARTn.CTRLA register).
2. Enable internal pull-up for the RX/TX pin (the PULLUPEN bit in the PORTx.PINnCTRL register).

3. Enable Open-Drain mode (the ODME bit in the USARTn.CTRLB register).
4. Set the baud rate (USARTn.BAUD).
5. Set the frame format and mode of operation (USARTn.CTRLC).
6. Enable the transmitter and the receiver (USARTn.CTRLB).

Note:

- When Open-Drain mode is enabled, the TXD pin is automatically set to output by hardware
- For interrupt-driven USART operation, global interrupts must be disabled during the initialization
- Before doing a reinitialization with a changed baud rate or frame format, be sure that there are no ongoing transmissions while the registers are changed

22.3.2 Operation

22.3.2.1 Frame Formats

The USART data transfer is frame-based. A frame starts with a Start bit followed by one character of data bits. If enabled, the Parity bit is inserted after the data bits and before the first Stop bit. After the Stop bit(s) of a frame, either the next frame can follow immediately, or the communication line can return to the Idle (high) state. The USART accepts all combinations of the following as valid frame formats:

- 1 Start bit
- 5, 6, 7, 8, or 9 data bits
- No, even, or odd Parity bit
- 1 or 2 Stop bits

The figure below illustrates the possible combinations of frame formats. Bits inside brackets are optional.

Figure 22-2. Frame Formats

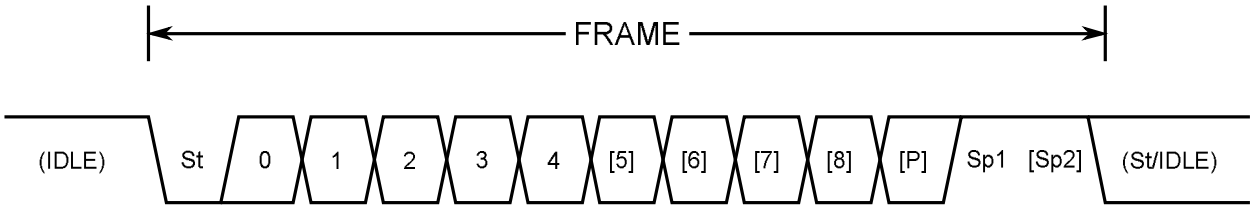

St Start bit, always low

(n) Data bits (0 to 8)

P Parity bit, may be odd or even

Sp Stop bit, always high

IDLE No transfer on the communication line (RxD or TxD). The Idle state is always high.

22.3.2.2 Clock Generation

The clock used for shifting and sampling data bits is generated internally by the fractional baud rate generator or externally from the Transfer Clock (XCK) pin.

Figure 22-3. Clock Generation Logic Block Diagram

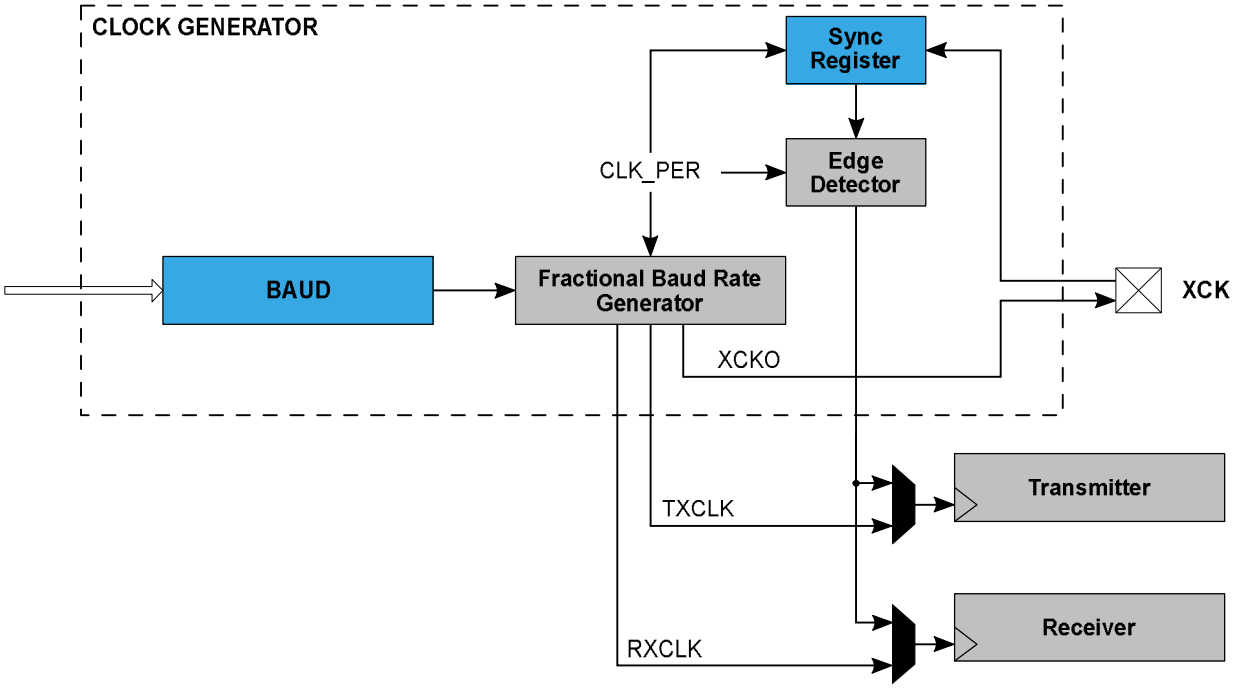

22.3.2.2.1 The Fractional Baud Rate Generator

In modes where the USART is not using the XCK input as a clock source, the fractional Baud Rate Generator is used to generate the clock. Baud rate is given in terms of bits per second (bps) and is configured by writing the USARTn.BAUD register. The baud rate (f_{BAUD}) is generated by dividing the peripheral clock (f_{CLK_PER}) by a division factor decided by the BAUD register.

The fractional Baud Rate Generator features hardware that accommodates cases where f_{CLK_PER} is not divisible by f_{BAUD}. Usually, this situation would lead to a rounding error. The fractional Baud Rate Generator expects the BAUD register to contain the desired division factor left shifted by six bits, as implemented by the equations in Table 22-1. The six LSbs will then hold the fractional part of the desired divisor. The fractional part of the BAUD register is used to dynamically adjust f_{BAUD} to achieve a closer approximation to the desired baud rate.

Since the baud rate cannot be higher than f_{CLK_PER}, the integer part of the BAUD register needs to be at least 1. Since the result is left shifted by six bits, the corresponding minimum value of the BAUD register is 64. The valid range is, therefore, 64 to 65535.

In Synchronous mode, only the 10-bit integer part of the BAUD register (BAUD[15:6]) determines the baud rate, and the fractional part (BAUD[5:0]) must, therefore, be written to zero.

The table below lists equations for translating baud rates into input values for the BAUD register. The equations take fractional interpretation into consideration, so the BAUD values calculated with these equations can be written directly to USARTn.BAUD without any additional scaling.

Table 22-1. Equations for Calculating Baud Rate Register Setting

Operating Mode	Conditions	Baud Rate (Bits Per Seconds)	USART.BAUD Register Value Calculation
Asynchronous	$f_{BAUD} \leq \frac{f_{CLK_PER}}{S}$ $USART.BAUD \geq 64$	$f_{BAUD} = \frac{64 \times f_{CLK_PER}}{S \times BAUD}$	$BAUD = \frac{64 \times f_{CLK_PER}}{S \times f_{BAUD}}$
Synchronous Master	$f_{BAUD} \leq \frac{f_{CLK_PER}}{S}$ $USART.BAUD \geq 64$	$f_{BAUD} = \frac{f_{CLK_PER}}{S \times BAUD[15:6]}$	$BAUD[15:6] = \frac{f_{CLK_PER}}{S \times f_{BAUD}}$

S is the number of samples per bit

- Asynchronous Normal mode: S = 16
- Asynchronous Double-Speed mode: S = 8
- Synchronous mode: S = 2

22.3.2.3 Data Transmission

The USART transmitter sends data by periodically driving the transmission line low. The data transmission is initiated by loading the transmit buffer (USARTn.TXDATA) with the data to be sent. The data in the transmit buffer is moved to the Shift register once it is empty and ready to send a new frame. After the Shift register is loaded with data, the data frame will be transmitted.

When the entire frame in the Shift register has been shifted out, and there are no new data present in the transmit buffer, the Transmit Complete Interrupt Flag (the TXCIF bit in the USARTn.STATUS register) is set, and the interrupt is generated if it is enabled.

TXDATA can only be written when the Data Register Empty Interrupt Flag (the DREIF bit in the USARTn.STATUS register) is set, indicating that the register is empty and ready for new data.

When using frames with fewer than eight bits, the Most Significant bits (MSb) written to TXDATA are ignored. If 9-bit characters are used, the DATA[8] bit in the USARTn.TXDATAH register has to be written before the DATA[7:0] bits in the USARTn.TXDATAL register.

22.3.2.3.1 Disabling the Transmitter

When disabling the transmitter, the operation will not become effective until ongoing and pending transmissions are completed (that is, when the Transmit Shift register and Transmit Buffer register do not contain data to be transmitted). When the transmitter is disabled, it will no longer override the TXD pin, and the PORT module regains control of the pin. The pin is automatically configured as an input by hardware regardless of its previous setting. The pin can now be used as a normal I/O pin with no port override from the USART.

22.3.2.4 Data Reception

The USART receiver samples the reception line to detect and interpret the received data. The direction of the pin must, therefore, be configured as an input by writing a '0' to the corresponding bit in the Direction register (PORTx.DIRn).

The receiver accepts data when a valid Start bit is detected. Each bit that follows the Start bit will be sampled at the baud rate or XCK clock and shifted into the Receive Shift register until the first Stop bit of a frame is received. A second Stop bit will be ignored by the receiver. When the first Stop bit is received, and a complete serial frame is present in the Receive Shift register, the contents of the Shift register will be moved into the receive buffer. The Receive Complete Interrupt Flag (the RXCIF bit in the USARTn.STATUS register) is set, and the interrupt is generated if enabled.

The RXDATA register is the part of the RX buffer that can be read by the application software when RXCIF is set. When using frames with fewer than eight bits, the unused Most Significant bits (MSb) are read as zero. If 9-bit characters are used, the DATA[8] bit in the USARTn.RXDATAH register must be read before the DATA[7:0] bits in the USARTn.RXDATAL register.

22.3.2.4.1 Receiver Error Flags

The USART receiver features error detection mechanisms that uncover corruption of the transmission. These mechanisms include the following:

- Frame Error detection - controls whether the received frame is valid
- Buffer Overflow detection - indicates data loss due to the receiver buffer being full and overwritten by the new data
- Parity Error detection - checks the validity of the incoming frame by calculating its parity and comparing it to the Parity bit

Each error detection mechanism controls one error flag that can be read in the RXDATAH register:

- Frame Error (FERR)
- Buffer Overflow (BUFOVF)
- Parity Error (PERR)

The error flags are located in the RX buffer together with their corresponding frame. The RXDATAH register that contains the error flags must be read before the RXDATAL register, since reading the RXDATAL register will trigger the RX buffer to shift out the RXDATA bytes.

Note: If the Character Size bit field (the CHSIZE bits in the USARTn.CTRLC register) is set to nine bits, low byte first (9BITL), the RXDATAH register will, instead of the RXDATAL register, trigger the RX buffer to shift out the RXDATA bytes. The RXDATAL register must, in that case, be read before the RXDATAH register.

22.3.2.4.2 Disabling the Receiver

When disabling the receiver, the operation is immediate. The receiver buffer will be flushed, and data from ongoing receptions will be lost.

22.3.2.4.3 Flushing the Receive Buffer

If the RX buffer has to be flushed during normal operation, repeatedly read the DATA location (USARTn.RXDATAH and USARTn.RXDATAL registers) until the Receive Complete Interrupt Flag (the RXCIF bit in the USARTn.RXDATAH register) is cleared.

22.3.3 Communication Modes

The USART is a flexible peripheral that supports multiple different communication protocols. The available modes of operation can be split into two groups: Synchronous and asynchronous communication.

The synchronous communication relies on one device on the bus to be the master, providing the rest of the devices with a clock signal through the XCK pin. All the devices use this common clock signal for both transmission and reception, requiring no additional synchronization mechanism.

The device can be configured to run either as a master or a slave on the synchronous bus.

The asynchronous communication does not use a common clock signal. Instead, it relies on the communicating devices to be configured with the same baud rate. When receiving a transmission, the hardware synchronization mechanisms are used to align the incoming transmission with the receiving device peripheral clock.

Four different modes of reception are available when communicating asynchronously. One of these modes can receive transmissions at twice the normal speed, sampling only eight times per bit instead of the normal 16. The other three operating modes use variations of synchronization logic, all receiving at normal speed.

22.3.3.1 Synchronous Operation

22.3.3.1.1 Clock Operation

The XCK pin direction controls whether the transmission clock is an input (Slave mode) or an output (Master mode). The corresponding port pin direction must be set to output for Master mode or to input for Slave mode (PORTx.DIRn). The data input (on RXD) is sampled at the XCK clock edge which is opposite the edge where data are transmitted (on TXD) as shown in the figure below.

Figure 22-4. Synchronous Mode XCK Timing

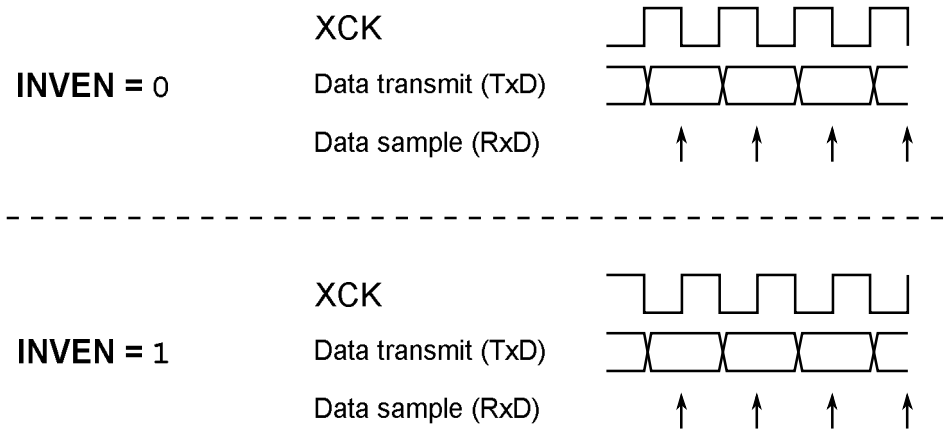

The I/O pin can be inverted by writing a '1' to the Inverted I/O Enable (INVEN) bit in the Pin n Control register of the port peripheral (PORTx.PINnCTRL). Using the inverted I/O setting for the corresponding XCK port pin, the XCK clock edges used for sampling RxD and transmitting on TxD can be selected. If the inverted I/O is disabled (INVEN = 0), the rising XCK clock edge represents the start of a new data bit, and the received data will be sampled at the falling

XCK clock edge. If inverted I/O is enabled (INVEN = 1), the falling XCK clock edge represents the start of a new data bit, and the received data will be sampled at the rising XCK clock edge.

22.3.3.1.2 External Clock Limitations

When the USART is configured in Synchronous Slave mode, the XCK signal must be provided externally by the master device. Since the clock is provided externally, configuring the BAUD register will have no impact on the transfer speed. Successful clock recovery requires the clock signal to be sampled at least twice for each rising and falling edge. The maximum XCK speed in Synchronous Operation mode, f_{Slave_XCK}, is therefore limited by:

$$f_{\text{Slave_XCK}} < \frac{f_{CLK_PER}}{4}$$

If the XCK clock has jitter, or if the high/low period duty cycle is not 50/50, the maximum XCK clock speed must be reduced accordingly to ensure that XCK is sampled a minimum of two times for each edge.

22.3.3.1.3 USART in Master SPI Mode

The USART may be configured to function with multiple different communication interfaces, and one of these is the Serial Peripheral Interface (SPI) where it can function as the master device. The SPI is a four-wire interface that enables a master device to communicate with one or multiple slaves.

Frame Formats

The serial frame for the USART in Master SPI mode always contains eight Data bits. The Data bits can be configured to be transmitted with either the LSb or MSb first, by writing to the Data Order bit (UDORD) in the Control C register (USARTn.CTRLC).

SPI does not use Start, Stop, or Parity bits, so the transmission frame can only consist of the Data bits.

Clock Generation

Being a master device in a synchronous communication interface, the USART in Master SPI mode must generate the interface clock to be shared with the slave devices. The interface clock is generated using the fractional Baud Rate Generator, which is described in 22.3.2.2.1 The Fractional Baud Rate Generator.

Each Data bit is transmitted by pulling the data line high or low for one full clock period. The receiver will sample bits in the middle of the transmitter hold period as shown in the figure below. It also shows how the timing scheme can be configured using the Inverted I/O Enable (INVEN) bit in the PORTx.PINnCTRL register and the USART Clock Phase (UCPHA) bit in the USARTn.CTRLC register.

Figure 22-5. Data Transfer Timing Diagrams

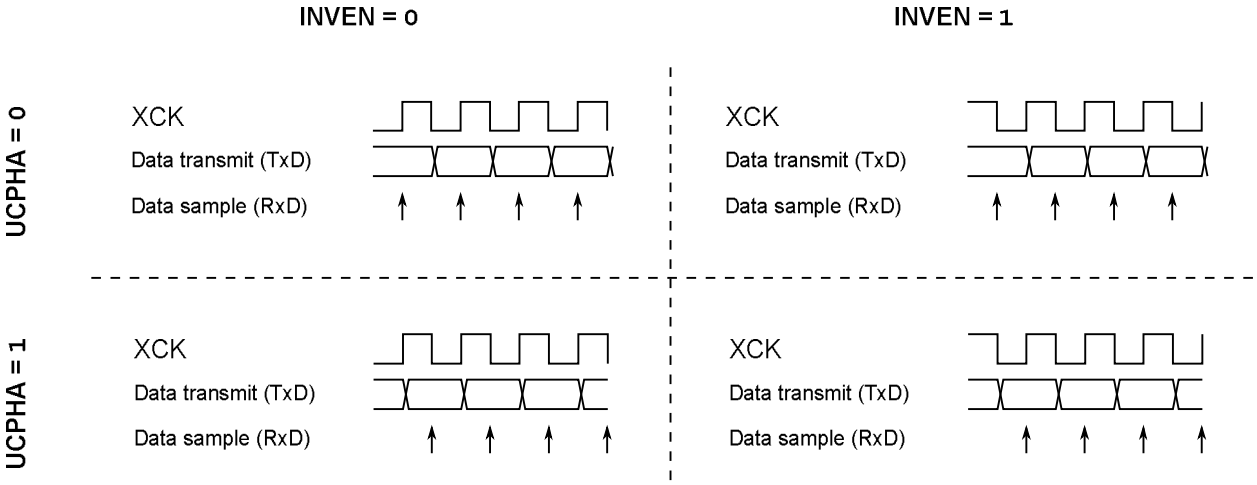

The table below further explains the figure above.

Table 22-2. Functionality of INVEN and UCPHA Bits

INVEN	UCPHA	Leading Edge (1)	Trailing Edge (1)
0	0	Rising, sample	Falling, transmit

.....continued

INVEN	UCPHA	Leading Edge (1)	Trailing Edge (1)
0	1	Rising, transmit	Falling, sample
1	0	Falling, sample	Rising, transmit
1	1	Falling, transmit	Rising, sample

Note:

1. The leading edge is the first clock edge of a clock cycle. The trailing edge is the last clock edge of a clock cycle.

Data Transmission

Data transmission in Master SPI mode is functionally identical to general USART operation as described in the *Operation* section. The transmitter interrupt flags and corresponding USART interrupts are also identical. See 22.3.2.3 Data Transmission for further description.

Data Reception

Data reception in Master SPI mode is identical in function to general USART operation as described in the *Operation* section. The receiver interrupt flags and the corresponding USART interrupts are also identical, aside from the receiver error flags that are not in use and always read as '0'. See 22.3.2.4 Data Reception for further description.

USART in Master SPI Mode vs. SPI

The USART in Master SPI mode is fully compatible with a stand-alone SPI peripheral. Their data frame and timing configurations are identical. Some SPI specific special features are, however, not supported with the USART in Master SPI mode:

- Write Collision Flag Protection
- Double-Speed mode
- Multi-Master support

A comparison of the pins used with USART in Master SPI mode and with SPI is shown in the table below.

Table 22-3. Comparison of USART in Master SPI Mode and SPI Pins

USART	SPI	Comment
TXD	MOSI	Master out
RXD	MISO	Master in
XCK	SCK	Functionally identical
-	$\overline{SS}$	Not supported by USART in Master SPI mode(1)

Note:

1. For the stand-alone SPI peripheral, this pin is used with the Multi-Master function or as a dedicated Slave Select pin. The Multi-Master function is not available with the USART in Master SPI mode, and no dedicated Slave Select pin is available.

22.3.3.2 Asynchronous Operation

22.3.3.2.1 Clock Recovery

Since there is no common clock signal when using Asynchronous mode, each communicating device generates separate clock signals. These clock signals must be configured to run at the same baud rate for the communication to take place. The devices, therefore, run at the same speed, but their timing is skewed in relation to each other. To accommodate this, the USART features a hardware clock recovery unit which synchronizes the incoming asynchronous serial frames with the internally generated baud rate clock.

The figure below illustrates the sampling process for the Start bit of an incoming frame. It shows the timing scheme for both Normal and Double-Speed mode (the RXMODE bits in the USARTn.CTRLB register configured respectively to 0x00 and 0x01). The sample rate for Normal mode is 16 times the baud rate, while the sample rate for Double-Speed mode is eight times the baud rate (see 22.3.3.2.4 Double-Speed Operation for more details). The horizontal

arrows show the maximum synchronization error. Note that the maximum synchronization error is larger in Double-Speed mode.

Figure 22-6. Start Bit Sampling

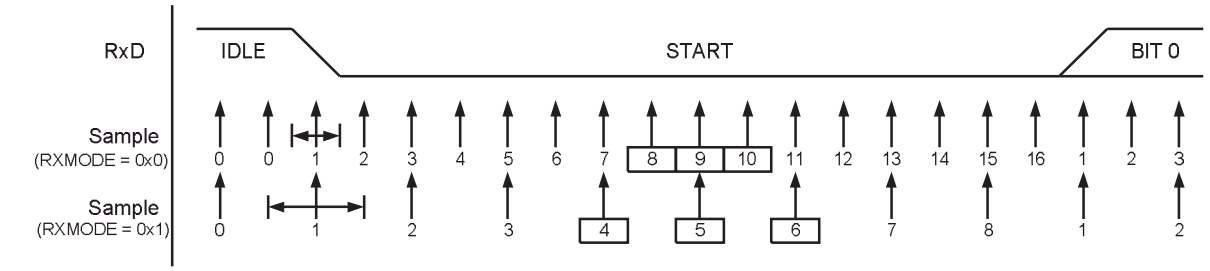

When the clock recovery logic detects a falling edge from Idle (high) state to the Start bit (low), the Start bit detection sequence is initiated. In the figure above, sample 1 denotes the first sample reading '0'. The clock recovery logic then uses three subsequent samples (samples 8, 9, and 10 in Normal mode, and samples 4, 5, 6 in Double-Speed mode) to decide if a valid Start bit is received. If two or three samples read '0', the Start bit is accepted. The clock recovery unit is synchronized, and the data recovery can begin. If less than two samples read '0', the Start bit is rejected. This process is repeated for each Start bit.

22.3.3.2.2 Data Recovery

As with clock recovery, the data recovery unit samples at a rate 8 or 16 times faster than the baud rate depending on whether it is running in Double-Speed or Normal mode, respectively. The figure below shows the sampling process for reading a bit in a received frame.

Figure 22-7. Sampling of Data and Parity Bits

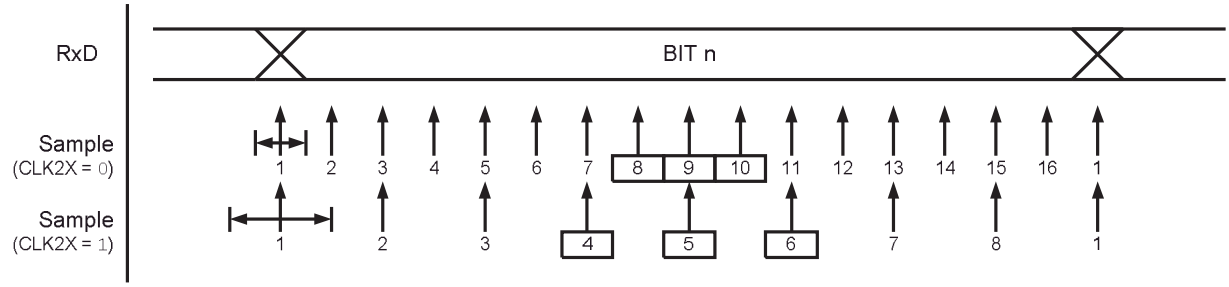

A majority voting technique is, like with clock recovery, used on the three center samples for deciding the logic level of the received bit. The process is repeated for each bit until a complete frame is received.

The data recovery unit will only receive the first Stop bit while ignoring the rest if there are more. If the sampled Stop bit is read '0', the Frame Error flag will be set. The figure below shows the sampling of a Stop bit. It also shows the earliest possible beginning of the next frame's Start bit.

Figure 22-8. Stop Bit and Next Start Bit Sampling

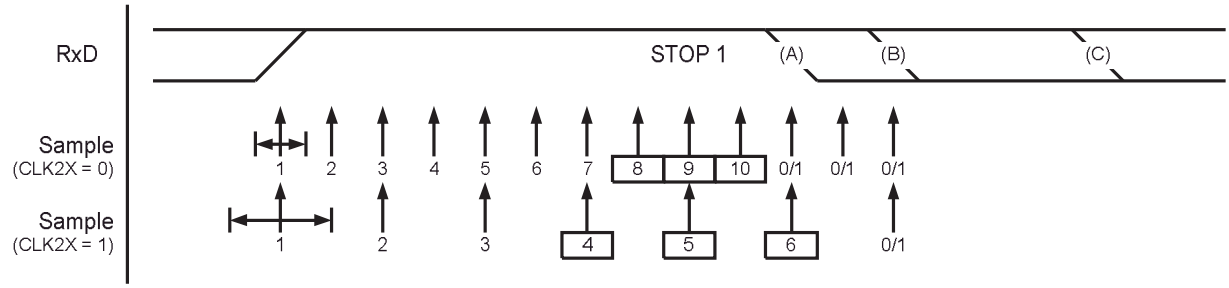

A new high-to-low transition indicating the Start bit of a new frame can come right after the last of the bits used for majority voting. For Normal-Speed mode, the first low-level sample can be at the point marked (A) in the figure above. For Double-Speed mode the first low level must be delayed to point (B), being the first sample after the majority vote samples. Point (C) marks a Stop bit of full length at the nominal baud rate.

22.3.3.2.3 Error Tolerance

The speed of the internally generated baud rate and the externally received data rate should ideally be identical, but due to natural clock source error, this is normally not the case. The USART is tolerant of such error, and the limits of this tolerance make up what is sometimes known as the Operational Range.

The following tables list the operational range of the USART, being the maximum receiver baud rate error that can be tolerated. Note that Normal-Speed mode has higher toleration of baud rate variations than Double-Speed mode.

Table 22-4. Recommended Maximum Receiver Baud Rate Error for Normal Speed Mode

D	R_{slow} [%]	R_{fast} [%]	Maximum Total Error [%]	Recommended Max. Receiver Error [%]
5	93.20	106.67	-6.80/+6.67	±3.0
6	94.12	105.79	-5.88/+5.79	±2.5
7	94.81	105.11	-5.19/+5.11	±2.0
8	95.36	104.58	-4.54/+4.58	±2.0
9	95.81	104.14	-4.19/+4.14	±1.5
10	96.17	103.78	-3.83/+3.78	±1.5

Note:

- D: The sum of character size and parity size (D = 5 to 10 bits)
- R_{SLOW}: The ratio of the slowest incoming data rate that can be accepted in relation to the receiver baud rate
- R_{FAST}: The ratio of the fastest incoming data rate that can be accepted in relation to the receiver baud rate

Table 22-5. Recommended Maximum Receiver Baud Rate Error for Double Speed Mode

D	R_{slow} [%]	R_{fast} [%]	Maximum Total Error [%]	Recommended Max. Receiver Error [%]
5	94.12	105.66	-5.88/+5.66	±2.5
6	94.92	104.92	-5.08/+4.92	±2.0
7	95.52	104.35	-4.48/+4.35	±1.5
8	96.00	103.90	-4.00/+3.90	±1.5
9	96.39	103.53	-3.61/+3.53	±1.5
10	96.70	103.23	-3.30/+3.23	±1.0

Note:

- D: The sum of character size and parity size (D = 5 to 10 bits)
- R_{SLOW}: The ratio of the slowest incoming data rate that can be accepted in relation to the receiver baud rate
- R_{FAST}: The ratio of the fastest incoming data rate that can be accepted in relation to the receiver baud rate

The recommendations of the maximum receiver baud rate error were made under the assumption that the receiver and transmitter equally divide the maximum total error.

The following equations are used to calculate the maximum ratio of the incoming data rate and the internal receiver baud rate.

$R_{SLOW} = \frac{S(D+1)}{S(D+1)+S_F-1}$	$R_{FAST} = \frac{S(D+2)}{S(D+1)+S_M}$

- D: The sum of character size and parity size (D = 5 to 10 bits)
- S: Samples per bit. S = 16 for Normal Speed mode and S = 8 for Double-Speed mode.
- S_F: First sample number used for majority voting. SF = 8 for Normal-Speed mode and SF = 4 for Double-Speed mode.

- S_M: Middle sample number used for majority voting. SM = 9 for Normal-Speed mode and SM = 5 for Double-Speed mode.
- R_{SLOW}: The ratio of the slowest incoming data rate that can be accepted in relation to the receiver baud rate
- R_{FAST}: The ratio of the fastest incoming data rate that can be accepted in relation to the receiver baud rate

22.3.3.2.4 Double-Speed Operation

Double-speed operation allows for higher baud rates under asynchronous operation with lower peripheral clock frequencies. This operation mode is enabled by writing the RXMODE bits in the Control B (USARTn.CTRLB) register to 0x01.

When enabled, the baud rate for a given asynchronous baud rate setting will be doubled. This is shown in the equations in 22.3.2.2.1 The Fractional Baud Rate Generator. In this mode, the receiver will use half the number of samples (reduced from 16 to 8) for data sampling and clock recovery. This requires a more accurate baud rate setting and peripheral clock. See 22.3.3.2.3 Error Tolerance for more details.

22.3.3.2.5 Auto-Baud

The auto-baud feature lets the USART configure its BAUD register based on input from a communication device. This allows the device to communicate autonomously with multiple devices communicating with different baud rates. The USART peripheral features two auto-baud modes: Generic Auto-Baud mode and LIN Constrained Auto-Baud mode.

Both auto-baud modes must receive an auto-baud frame as seen in the figure below.

Figure 22-9. Auto-Baud Timing

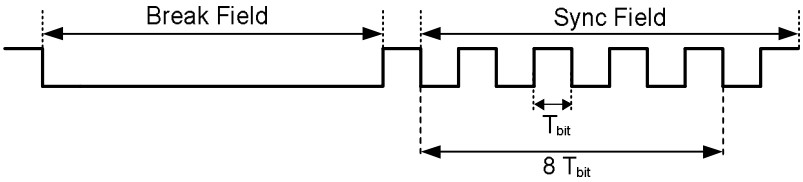

The break field is detected when 12 or more consecutive low cycles are sampled and notifies the USART that it is about to receive the synchronization field. After the break field, when the Start bit of the synchronization field is detected, a counter running at the peripheral clock speed is started. The counter is then incremented for the next eight T_{bit} of the synchronization field. When all eight bits are sampled, the counter is stopped. The resulting counter value is in effect the new BAUD register value.

When the USART Receive mode is set to GENAUTO (the RXMODE bits in the USARTn.CTRLB register), the Generic Auto-Baud mode is enabled. In this mode, one can set the Wait For Break (WFB) bit in the USARTn.STATUS register to enable detection of a break field of any length (that is, also shorter than 12 cycles). This makes it possible to set an arbitrary new baud rate without knowing the current baud rate. If the measured sync field results in a valid BAUD value (0x0064 - 0xFFFF), the BAUD register is updated.

When USART Receive mode is set to LINAUTO mode (the RXMODE bits in the USARTn.CTRLB register), it follows the LIN format. The WFB functionality of the Generic Auto-Baud mode is not compatible with the LIN Constrained Auto-Baud mode. This means that the received signal must be low for 12 peripheral clock cycles or more for a break field to be valid. When a break field has been detected, the USART expects the following synchronization field character to be 0x55. If the received synchronization field character is not 0x55, the Inconsistent Sync Field Error Flag (the ISFIF bit in the USARTn.STATUS register) is set, and the baud rate is unchanged.

22.3.3.2.6 Half Duplex Operation

Half duplex is a type of communication where two or more devices may communicate with each other, but only one at a time. The USART can be configured to operate in the following half duplex modes:

- One-Wire mode
- RS-485 mode

One-Wire Mode

One-Wire mode is enabled by setting the Loop-Back Mode Enable (LBME) bit in the USARTn.CTRLA register. This will enable an internal connection between the TXD pin and the USART receiver, making the TXD pin a combined TxD/RxD line. The RXD pin will be disconnected from the USART receiver and may be controlled by a different peripheral.

In One-Wire mode, multiple devices are able to manipulate the TxD/RxD line at the same time. In the case where one device drives the pin to a logical high level (V_{CC}), and another device pulls the line low (GND), a short will occur. To accommodate this, the USART features an Open-Drain mode (the ODME bit in the USARTn.CTRLB register) which prevents the transmitter from driving a pin to a logical high level, thereby constraining it to only be able to pull it low. Combining this function with the internal pull-up feature (the PULLUPEN bit in the PORTx.PINnCTRL register) will let the line be held high through a pull-up resistor, allowing any device to pull it low. When the line is pulled low the current from V_{CC} to GND will be limited by the pull-up resistor. The TXD pin is automatically set to output by hardware when the Open-Drain mode is enabled.

When the USART is transmitting to the TxD/RxD line, it will also receive its own transmission. This can be used to check for overlapping transmissions by checking if the received data are the same as the transmitted data as it should be.

RS-485 Mode

RS-485 is a communication standard supported by the USART peripheral. It is a physical interface that defines the setup of a communication circuit. Data are transmitted using differential signaling, making communication robust against noise. RS-485 is enabled by writing to the RS485 bit field (USARTn.CTRLA).

The RS-485 mode supports external line driver devices that convert a single USART transmission into corresponding differential pair signals. Writing RS485[0] to '1' enables the automatic control of the XDIR pin that can be used to enable transmission or reception for the line driver device. The USART automatically drives the XDIR pin high while the USART is transmitting and pulls it low when the transmission is complete. An example of such a circuit is shown in the figure below.

Figure 22-10. RS-485 Bus Connection

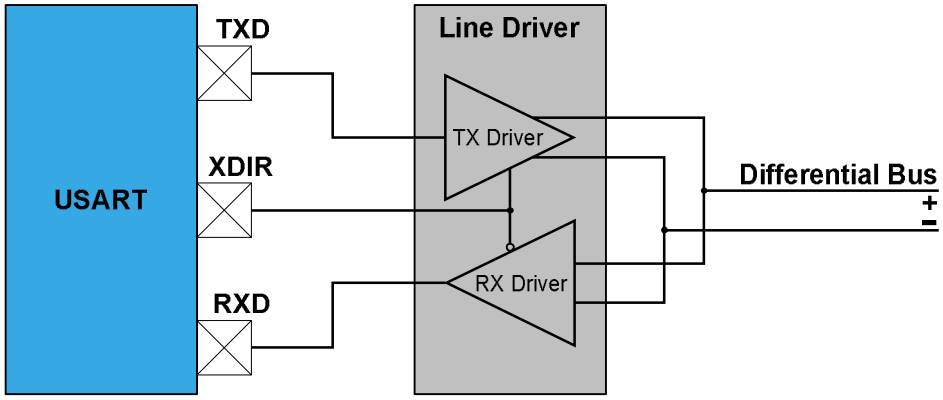

The XDIR pin goes high one baud clock cycle in advance of data being shifted out to allow some guard time to enable the external line driver. The XDIR pin will remain high for the complete frame including Stop bit(s).

Figure 22-11. XDIR Drive Timing

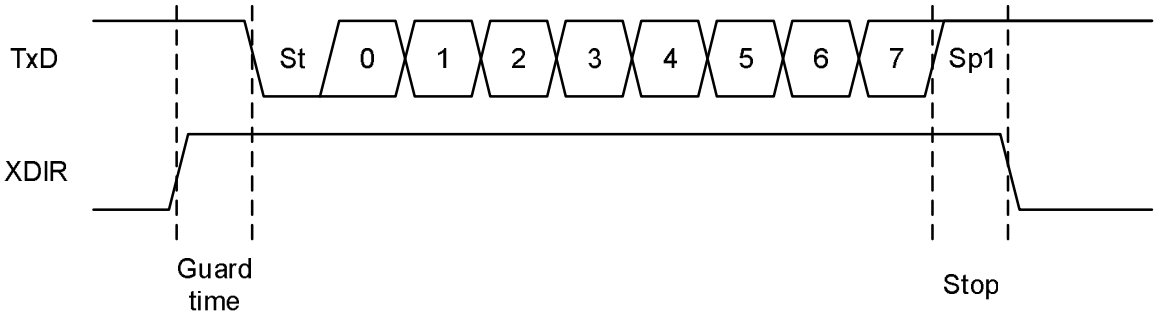

Writing RS485[1] to '1' enables the RS-485 mode which automatically sets the TXD pin to output one clock cycle before starting transmission and sets it back to input when the transmission is complete.

RS-485 mode is compatible with One-Wire mode. One-Wire mode enables an internal connection between the TXD pin and the USART receiver, making the TXD pin a combined TxD/RxD line. The RXD pin will be disconnected from the USART receiver and may be controlled by a different peripheral. An example of such a circuit is shown in the figure below.

Figure 22-12. RS-485 with Loop-Back Mode Connection

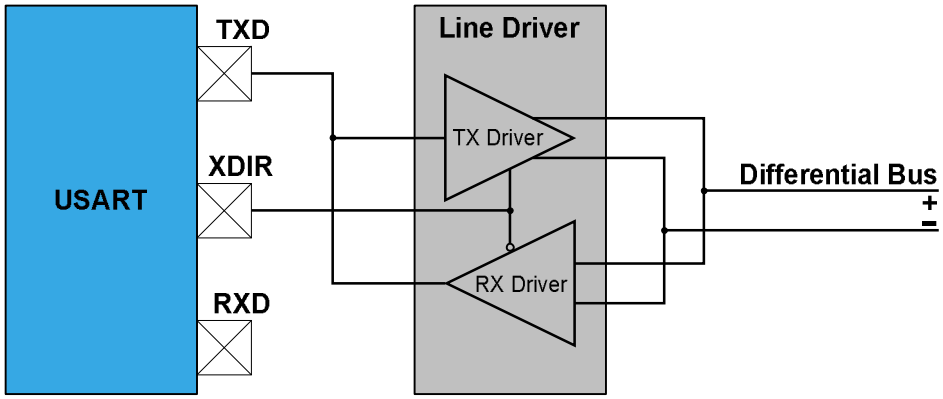

22.3.3.2.7 IRCOM Mode of Operation

The USART peripheral can be configured in Infrared Communication mode (IRCOM) which is IrDA® 1.4 compatible with baud rates up to 115.2 kbps. When enabled, the IRCOM mode enables infrared pulse encoding/decoding for the USART.

Figure 22-13. Block Diagram

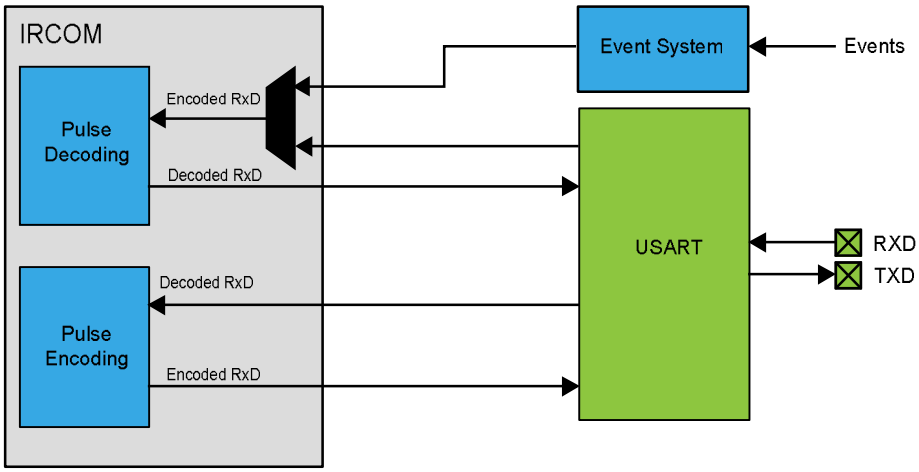

The USART is set in IRCOM mode by writing 0x02 to the CMODE bits in the USARTn.CTRLC register. The data on the TXD/RXD pins are the inverted values of the transmitted/received infrared pulse. It is also possible to select an event channel from the Event System as an input for the IRCOM receiver. This enables the IRCOM to receive input from the I/O pins or sources other than the corresponding RXD pin. This will disable the RxD input from the USART pin.

For transmission, three pulse modulation schemes are available:

- 3/16 of the baud rate period
- Fixed programmable pulse time based on the peripheral clock frequency
- Pulse modulation disabled

For the reception, a fixed programmable minimum high-level pulse-width for the pulse to be decoded as a logical '0' is used. Shorter pulses will then be discarded, and the bit will be decoded to logical '1' as if no pulse was received.

When IRCOM mode is enabled, Double-Speed mode cannot be used for the USART.

22.3.4 Additional Features

22.3.4.1 Parity

Parity bits can be used by the USART to check the validity of a data frame. The Parity bit is set by the transmitter based on the number of bits with the value of '1' in a transmission and controlled by the receiver upon reception. If

the Parity bit is inconsistent with the transmission frame, the receiver may assume that the data frame has been corrupted.

Even or odd parity can be selected for error checking by writing the Parity Mode (PMODE) bits in the USARTn.CTRLC register. If even parity is selected, the Parity bit is set to '1' if the number of Data bits with value '1' is odd (making the total number of bits with value '1' even). If odd parity is selected, the Parity bit is set to '1' if the number of data bits with value '1' is even (making the total number of bits with value '1' odd).

When enabled, the parity checker calculates the parity of the data bits in incoming frames and compares the result with the Parity bit of the corresponding frame. If a parity error is detected, the Parity Error flag (the PERR bit in the USARTn.RXDATAH register) is set.

If LIN Constrained Auto-Baud mode is enabled (RXMODE = 0x03 in the USARTn.CTRLB register), a parity check is only performed on the protected identifier field. A parity error is detected if one of the equations below is not true, which sets the Parity Error flag.

$$P0 = ID0 \text{ XOR } ID1 \text{ XOR } ID2 \text{ XOR } ID4$$

$$P1 = \text{ NOT } \left(ID1 \text{ XOR } ID3 \text{ XOR } ID4 \text{ XOR } ID5\right)$$

Figure 22-14. Protected Identifier Field and Mapping of Identifier and Parity Bits

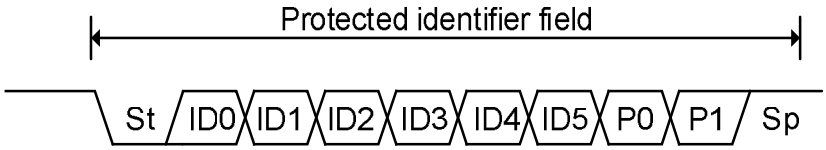

22.3.4.2 Start-of-Frame Detection

The Start-of-Frame Detection feature enables the USART to wake up from Standby Sleep mode upon data reception.

When a high-to-low transition is detected on the RXD pin, the oscillator is powered up, and the USART peripheral clock is enabled. After start-up, the rest of the data frame can be received, provided that the baud rate is slow enough in relation to the oscillator start-up time. The start-up time of the oscillators varies with supply voltage and temperature. For details on oscillator start-up time characteristics, refer to the *Electrical Characteristics* section.

If a false Start bit is detected, the device will, if another wake-up source has not been triggered, go back into the Standby Sleep mode.

The Start-of-Frame detection works in Asynchronous mode only. It is enabled by writing the Start-of-Frame Detection Enable (SFDEN) bit in the USARTn.CTRLB register. If a Start bit is detected while the device is in Standby Sleep mode, the USART Receive Start Interrupt Flag (RXSIF) bit is set.

The USART Receive Complete Interrupt Flag (RXCIF) bit and the RXSIF bit share the same interrupt line, but each has its dedicated interrupt settings. The table below shows the USART Start Frame Detection modes, depending on the interrupt setting.

Table 22-6. USART Start Frame Detection Modes

SFDEN	RXSIF Interrupt	RXCIF Interrupt	Comment
0	x	x	Standard mode.
1	Disabled	Disabled	Only the oscillator is powered during the frame reception. If the interrupts are disabled and buffer overflow is ignored, all incoming frames will be lost.
1	Disabled	Enabled	System/all clocks are awakened on Receive Complete interrupt.
1	Enabled	x	System/all clocks are awakened when a Start bit is detected.

Note: The `SLEEP` instruction will not shut down the oscillator if there is ongoing communication.

22.3.4.3 Multiprocessor Communication

The Multiprocessor Communication mode (MPCM) effectively reduces the number of incoming frames that have to be handled by the receiver in a system with multiple microcontrollers communicating via the same serial bus. This

mode is enabled by writing a '1' to the MPCM bit in the Control B register (USARTn.CTRLB). In this mode, a dedicated bit in the frames is used to indicate whether the frame is an address or data frame type.

If the receiver is set up to receive frames that contain five to eight data bits, the first Stop bit is used to indicate the frame type. If the receiver is set up for frames with nine data bits, the ninth bit is used to indicate frame type. When the frame type bit is '1', the frame contains an address. When the frame type bit is '0', the frame is a data frame. If 5- to 8-bit character frames are used, the transmitter must be set to use two Stop bits, since the first Stop bit is used for indicating the frame type.

If a particular slave MCU has been addressed, it will receive the following data frames as usual, while the other slave MCUs will ignore the frames until another address frame is received.

22.3.4.3.1 Using Multiprocessor Communication

The following procedure should be used to exchange data in Multiprocessor Communication mode (MPCM):

1. All slave MCUs are in Multiprocessor Communication mode.
2. The master MCU sends an address frame, and all slaves receive and read this frame.
3. Each slave MCU determines if it has been selected.
4. The addressed MCU will disable MPCM and receive all data frames. The other slave MCUs will ignore the data frames.
5. When the addressed MCU has received the last data frame, it must enable MPCM again and wait for a new address frame from the master.

The process then repeats from step 2.

22.3.5 Events

The USART can generate the events described in the table below.

Table 22-7. Event Generators in USART

Generator Name		Description	Event Type	Generating Clock Domain	Length of Event
Peripheral	Event				
USARTn	XCK	The clock signal in SPI Master mode and Synchronous USART Master mode	Pulse	CLK_PER	One XCK period

The table below describes the event user and its associated functionality.

Table 22-8. Event Users in USART

User Name		Description	Input Detection	Async/Sync
Peripheral	Input			
USARTn	IREI	USARTn IrDA event input	Pulse	Sync

22.3.6 Interrupts

Table 22-9. Available Interrupt Vectors and Sources

Name	Vector Description	Conditions
RXC	Receive Complete interrupt	• There is unread data in the receive buffer (RXCIE) • Receive of Start-of-Frame detected (RXSIE) • Auto-Baud Error/ISFIF flag set (ABEIE)
DRE	Data Register Empty interrupt	The transmit buffer is empty/ready to receive new data (DREIE)
TXC	Transmit Complete interrupt	The entire frame in the Transmit Shift register has been shifted out and there are no new data in the transmit buffer (TXCIE)

When an Interrupt condition occurs, the corresponding Interrupt flag is set in the STATUS register (USARTn.STATUS).

An interrupt source is enabled or disabled by writing to the corresponding bit in the Control A register (USARTn.CTRLA).

An interrupt request is generated when the corresponding interrupt source is enabled, and the Interrupt flag is set. The interrupt request remains active until the Interrupt flag is cleared. See the USARTn.STATUS register for details on how to clear Interrupt flags.

22.4 Register Summary - USARTn

Offset	Name	Bit Pos.								
0x00	RXDATAL	7:0	DATA[7:0]							
0x01	RXDATAH	7:0	RXCIF	BUFOVF				FERR	PERR	DATA[8]
0x02	TXDATAL	7:0	DATA[7:0]							
0x03	TXDATAH	7:0								DATA[8]
0x04	STATUS	7:0	RXCIF	TXCIF	DREIF	RXSIF	ISFIF		BDF	WFB
0x05	CTRLA	7:0	RXCIE	TXCIE	DREIE	RXSIE	LBME	ABEIE	RS485[1:0]	
0x06	CTRLB	7:0	RXEN	TXEN		SFDEN	ODME	RXMODE[1:0]		MPCM
0x07	CTRLC	7:0	CMODE[1:0]		PMODE[1:0]		SBMODE	CHSIZE[2:0]		
0x07	CTRLC	7:0	CMODE[1:0]					UDORD	UCPHA	
0x08	BAUD	7:0	BAUD[7:0]							
		15:8	BAUD[15:8]							
0x0A	CTRLD	7:0	ABW[1:0]							
0x0B	DBGCTRL	7:0								DBGRUN
0x0C	EVCTRL	7:0								IREI
0x0D	TXPLCTRL	7:0	TXPL[7:0]							
0x0E	RXPLCTRL	7:0		RXPL[6:0]						

22.5 Register Description

22.5.1 Receiver Data Register Low Byte

Name: RXDATAL
Offset: 0x00
Reset: 0x00
Property: -

Reading the USARTn.RXDATAL register will return the contents of the eight least significant RXDATA bits.
The receive buffer consists of a two-level buffer. The data buffer and the corresponding flags in the high byte of RXDATA will change state whenever the receive buffer is accessed (read). If the CHSIZE bits in the USARTn.CTRLC register are set to 9BIT Low byte first, read the USARTn.RXDATAL register before the USARTn.RXDATAH register. Otherwise, always read the USARTn.RXDATAH register before the USARTn.RXDATAL register in order to get the correct flags.

Bit	7	6	5	4	3	2	1	0
	DATA[7:0]							
Access	R	R	R	R	R	R	R	R
Reset	0	0	0	0	0	0	0	0

Bits 7:0 – DATA[7:0] Receiver Data Register

22.5.2 Receiver Data Register High Byte

Name: RXDATAH
Offset: 0x01
Reset: 0x00
Property: -

Reading the USARTn.RXDATAH register location will return the contents of the ninth RXDATA bit plus Status bits.

The receive buffer consists of a two-level buffer. The data buffer and the corresponding flags in the high byte of USARTn.RXDATAH will change state whenever the receive buffer is accessed (read). If the CHSIZE bits in the USARTn.CTRLC register are set to 9BIT Low byte first, read the USARTn.RXDATAL register before the USARTn.RXDATAH register. Otherwise, always read the USARTn.RXDATAH register before the USARTn.RXDATAL register in order to get the correct flags.

Bit	7	6	5	4	3	2	1	0
	RXCIF	BUFOVF				FERR	PERR	DATA[8]
Access	R	R				R	R	R
Reset	0	0				0	0	0

Bit 7 – RXCIF USART Receive Complete Interrupt Flag
This flag is set when there are unread data in the receive buffer and cleared when the receive buffer is empty (that is, does not contain any unread data). When the receiver is disabled the receive buffer will be flushed and, consequently, the RXCIF bit will become '0'.

Bit 6 – BUFOVF Buffer Overflow
The BUFOVF flag indicates data loss due to a "receiver buffer full" condition. This flag is set if a Buffer Overflow condition is detected. A buffer overflow occurs when the receive buffer is full (two characters), it is a new character waiting in the Receive Shift register, and a new Start bit is detected. This flag is valid until the receive buffer (USARTn.RXDATAL) is read.
This flag is not used in Master SPI mode of operation.

Bit 2 – FERR Frame Error
The FERR flag indicates the state of the first Stop bit of the next readable frame stored in the receive buffer. This bit is set if the received character had a frame error, that is, when the first Stop bit was '0' and cleared when the Stop bit of the received data is '1'. This bit is valid until the receive buffer (USARTn.RXDATAL) is read. The FERR bit is not affected by the SBMODE bit in the USARTn.CTRLC register since the receiver ignores all, except for the first Stop bit.
This flag is not used in Master SPI mode of operation.

Bit 1 – PERR Parity Error
If parity checking is enabled and the next character in the receive buffer has a parity error, this flag is set. If parity check is not enabled the PERR bit will always be read as '0'. This bit is valid until the receive buffer (USARTn.RXDATAL) is read. For details on parity calculation refer to 22.3.4.1 Parity. If USART is set to LINAUTO mode, this bit will be a parity check of the protected identifier field and will be valid when the DATA[8] bit in the USARTn.RXDATAH register reads low.
This flag is not used in Master SPI mode of operation.

Bit 0 – DATA[8] Receiver Data Register
When the USART receiver is configured to LINAUTO mode, this bit indicates if the received data are within the response space of a LIN frame. If the received data are in the protected identifier field, this bit will be read as '0'. Otherwise, the bit will be read as '1'. For a receiver mode other than LINAUTO mode, the DATA[8] bit holds the ninth data bit in the received character when operating with serial frames with nine data bits.

22.5.3 Transmit Data Register Low Byte

Name: TXDATAL
Offset: 0x02
Reset: 0x00
Property: -

The Transmit Data Buffer (TXB) register will be the destination for data written to the USARTn.TXDATAL register location.

For 5-, 6-, or 7-bit characters the upper, unused bits will be ignored by the transmitter and set to zero by the receiver.

The transmit buffer can only be written when the DREIF flag in the USARTn.STATUS register is set. Data written to the DATA bits when the DREIF flag is not set will be ignored by the USART transmitter. When data are written to the transmit buffer, and the transmitter is enabled, the transmitter will load the data into the Transmit Shift register when the Shift register is empty. The data are then transmitted on the TXD pin.

Bit	7	6	5	4	3	2	1	0
	DATA[7:0]							
Access	R/W	R/W	R/W	R/W	R/W	R/W	R/W	R/W
Reset	0	0	0	0	0	0	0	0

Bits 7:0 – DATA[7:0] Transmit Data Register

22.5.4 Transmit Data Register High Byte

Name: TXDATAH
Offset: 0x03
Reset: 0x00
Property: -

The USARTn.TXDATAH register holds the ninth data bit in the character to be transmitted when operating with serial frames with nine data bits. When used, this bit must be written before writing to the USARTn.TXDATAL register except if the CHSIZE bits in the USARTn.CTRLC register are is set to 9BIT low byte first, where the USARTn.TXDATAL register should be written first.
This bit is unused in Master SPI mode of operation.

Bit	7	6	5	4	3	2	1	0
								DATA[8]
Access								W
Reset								0

Bit 0 – DATA[8] Transmit Data Register
This bit is used when CHSIZE=9BIT in the USARTn.CTRLC register.

22.5.5 USART Status Register

Name: STATUS
Offset: 0x04
Reset: 0x00
Property: -

Bit	7	6	5	4	3	2	1	0
	RXCIF	TXCIF	DREIF	RXSIF	ISFIF		BDF	WFB
Access	R	R/W	R	R/W	R/W		R/W	R/W
Reset	0	0	1	0	0		0	0

Bit 7 – RXCIF USART Receive Complete Interrupt Flag
This flag is set to '1' when there are unread data in the receive buffer and cleared when the receive buffer is empty (that is, does not contain any unread data). When the receiver is disabled the receive buffer will be flushed and, consequently, the RXCIF bit will become '0'.
When interrupt-driven data reception is used, the receive complete interrupt routine must read the received data from RXDATA in order to clear the RXCIF. If not, a new interrupt will occur directly after the return from the current interrupt.

Bit 6 – TXCIF USART Transmit Complete Interrupt Flag
This flag is set when the entire frame in the Transmit Shift register has been shifted out, and there are no new data in the transmit buffer (TXDATA).
This flag is automatically cleared when the transmit complete interrupt vector is executed. The flag can also be cleared by writing a '1' to its bit location.

Bit 5 – DREIF USART Data Register Empty Flag
This flag indicates if the transmit buffer (TXDATA) is ready to receive new data. The flag is set to '1' when the transmit buffer is empty and is '0' when the transmit buffer contains data to be transmitted but has not yet been moved into the Shift register. The DREIF bit is set after a Reset to indicate that the transmitter is ready. Always write this bit to '0' when writing the STATUS register.
DREIF is cleared to '0' by writing TXDATAL. When interrupt-driven data transmission is used, the Data Register Empty interrupt routine must either write new data to TXDATA in order to clear DREIF or disable the Data Register Empty interrupt. If not, a new interrupt will occur directly after the return from the current interrupt.

Bit 4 – RXSIF USART Receive Start Interrupt Flag
This flag indicates a valid Start condition on the RxD line. The flag is set when the system is in Standby Sleep mode and a high (IDLE) to low (START) valid transition is detected on the RxD line. If the start detection is not enabled, the RXSIF bit will always read '0'. This flag can only be cleared by writing a '1' to its bit location. This flag is not used in the Master SPI mode operation.

Bit 3 – ISFIF Inconsistent Sync Field Interrupt Flag
This flag is set when the auto-baud is enabled and the Sync Field bit time is too fast or too slow to give a valid baud setting. It will also be set when USART is set to LINAUTO mode, and the SYNC character differ from data value 0x55.
Writing a '1' to this bit will clear the flag and bring the USART back to Idle state.

Bit 1 – BDF Break Detected Flag
This flag is intended for USART configured to LINAUTO Receive mode. The break detector has a fixed threshold of 11 bits low for a break to be detected. The BDF bit is set after a valid break and sync character is detected. The bit is automatically cleared when the next data are received. The bit will behave identically when the USART is set to GENAUTO mode. In NORMAL or CLK2X Receive mode, the BDF bit is unused.
This bit is cleared by writing a '1' to it.

Bit 0 – WFB Wait For Break
Writing this bit to '1' will register the next low and high transition on the RxD line as a break character. This can be used to wait for a break character of arbitrary width. Combined with USART set to GENAUTO mode, this allows the user to set any BAUD rate through BREAK and SYNC as long as it falls within the valid range of the USARTn.BAUD register. This bit will always read '0'.

22.5.6 Control A

Name: CTRLA
Offset: 0x05
Reset: 0x00
Property: -

Bit	7	6	5	4	3	2	1	0
	RXCIE	TXCIE	DREIE	RXSIE	LBME	ABEIE	RS485[1:0]	
Access	R/W	R/W	R/W	R/W	R/W	R/W	R/W	R/W
Reset	0	0	0	0	0	0	0	0

Bit 7 – RXCIE Receive Complete Interrupt Enable
This bit enables the Receive Complete interrupt (interrupt vector RXC). The enabled interrupt will be triggered when the RXCIF bit in the USARTn.STATUS register is set.

Bit 6 – TXCIE Transmit Complete Interrupt Enable
This bit enables the Transmit Complete interrupt (interrupt vector TXC). The enabled interrupt will be triggered when the TXCIF bit in the USARTn.STATUS register is set.

Bit 5 – DREIE Data Register Empty Interrupt Enable
This bit enables the Data Register Empty interrupt (interrupt vector DRE). The enabled interrupt will be triggered when the DREIF bit in the USART.STATUS register is set.

Bit 4 – RXSIE Receiver Start Frame Interrupt Enable
Writing a '1' to this bit enables the Start Frame Detector to generate an interrupt on interrupt vector RXC when a Start-of-Frame condition is detected.

Bit 3 – LBME Loop-back Mode Enable
Writing a '1' to this bit enables an internal connection between the TXD pin and the USART receiver and disables input from the RXD pin to the USART receiver.

Bit 2 – ABEIE Auto-baud Error Interrupt Enable
Writing a '1' to this bit enables the auto-baud error interrupt on interrupt vector RXC. The enabled interrupt will trigger for conditions where the ISFIF flag is set.

Bits 1:0 – RS485[1:0] RS-485 Mode
These bits enable the RS-485 and select the operation mode. Writing RS485[0] to '1' enables the RS-485 mode which automatically drives the XDIR pin high one clock cycle before starting transmission and pulls it low again when the transmission is complete. Writing RS485[1] to '1' enables the RS-485 mode which automatically sets the TXD pin to output one clock cycle before starting transmission and sets it back to input when the transmission is complete.

22.5.7 Control B

Name: CTRLB
Offset: 0x06
Reset: 0x00
Property: -

Bit	7	6	5	4	3	2	1	0
	RXEN	TXEN		SFDEN	ODME	RXMODE[1:0]		MPCM
Access	R/W	R/W		R/W	R/W	R/W	R/W	R/W
Reset	0	0		0	0	0	0	0

Bit 7 – RXEN Receiver Enable
Writing this bit to '1' enables the USART receiver. Disabling the receiver will flush the receive buffer invalidating the FERR, BUFOVF, and PERR flags. In GENAUTO and LINAUTO mode, disabling the receiver will reset the auto-baud detection logic.

Bit 6 – TXEN Transmitter Enable
Writing this bit to '1' enables the USART transmitter. The transmitter will override normal port operation for the TXD pin when enabled. Disabling the transmitter (writing the TXEN bit to '0') will not become effective until ongoing and pending transmissions are completed (that is, when the Transmit Shift register and Transmit Buffer register does not contain data to be transmitted). When the transmitter is disabled, it will no longer override the TXD pin, and the pin direction is automatically set as input by hardware, even if it was configured as output by the user.

Bit 4 – SFDEN Start-of-Frame Detection Enable
Writing this bit to '1' enables the USART Start-of-Frame Detection mode. The Start-of-Frame detector is able to wake up the system from Idle or Standby Sleep modes when a high (IDLE) to low (START) transition is detected on the RxD line.

Bit 3 – ODME Open Drain Mode Enable
Writing this bit to '1' gives the TXD pin open-drain functionality. Internal Pull-up should be enabled for the TXD pin (the PULLUPEN bit in the PORTx.PINnCTRL register) to prevent the line from floating when a logic '1' is output to the TXD pin.

Bits 2:1 – RXMODE[1:0] Receiver Mode
Writing these bits select the receiver mode of the USART. In the CLK2X mode, the divisor of the baud rate divider will be reduced from 16 to 8 effectively doubling the transfer rate for Asynchronous Communication modes. For synchronous operation, the CLK2X mode has no effect, and the RXMODE bits should always be written to 0x00. RXMODE must be 0x00 when the USART Communication mode is configured to IRCOM. Setting RXMODE to GENAUTO enables generic auto-baud where the SYNC character is valid when eight bits alternating between '0' and '1' have been registered. In this mode, any SYNC character that gives a valid BAUD rate will be accepted. In LINAUTO mode the SYNC character is constrained and found valid if every two bits falls within 32 ±6 baud samples of the internal baud rate and match data value 0x55. The GENAUTO and LINAUTO modes are only supported for USART operated in Asynchronous Slave mode.

Value	Name	Description
0x00	NORMAL	Normal USART mode, standard transmission speed
0x01	CLK2X	Normal USART mode, double transmission speed
0x02	GENAUTO	Generic Auto-Baud mode
0x03	LINAUTO	LIN Constrained Auto-Baud mode

Bit 0 – MPCM Multi-Processor Communication Mode
Writing a '1' to this bit enables the Multi-Processor Communication mode: The USART receiver ignores all incoming frames that do not contain address information. The transmitter is unaffected by the MPCM setting. For more information see 22.3.4.3 Multiprocessor Communication.

22.5.8 Control C - Asynchronous Mode

Name: CTRLC
Offset: 0x07
Reset: 0x03
Property: -

This register description is valid for all modes except the Master SPI mode. When the USART Communication Mode bits (CMODE) in this register are written to 'MSPI', see CTRLC - Master SPI mode for the correct description.

Bit	7	6	5	4	3	2	1	0
	CMODE[1:0]		PMODE[1:0]		SBMODE	CHSIZE[2:0]		
Access	R/W	R/W	R/W	R/W	R/W	R/W	R/W	R/W
Reset	0	0	0	0	0	0	1	1

Bits 7:6 – CMODE[1:0] USART Communication Mode
Writing these bits select the Communication mode of the USART.
Writing a 0x03 to these bits alters the available bit fields in this register, see CTRLC - Master SPI mode.

Value	Name	Description
0x00	ASYNCHRONOUS	Asynchronous USART
0x01	SYNCHRONOUS	Synchronous USART
0x02	IRCOM	Infrared Communication
0x03	MSPI	Master SPI

Bits 5:4 – PMODE[1:0] Parity Mode
Writing these bits enable and select the type of parity generation.
When enabled, the transmitter will automatically generate and send the parity of the transmitted data bits within each frame. The receiver will generate a parity value for the incoming data, compare it to the PMODE setting, and set the Parity Error (PERR) flag in the STATUS (USARTn.STATUS) register if a mismatch is detected.

Value	Name	Description
0x0	DISABLED	Disabled
0x1	-	Reserved
0x2	EVEN	Enabled, even parity
0x3	ODD	Enabled, odd parity

Bit 3 – SBMODE Stop Bit Mode
Writing this bit selects the number of Stop bits to be inserted by the transmitter.
The receiver ignores this setting.

Value	Description
0	1 Stop bit
1	2 Stop bits

Bits 2:0 – CHSIZE[2:0] Character Size
Writing these bits select the number of data bits in a frame. The receiver and transmitter use the same setting. For 9BIT character size, the order of which byte to read or write first, low or high byte of RXDATA or TXDATA, is selectable.

Value	Name	Description
0x00	5BIT	5-bit
0x01	6BIT	6-bit
0x02	7BIT	7-bit
0x03	8BIT	8-bit
0x04	-	Reserved
0x05	-	Reserved
0x06	9BITL	9-bit (Low byte first)
0x07	9BITH	9-bit (High byte first)

22.5.9 Control C - Master SPI Mode

Name: CTRLC
Offset: 0x07
Reset: 0x00
Property: -

This register description is valid only when the USART is in Master SPI mode (CMODE written to MSPI). For other CMODE values, see CTRLC - Asynchronous mode.

See 22.3.3.1.3 USART in Master SPI Mode for a full description of the Master SPI mode operation.

Bit	7	6	5	4	3	2	1	0
	CMODE[1:0]					UDORD	UCPHA	
Access	R/W	R/W				R/W	R/W	
Reset	0	0				0	0	

Bits 7:6 – CMODE[1:0] USART Communication Mode
Writing these bits select the communication mode of the USART.
Writing a value different than `0x03` to these bits alters the available bit fields in this register, see CTRLC - Asynchronous mode.

Value	Name	Description
`0x00`	ASYNCHRONOUS	Asynchronous USART
`0x01`	SYNCHRONOUS	Synchronous USART
`0x02`	IRCOM	Infrared Communication
`0x03`	MSPI	Master SPI

Bit 2 – UDORD USART Data Order
Writing this bit selects the frame format.
The receiver and transmitter use the same setting. Changing the setting of the UDORD bit will corrupt all ongoing communication for both the receiver and the transmitter.

Value	Description
`0`	MSb of the data word is transmitted first
`1`	LSb of the data word is transmitted first

Bit 1 – UCPHA USART Clock Phase
The UCPHA bit setting determines if data are sampled on the leading (first) edge or tailing (last) edge of XCKn. Refer to Clock Generation for details.

22.5.10 Baud Register

Name: BAUD
Offset: 0x08
Reset: 0x00
Property: -

The USARTn.BAUDL and USARTn.BAUDH register pair represents the 16-bit value, USARTn.BAUD. The low byte [7:0] (suffix L) is accessible at the original offset. The high byte [15:8] (suffix H) can be accessed at offset + 0x01.

Ongoing transmissions of the transmitter and receiver will be corrupted if the baud rate is changed. Writing to this register will trigger an immediate update of the baud rate prescaler. For more information on how to set the baud rate, see Table 22-1, Equations for Calculating Baud Rate Register Setting.

Bit	15	14	13	12	11	10	9	8
	BAUD[15:8]							
Access	R/W	R/W	R/W	R/W	R/W	R/W	R/W	R/W
Reset	0	0	0	0	0	0	0	0

Bit	7	6	5	4	3	2	1	0
	BAUD[7:0]							
Access	R/W	R/W	R/W	R/W	R/W	R/W	R/W	R/W
Reset	0	0	0	0	0	0	0	0

Bits 15:8 – BAUD[15:8] USART Baud Rate High Byte
These bits hold the MSB of the 16-bit Baud register.

Bits 7:0 – BAUD[7:0] USART Baud Rate Low Byte
These bits hold the LSB of the 16-bit Baud register.

22.5.11 Control D

Name: CTRLD
Offset: 0x0a
Reset: 0x00
Property: -

Bit	7	6	5	4	3	2	1	0
	ABW[1:0]							
Access	R/W	R/W						
Reset	0	0						

Bits 7:6 – ABW[1:0] Auto-baud Window Size
These bits set the window size for which the SYNC character bits are validated.

Value	Name	Description
0x00	WDW0	18% tolerance
0x01	WDW1	15% tolerance
0x02	WDW2	21% tolerance
0x03	WDW3	25% tolerance

22.5.12 Debug Control Register

Name: DBGCTRL
Offset: 0x0B
Reset: 0x00
Property: -

Bit	7	6	5	4	3	2	1	0
								DBGRUN
Access								R/W
Reset								0

Bit 0 – DBGRUN Debug Run

Value	Description
0	The peripheral is halted in Break Debug mode and ignores events
1	The peripheral will continue to run in Break Debug mode when the CPU is halted

22.5.13 IrDA Control Register

Name: EVCTRL
Offset: 0x0C
Reset: 0x00
Property: -

Bit	7	6	5	4	3	2	1	0
								IREI
Access								R/W
Reset								0

Bit 0 – IREI IrDA Event Input Enable
This bit enables the event source for the IRCOM Receiver. If event input is selected for the IRCOM receiver, the input from the USART's RXD pin is automatically disabled.

22.5.14 IRCOM Transmitter Pulse Length Control Register

Name: TXPLCTRL
Offset: 0x0D
Reset: 0x00
Property: -

Bit	7	6	5	4	3	2	1	0
	TXPL[7:0]							
Access	R/W	R/W	R/W	R/W	R/W	R/W	R/W	R/W
Reset	0	0	0	0	0	0	0	0

Bits 7:0 – TXPL[7:0] Transmitter Pulse Length
This 8-bit value sets the pulse modulation scheme for the transmitter. Setting this register will have effect only if IRCOM mode is selected by the USART, and it must be configured before the USART transmitter is enabled (TXEN).

Value	Description
0x00	3/16 of the baud rate period pulse modulation is used.
0x01-0xFE	Fixed pulse length coding is used. The 8-bit value sets the number of system clock periods for the pulse. The start of the pulse will be synchronized with the rising edge of the baud rate clock.
0xFF	Pulse coding disabled. RX and TX signals pass through the IRCOM module unaltered. This enables other features through the IRCOM module, such as half-duplex USART, loop-back testing, and USART RX input from an event channel.

22.5.15 IRCOM Receiver Pulse Length Control Register

Name: RXPLCTRL
Offset: 0x0E
Reset: 0x00
Property: -

Bit	7	6	5	4	3	2	1	0
		RXPL[6:0]						
Access		R/W	R/W	R/W	R/W	R/W	R/W	R/W
Reset		0	0	0	0	0	0	0

Bits 6:0 – RXPL[6:0] Receiver Pulse Length
This 7-bit value sets the filter coefficient for the IRCOM transceiver. Setting this register will only have effect if IRCOM mode is selected by a USART, and it must be configured before the USART receiver is enabled (RXEN).

Value	Description
0x00	Filtering disabled.
0x01-0x7F	Filtering enabled. The value of RXPL+1 represents the number of samples required for a received pulse to be accepted.

23. SPI - Serial Peripheral Interface

23.1 Features

- Full Duplex, Three-Wire Synchronous Data Transfer
- Master or Slave Operation
- LSb First or MSb First Data Transfer
- Seven Programmable Bit Rates
- End of Transmission Interrupt Flag
- Write Collision Flag Protection
- Wake-up from Idle Mode
- Double-Speed (CK/2) Master SPI Mode

23.2 Overview

The Serial Peripheral Interface (SPI) is a high-speed synchronous data transfer interface using three or four pins. It allows full duplex communication between an AVR device and peripheral devices or between several microcontrollers. The SPI peripheral can be configured as either Master or Slave. The master initiates and controls all data transactions.

The interconnection between master and slave devices with SPI is shown in the block diagram. The system consists of two shift registers and a master clock generator. The SPI master initiates the communication cycle by pulling the desired slave's slave select ($\overline{SS}$) signal low. Master and slave prepare the data to be sent to their respective shift registers, and the master generates the required clock pulses on the SCK line to exchange data. Data is always shifted from master to slave on the master output, slave input (MOSI) line, and from slave to master on the master input, slave output (MISO) line.

23.2.1 Block Diagram

Figure 23-1. SPI Block Diagram

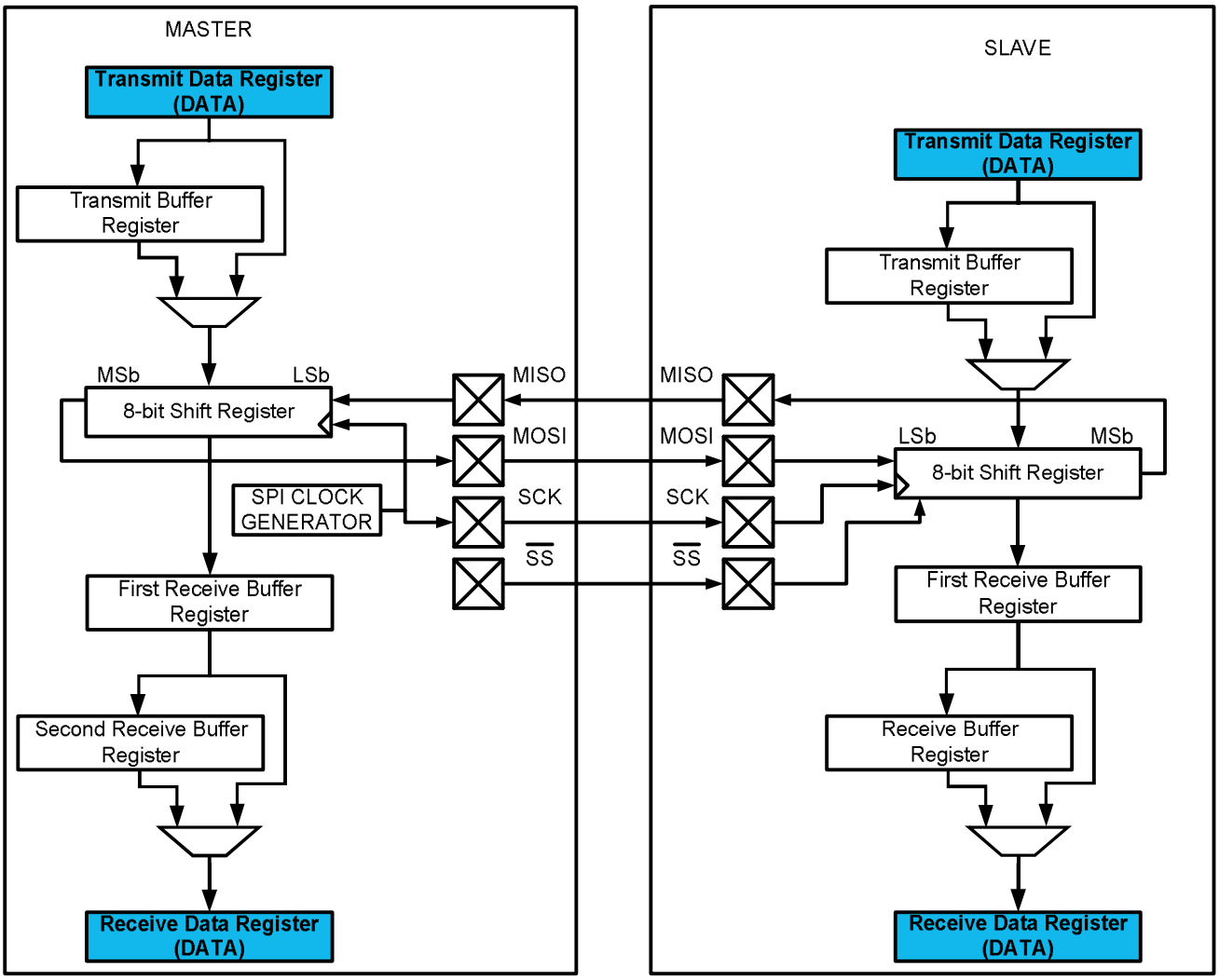

The SPI is built around an 8-bit Shift register that will shift data out and in at the same time. The Transmit Data register and the Receive Data register are not physical registers but are mapped to other registers when written or read: Writing the Transmit Data register (SPIn.DATA) will write the Shift register in Normal mode and the Transmit Buffer register in Buffer mode. Reading the Receive Data register (SPIn.DATA) will read the First Receive Buffer register in normal mode and the Second Receive Data register in Buffer mode.

In Master mode, the SPI has a clock generator to generate the SCK clock. In Slave mode, the received SCK clock is synchronized and sampled to trigger the shifting of data in the Shift register.

23.2.2 Signal Description

Table 23-1. Signals in Master and Slave Mode

Signal	Description	Pin Configuration	
		Master Mode	Slave Mode
MOSI	Master Out Slave In	User defined	Input
MISO	Master In Slave Out	Input	User defined
SCK	Slave clock	User defined	Input

.....continued

Signal	Description	Pin Configuration	
		Master Mode	Slave Mode
$\overline{SS}$	Slave select	User defined	Input

When the SPI module is enabled, the data direction of the MOSI, MISO, SCK, and $\overline{SS}$ pins is overridden according to Table 23-1.

The data direction of the pins with "User defined" pin configuration is not controlled by the SPI: The data direction is controlled by the application software configuring the port peripheral. If these pins are configured with data direction as input, they can be used as regular I/O pin inputs. If these pins are configured with data direction as output, their output value is controlled by the SPI. The MISO pin has a special behavior: When the SPI is in Slave mode and the MISO pin is configured as an output, the $\overline{SS}$ pin controls the output buffer of the pin: If $\overline{SS}$ is low, the output buffer drives the pin, if $\overline{SS}$ is high, the pin is tri-stated.

The data direction of the pins with "Input" pin configuration is controlled by the SPI hardware.

23.3 Functional Description

23.3.1 Initialization

Initialize the SPI to a basic functional state by following these steps:

1. Configure the $\overline{SS}$ pin in the port peripheral.
2. Select SPI Master/Slave operation by writing the Master/Slave Select bit (MASTER) in the Control A register (SPIn.CTRLA).
3. In Master mode, select the clock speed by writing the Prescaler bits (PRESC) and the Clock Double bit (CLK2X) in SPIn.CTRLA.
4. Optional: Select the Data Transfer mode by writing to the MODE bits in the Control B register (SPIn.CTRLB).
5. Optional: Write the Data Order bit (DORD) in SPIn.CTRLA.
6. Optional: Setup Buffer mode by writing BUFEN and BUFWR bits in the Control B register (SPIn.CTRLB).
7. Optional: To disable the multi-master support in Master mode, write ‘1’ to the Slave Select Disable bit (SSD) in SPIn.CTRLB.
8. Enable the SPI by writing a ‘1’ to the ENABLE bit in SPIn.CTRLA.

23.3.2 Operation

23.3.2.1 Master Mode Operation

When the SPI is configured in Master mode, a write to the SPIn.DATA register will start a new transfer. The SPI clock generator starts and the hardware shifts the eight bits into the selected slave. After the byte is shifted out the interrupt flag is set (IF flag in SPIn.INTFLAGS). The SPI master can operate in two modes, Normal and Buffered, as explained below.

23.3.2.1.1 $\overline{SS}$ Pin Functionality in Master Mode - Multi-Master Support

In Master mode, the Slave Select Disable bit in Control Register B (SSD bit in SPIn.CTRLB) controls how the SPI uses the $\overline{SS}$ line.

- If SSD in SPIn.CTRLB is ‘0’, the SPI can use the $\overline{SS}$ pin to transition from Master to Slave mode. This allows multiple SPI masters on the same SPI bus.
- If SSD in SPIn.CTRLB is ‘1’, the SPI does not use the $\overline{SS}$ pin, and it can be used as a regular I/O pin, or by other peripheral modules.

If SSD in SPIn.CTRLB is ‘0’ and the $\overline{SS}$ is configured as an output pin, it can be used as a regular I/O pin or by other peripheral modules, and will not affect the SPI system.

If the SSD bit in SPIn.CTRLB is ‘0’ and the $\overline{SS}$ is configured as an input pin, the $\overline{SS}$ pin must be held high to ensure master SPI operation. A low level will be interpreted as another master is trying to take control of the bus. This will switch the SPI into Slave mode and the hardware of the SPI will perform the following actions:

1. The master bit in the SPI Control A Register (MASTER in SPIn.CTRLA) is cleared and the SPI system becomes a slave. The direction of the pins will be switched according to Table 23-2.
2. The interrupt flag in the Interrupt Flags register (IF in SPIn.INTFLAGS) will be set. If the interrupt is enabled and the global interrupts are enabled the interrupt routine will be executed.

Table 23-2. Overview of the $\overline{SS}$ Pin Functionality when the SSD Bit in SPIn.CTRLB is Zero

$\overline{SS}$ Configuration	$\overline{SS}$ Pin-Level	Description
Input	High	Master activated (selected)
	Low	Master deactivated, switched to Slave mode
Output	High	Master activated (selected)
	Low	

Note:
If the AVR device is configured for Master mode and it cannot be ensured that the $\overline{SS}$ pin will stay high between two transmissions, the status of the Master bit (the MASTER bit in SPIn.CTRLA) has to be checked before a new byte is written. After the Master bit has been cleared by a low level on the $\overline{SS}$ line, it must be set by the application to re-enable the SPI Master mode.

23.3.2.1.2 Normal Mode

In Normal mode, the system is single-buffered in the transmit direction and double-buffered in the receive direction. This influences the data handling in the following ways:

1. New bytes to be sent cannot be written to the Data register (SPIn.DATA) before the entire transfer has completed. A premature write will cause corruption of the transmitted data, and the hardware will set the Write Collision Flag (WRCOL in SPIn.INTFLAGS).
2. Received bytes are written to the First Receive Buffer register immediately after the transmission is completed.
3. The First Receive Buffer register has to be read before the next transmission is completed or data will be lost. This register is read by reading SPIn.DATA.
4. The Transmit Buffer register and Second Receive Buffer register are not used in Normal mode.

After a transfer has completed, the Interrupt Flag will be set in the Interrupt Flags register (IF in SPI.INTFLAGS). This will cause the corresponding interrupt to be executed if this interrupt and the global interrupts are enabled. Setting the Interrupt Enable (IE) bit in the Interrupt Control register (SPIn.INTCTRL) will enable the interrupt.

23.3.2.1.3 Buffer Mode

The Buffer mode is enabled by setting the BUFEN bit in SPIn.CTRLB. The BUFWR bit in SPIn.CTRLB has no effect in Master mode. In Buffer mode, the system is double-buffered in the transmit direction and triple-buffered in the receive direction. This influences the data handling the following ways:

1. New bytes to be sent can be written to the Data register (SPIn.DATA) as long as the Data Register Empty Interrupt Flag (DREIF) in the Interrupt Flag Register (SPIn.INTFLAGS) is set. The first write will be transmitted right away and the following write will go to the Transmit Buffer register.
2. A received byte is placed in a two-entry RX FIFO comprised of the First and Second Receive Buffer registers immediately after the transmission is completed.
3. The Data register is used to read from the RX FIFO. The RX FIFO must be read at least every second transfer to avoid any loss of data.

If both the Shift register and the Transmit Buffer register becomes empty, the Transfer Complete Interrupt Flag (TXCIF) in the Interrupt Flags register (SPIn.INTFLAGS) will be set. This will cause the corresponding interrupt to be executed if this interrupt and the global interrupts are enabled. Setting the Transfer Complete Interrupt Enable (TXCIE) in the Interrupt Control register (SPIn.INTCTRL) enables the Transfer Complete Interrupt.

23.3.2.2 Slave Mode

In Slave mode, the SPI peripheral receives SPI clock and Slave Select from a Master. Slave mode supports three operational modes: One unbuffered mode and two buffered modes. In Slave mode, the control logic will sample the incoming signal on the SCK pin. To ensure correct sampling of this clock signal, the minimum low and high periods must each be longer than two peripheral clock cycles.

23.3.2.2.1 $\overline{SS}$ Pin Functionality in Slave Mode

The Slave Select ($\overline{SS}$) pin plays a central role in the operation of the SPI. Depending on the mode the SPI is in and the configuration of this pin, it can be used to activate or deactivate devices. The $\overline{SS}$ pin is used as a Chip Select pin.

In Slave mode, $\overline{SS}$, MOSI, and SCK are always inputs. The behavior of the MISO pin depends on the configured data direction of the pin in the port peripheral and the value of $\overline{SS}$: When $\overline{SS}$ is driven low, the SPI is activated and will respond to received SCK pulses by clocking data out on MISO if the user has configured the data direction of the MISO pin as an output. When $\overline{SS}$ is driven high the SPI is deactivated, meaning that it will not receive incoming data. If the MISO pin data direction is configured as an output, the MISO pin will be tristated. The following table shows an overview of the $\overline{SS}$ pin functionality.

Table 23-3. Overview of the $\overline{SS}$ Pin Functionality

$\overline{SS}$ Configuration	$\overline{SS}$ Pin-Level	Description	MISO Pin Mode	
			Port Direction = Output	Port Direction = Input
Always Input	High	Slave deactivated (deselected)	Tri-stated	Input
	Low	Slave activated (selected)	Output	Input

Note:
In Slave mode, the SPI state machine will be reset when the $\overline{SS}$ pin is brought high. If the $\overline{SS}$ is brought high during a transmission, the SPI will stop sending and receiving immediately and both data received and data sent must be considered as lost. As the $\overline{SS}$ pin is used to signal the start and end of a transfer, it is useful for achieving packet/byte synchronization, and keeping the Slave bit counter synchronized with the master clock generator.

23.3.2.2.2 Normal Mode

In Normal mode, the SPI peripheral will remain idle as long as the $\overline{SS}$ pin is driven high. In this state, the software may update the contents of the SPIn.DATA register, but the data will not be shifted out by incoming clock pulses on the SCK pin until the $\overline{SS}$ pin is driven low. If $\overline{SS}$ is driven low, the slave will start to shift out data on the first SCK clock pulse. When one byte has been completely shifted, the SPI Interrupt flag (IF) in SPIn.INTFLAGS is set.

The user application may continue placing new data to be sent into the SPIn.DATA register before reading the incoming data. New bytes to be sent cannot be written to SPIn.DATA before the entire transfer has completed. A premature write will be ignored, and the hardware will set the Write Collision Flag (WRCOL in SPIn.INTFLAGS).

When $\overline{SS}$ is driven high, the SPI logic is halted, and the SPI slave will not receive any new data. Any partially received packet in the shift register will be lost.

Figure 23-2. SPI Timing Diagram in Normal Mode (Buffer Mode Not Enabled)

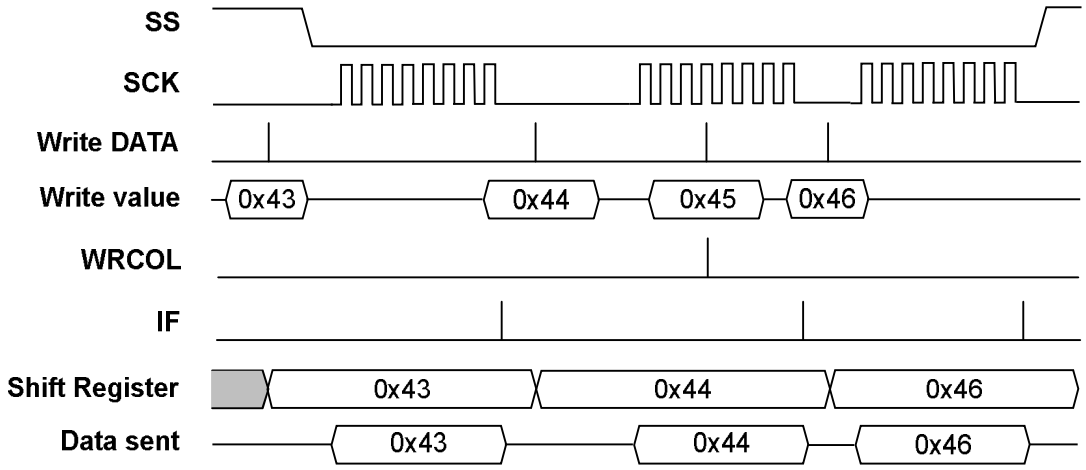

The figure above shows three transfers and one write to the DATA register while the SPI is busy with a transfer. This write will be ignored and the Write Collision Flag (WRCOL in SPIn.INTFLAGS) is set.

23.3.2.2.3 Buffer Mode

To avoid data collisions, the SPI peripheral can be configured in buffered mode by writing a '1' to the Buffer Mode Enable bit in the Control B register (BUFEN in SPIn.CTRLB). In this mode, the SPI has additional interrupt flags and extra buffers. The extra buffers are shown in Figure 23-1. There are two different modes for the Buffer mode, selected with the Buffer mode Wait for Receive bit (BUFWR). The two different modes are described below with timing diagrams.

Figure 23-3. SPI Timing Diagram in Buffer Mode with BUFWR in SPIn.CTRLB Written to '0'

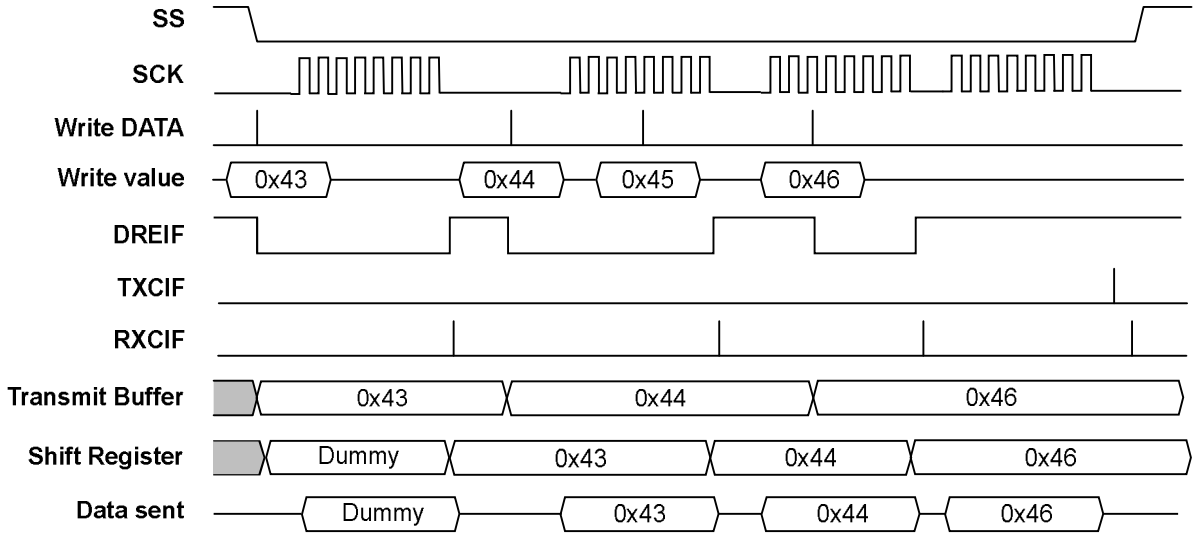

All writes to the Data register goes to the Transmit Buffer register. The figure above shows that the value 0x43 is written to the Data register, but it is not immediately transferred to the shift register so the first byte sent will be a dummy byte. The value of the dummy byte is whatever was in the shift register at the time, usually the last received byte. After the first dummy transfer is completed the value 0x43 is transferred to the Shift register. Then 0x44 is written to the Data register and goes to the Transmit Buffer register. A new transfer is started and 0x43 will be sent. The value 0x45 is written to the Data register, but the Transmit Buffer register is not updated since it is already full containing 0x44 and the Data Register Empty Interrupt Flag (DREIF in SPIn.INTFLAGS) is low. The value 0x45 will be lost. After the transfer, the value 0x44 is moved to the Shift register. During the next transfer, 0x46 is written to the Data register and 0x44 is sent out. After the transfer is complete, 0x46 is copied into the Shift register and sent out in the next transfer.

The Data Register Empty Interrupt Flag (DREIF in SPIn.INTFLAGS) goes low every time the Transmit Buffer register is written and goes high after a transfer when the previous value in the Transmit Buffer register is copied into the Shift register. The Receive Complete Interrupt Flag (RXCIF in SPIn.INTFLAGS) is set one cycle after the Data Register Empty Interrupt Flag goes high. The Transfer Complete Interrupt Flag is set one cycle after the Receive Complete Interrupt Flag is set when both the value in the shift register and the Transmit Buffer register have been sent.

Figure 23-4. SPI Timing Diagram in Buffer Mode with CTRLB.BUFWR Written to '1'

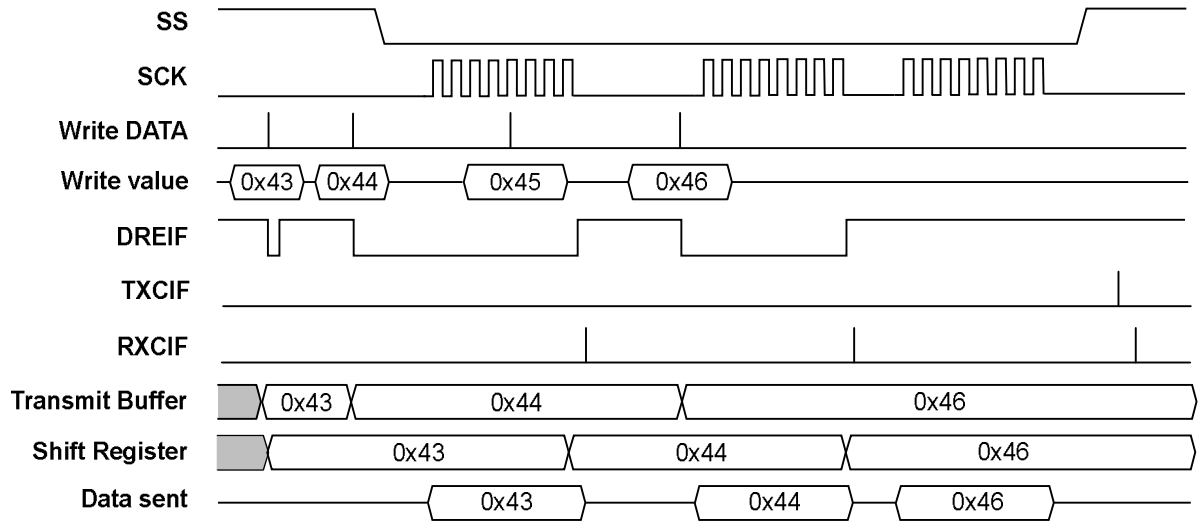

All writes to the Data register goes to the transmit buffer. The figure above shows that the value 0x43 is written to the Data register and since the Slave Select pin is high it is copied to the Shift register the next cycle. Then the next write (0x44) will go to the Transmit Buffer register. During the first transfer, the value 0x43 will be shifted out. In the figure above, the value 0x45 is written to the Data register, but the Transmit Buffer register is not updated since the Data Register Empty Interrupt Flag is low. After the transfer is completed, the value 0x44 from the Transmit Buffer register is copied to the Shift register. The value 0x46 is written to the Transmit Buffer register. During the next two transfers, 0x44 and 0x46 are shifted out. The flags behave the same as with Buffer mode Wait for Receive Bit (BUFWR in SPIn.CTRLB) set to '0'.

23.3.2.3 Data Modes

There are four combinations of SCK phase and polarity with respect to serial data. The desired combination is selected by writing to the MODE bits in the Control B register (SPIn.CTRLB).

The SPI data transfer formats are shown below. Data bits are shifted out and latched in on opposite edges of the SCK signal, ensuring sufficient time for data signals to stabilize.

The leading edge is the first clock edge of a clock cycle. The trailing edge is the last clock edge of a clock cycle.

Figure 23-5. SPI Data Transfer Modes

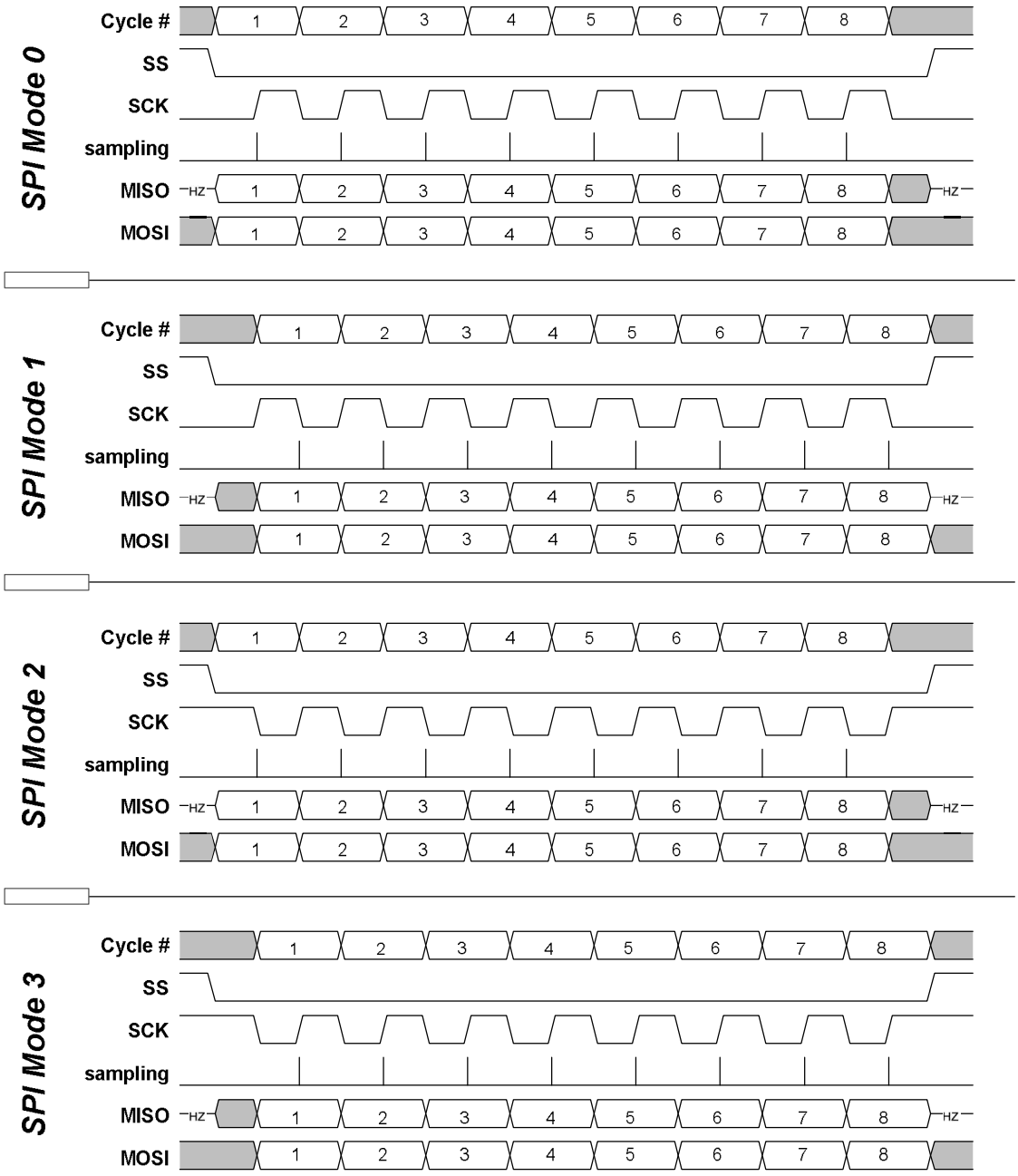

23.3.2.4 Events

The event system output from SPI is SPI SCK value generated by the SPI. The SCK toggles only when the SPI is enabled, in master mode and transmitting. Otherwise, the SCK is not toggling. Refer to the SPI transfer modes as configured in SPIn.CTRLB for the idle state of SCK.

SPI has no event inputs.

23.3.2.5 Interrupts

Table 23-4. Available Interrupt Vectors and Sources

Name	Vector Description	Conditions
SPI	SPI interrupt	• SSI: Slave Select Trigger Interrupt • DRE: Data Register Empty Interrupt • TXC: Transfer Complete Interrupt • RXC: Receive Complete Interrupt

When an interrupt condition occurs, the corresponding interrupt flag is set in the Interrupt Flags register of the peripheral (*peripheral*.INTFLAGS).

An interrupt source is enabled or disabled by writing to the corresponding enable bit in the peripheral's Interrupt Control (*peripheral*.INTCTRL) register.

An interrupt request is generated when the corresponding interrupt source is enabled, and the interrupt flag is set. The interrupt request remains active until the interrupt flag is cleared. See the peripheral's INTFLAGS register for details on how to clear interrupt flags.

23.4 Register Summary - SPIn

Offset	Name	Bit Pos.								
0x00	CTRLA	7:0		DORD	MASTER	CLK2X		PRESC[1:0]		ENABLE
0x01	CTRLB	7:0	BUFEN	BUFWR				SSD	MODE[1:0]	
0x02	INTCTRL	7:0	RXCIE	TXCIE	DREIE	SSIE				IE
0x03	INTFLAGS	7:0	IF	WRCOL						
0x03	INTFLAGS	7:0	RXCIF	TXCIF	DREIF	SSIF				BUFOVF
0x04	DATA	7:0	DATA[7:0]							

23.5 Register Description

23.5.1 Control A

Name: CTRLA
Offset: 0x00
Reset: 0x00
Property: -

Bit	7	6	5	4	3	2	1	0
		DORD	MASTER	CLK2X		PRESC[1:0]		ENABLE
Access		R/W	R/W	R/W		R/W	R/W	R/W
Reset		0	0	0		0	0	0

Bit 6 – DORD Data Order

Value	Description
0	The MSb of the data word is transmitted first
1	The LSb of the data word is transmitted first

Bit 5 – MASTER Master/Slave Select
This bit selects the desired SPI mode.
If $\overline{SS}$ is configured as input and driven low while this bit is '1', this bit is cleared, and the IF flag in SPIn.INTFLAGS is set. The user has to write MASTER=1 again to re-enable SPI Master mode.
This behavior is controlled by the Slave Select Disable bit (SSD) in SPIn.CTRLB.

Value	Description
0	SPI Slave mode selected
1	SPI Master mode selected

Bit 4 – CLK2X Clock Double
When this bit is written to '1' the SPI speed (SCK frequency, after internal prescaler) is doubled in Master mode.

Value	Description
0	SPI speed (SCK frequency) is not doubled
1	SPI speed (SCK frequency) is doubled in Master mode

Bits 2:1 – PRESC[1:0] Prescaler
This bit field controls the SPI clock rate configured in Master mode. These bits have no effect in Slave mode. The relationship between SCK and the peripheral clock frequency (f_{CLK_PER}) is shown below.
The output of the SPI prescaler can be doubled by writing the CLK2X bit to '1'.

Value	Name	Description
0x0	DIV4	CLK_PER/4
0x1	DIV16	CLK_PER/16
0x2	DIV64	CLK_PER/64
0x3	DIV128	CLK_PER/128

Bit 0 – ENABLE SPI Enable

Value	Description
0	SPI is disabled
1	SPI is enabled

23.5.2 Control B

Name: CTRLB
Offset: 0x01
Reset: 0x00
Property: -

Bit	7	6	5	4	3	2	1	0
	BUFEN	BUFWR				SSD	MODE[1:0]	
Access	R/W	R/W				R/W	R/W	R/W
Reset	0	0				0	0	0

Bit 7 – BUFEN Buffer Mode Enable
Writing this bit to '1' enables Buffer mode, meaning two buffers in receive direction, one buffer in transmit direction, and separate interrupt flags for both transmit complete and receive complete.

Bit 6 – BUFWR Buffer Mode Wait for Receive
When writing this bit to '0' the first data transferred will be a dummy sample.

Value	Description
0	One SPI transfer must be completed before the data is copied into the Shift register.
1	When writing to the data register when the SPI is enabled and $\overline{SS}$ is high, the first write will go directly to the Shift register.

Bit 2 – SSD Slave Select Disable
When this bit is set and when operating as SPI Master (MASTER=1 in SPIn.CTRLA), $\overline{SS}$ does not disable Master mode.

Value	Description
0	Enable the Slave Select line when operating as SPI Master
1	Disable the Slave Select line when operating as SPI Master

Bits 1:0 – MODE[1:0] Mode
These bits select the Transfer mode. The four combinations of SCK phase and polarity with respect to the serial data are shown in the table below. These bits decide whether the first edge of a clock cycle (leading edge) is rising or falling and whether data setup and sample occur on the leading or trailing edge. When the leading edge is rising, the SCK signal is low when idle, and when the leading edge is falling, the SCK signal is high when idle.

Value	Name	Description
0x0	0	Leading edge: Rising, sample Trailing edge: Falling, setup
0x1	1	Leading edge: Rising, setup Trailing edge: Falling, sample
0x2	2	Leading edge: Falling, sample Trailing edge: Rising, setup
0x3	3	Leading edge: Falling, setup Trailing edge: Rising, sample

23.5.3 Interrupt Control

Name: INTCTRL
Offset: 0x02
Reset: 0x00
Property: -

Bit	7	6	5	4	3	2	1	0
	RXCIE	TXCIE	DREIE	SSIE				IE
Access	R/W	R/W	R/W	R/W				R/W
Reset	0	0	0	0				0

Bit 7 – RXCIE Receive Complete Interrupt Enable
In Buffer mode, this bit enables the receive complete interrupt. The enabled interrupt will be triggered when the RXCIF flag in the SPIn.INTFLAGS register is set. In the Non-Buffer mode, this bit is ‘0’.

Bit 6 – TXCIE Transfer Complete Interrupt Enable
In Buffer mode, this bit enables the transfer complete interrupt. The enabled interrupt will be triggered when the TXCIF flag in the SPIn.INTFLAGS register is set. In the Non-Buffer mode, this bit is ‘0’.

Bit 5 – DREIE Data Register Empty Interrupt Enable
In Buffer mode, this bit enables the data register empty interrupt. The enabled interrupt will be triggered when the DREIF flag in the SPIn.INTFLAGS register is set. In the Non-Buffer mode, this bit is ‘0’.

Bit 4 – SSIE Slave Select Trigger Interrupt Enable
In Buffer mode, this bit enables the Slave Select interrupt. The enabled interrupt will be triggered when the SSIF flag in the SPIn.INTFLAGS register is set. In the Non-Buffer mode, this bit is ‘0’.

Bit 0 – IE Interrupt Enable
This bit enables the SPI interrupt when the SPI is not in Buffer mode. The enabled interrupt will be triggered when RXCIF/IF is set in the SPIn.INTFLAGS register.

23.5.4 Interrupt Flags - Normal Mode

Name: INTFLAGS
Offset: 0x03
Reset: 0x00
Property: -

Bit	7	6	5	4	3	2	1	0
	IF	WRCOL						
Access	R/W	R/W						
Reset	0	0						

Bit 7 – IF Receive Complete Interrupt Flag/Interrupt Flag
This flag is set when a serial transfer is complete and one byte is completely shifted in/out of the SPIn.DATA register. If $\overline{SS}$ is configured as input and is driven low when the SPI is in Master mode, this will also set this flag. IF is cleared by hardware when executing the corresponding interrupt vector. Alternatively, the IF flag can be cleared by first reading the SPIn.INTFLAGS register when IF is set, and then accessing the SPIn.DATA register.

Bit 6 – WRCOL Transfer Complete Interrupt Flag/Write Collision Flag
The WRCOL flag is set if the SPIn.DATA register is written to before a complete byte has been shifted out. This flag is cleared by first reading the SPIn.INTFLAGS register when WRCOL is set, and then accessing the SPIn.DATA register.

23.5.5 Interrupt Flags - Buffer Mode

Name: INTFLAGS
Offset: 0x03
Reset: 0x00
Property: -

Bit	7	6	5	4	3	2	1	0
	RXCIF	TXCIF	DREIF	SSIF				BUFOVF
Access	R/W	R/W	R/W	R/W				R/W
Reset	0	0	0	0				0

Bit 7 – RXCIF Receive Complete Interrupt Flag
This flag is set when there is unread data in the receive buffer and cleared when the receive buffer is empty (i.e., does not contain any unread data).
When interrupt-driven data reception is used, the receive complete interrupt routine must read the received data from SPIn.DATA in order to clear RXCIF. If not, a new interrupt will occur directly after the return from the current interrupt.
This flag can also be cleared by writing a '1' to its bit location.

Bit 6 – TXCIF Transfer Complete Interrupt Flag/Write Collision Flag
This flag is set when all the data in the transmit shift register has been shifted out and there is no new data in the transmit buffer (SPIn.DATA). The flag is cleared by writing a '1' to its bit location.

Bit 5 – DREIF Data Register Empty Interrupt Flag
This flag indicates whether the transmit buffer (SPIn.DATA) is ready to receive new data. The flag is '1' when the transmit buffer is empty and '0' when the transmit buffer contains data to be transmitted that has not yet been moved into the Shift register. DREIF is cleared after a Reset to indicate that the transmitter is ready.
DREIF is cleared by writing SPIn.DATA. When interrupt-driven data transmission is used, the Data register empty interrupt routine must either write new data to SPIn.DATA in order to clear DREIF or disable the Data register empty interrupt. If not, a new interrupt will occur directly after the return from the current interrupt.

Bit 4 – SSIF Slave Select Trigger Interrupt Flag
This flag indicates that the SPI has been in Master mode and the SS line has been pulled low externally so the SPI is now working in Slave mode. The flag will only be set if the Slave Select Disable bit (SSD) is not '1'. The flag is cleared by writing a '1' to its bit location.

Bit 0 – BUFOVF Buffer Overflow
This flag indicates data loss due to a receiver buffer full condition. This flag is set if a buffer overflow condition is detected. A buffer overflow occurs when the receive buffer is full (two characters) and a third byte has been received in the Shift register. If there is no transmit data the buffer overflow will not be set before the start of a new serial transfer. This flag is valid until the receive buffer (SPIn.DATA) is read. Always write this bit location to '0' when writing the SPIn.INTFLAGS register.

23.5.6 Data

Name: DATA
Offset: 0x04
Reset: 0x00
Property: -

Bit	7	6	5	4	3	2	1	0
	DATA[7:0]							
Access	R/W	R/W	R/W	R/W	R/W	R/W	R/W	R/W
Reset	0	0	0	0	0	0	0	0

Bits 7:0 – DATA[7:0] SPI Data
The SPIn.DATA register is used for sending and receiving data. Writing to the register initiates the data transmission, and the byte written to the register will be shifted out on the SPI output line.
Reading this register in Buffer mode will read the second receive buffer and the contents of the first receive buffer will be moved to the second receive buffer.

24. TWI - Two-Wire Interface

24.1 Features

- Bidirectional, two-wire communication interface
- Philips I^2C compatible
  - Standard mode (Sm/100 kHz with slew-rate limited output)
  - Fast mode (Fm/400 kHz with slew-rate limited output)
  - Fast mode plus (Fm+/1 MHz with ×10 output drive strength)
- System Management Bus (SMBus) 2.0 compatible (100 kHz with slew-rate limited output)
  - Support arbitration between Start/Repeated Start and data bit
  - Slave arbitration allows support for the Address Resolution Protocol (ARP)
  - Configurable SMBus Layer 1 time-outs in hardware
  - Independent time-outs for Dual mode
- Independent Master and Slave operation
  - Combined (same pins) or Dual mode (separate pins)
  - Single or multi-master bus operation with full arbitration support
- Flexible slave address match hardware operating in all sleep modes, including Power-Down
  - 7-bit and general call address recognition
  - 10-bit addressing support in collaboration with software
  - Address mask register allows address range masking, alternatively it can be used as a secondary address match
  - Optional software address recognition for unlimited number of addresses
- Input filter for bus noise suppression

24.2 Overview

The Two-Wire Interface (TWI) peripheral is a bidirectional, two-wire communication interface peripheral. The only external hardware needed to implement the bus are two pull-up resistors, one for each bus line.

Any device connected to the TWI bus can act as a master, a slave, or both. The master generates the serial clock (SCL) and initiates data transactions by addressing one slave and telling whether it wants to transmit or receive data. One TWI bus connects many slaves to one or several masters. An arbitration scheme handles the case where more than one master tries to transmit data at the same time. The mechanisms for resolving bus contention are inherent in the protocol standards.

The TWI peripheral supports concurrent master and slave functionality, which are implemented as independent units with separate enabling and configuration. The master module supports multi-master bus operation and arbitration. It also generates the serial clock (SCL) by using a baud rate generator capable of generating the standard (Sm) and fast (Fm, Fm+) bus frequencies from 100 kHz up to 1 MHz. A “smart mode” is added that can be enabled to auto-trigger operations and thus reduce software complexity.

The slave module implements a 7-bit address match and general address call recognition in hardware. 10-bit addressing is also supported. It also incorporates an address mask register that can be used as a second address match register or as a register for address range masking. The address recognition hardware continues to operate in all sleep modes, including Power Down mode. This enables the slave to wake up the device even from the deepest sleep modes where all oscillators are turned OFF when it detects address match. Address matching can optionally be fully handled by software.

The TWI peripheral will detect START and STOP conditions, bus collisions, and bus errors. Arbitration lost, errors, collision, and clock hold on the bus are also detected and indicated in separate status flags available in both master and slave modes.

It is also possible to enable the Dual mode. In this case, the slave I/O pins are selected from an alternative port, enabling fully independent and simultaneous master and slave operation.

24.2.1 Block Diagram

Figure 24-1. TWI Block Diagram

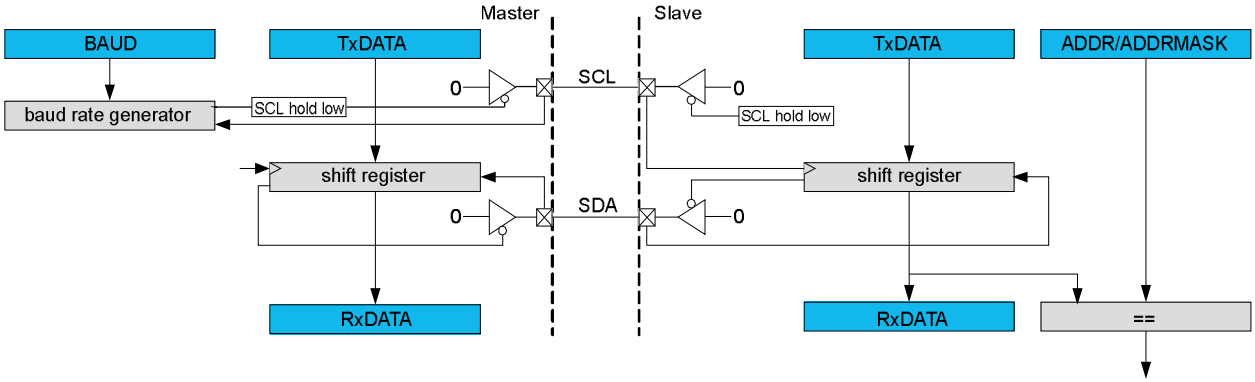

24.2.2 Signal Description

Signal	Description	Type
SCL	Serial clock line	Digital I/O
SDA	Serial data line	Digital I/O

24.3 Functional Description

24.3.1 Initialization

Before enabling the master or the slave unit, ensure that the correct settings for SDASETUP, SDAHOLD, and, if used, Fast-mode plus (FMPEN) are stored in TWI.CTRLA. If alternate pins are to be used for the slave, this must be specified in the TWIn.DUALCTRL register as well. Note that for dual mode the master enables the primary SCL/SDA pins, while the ENABLE bit in TWIn.DUALCTRL enables the secondary pins.

Master Operation

It is recommended to write the Master Baud Rate register (TWIn.BAUD) before enabling the TWI master since TIMEOUT is dependent on the baud rate setting. To start the TWI master, write a ‘1’ to the ENABLE bit and configure an appropriate TIMEOUT if using the TWI in an SMBus environment. The ENABLE and TIMEOUT bits are all located in the Master Control A register (TWIn.MCTRLA). If no TIMEOUT value is set, which is the case for I²C operation, the bus state must be manually set to IDLE by writing 0x1 to BUSSTATE in TWIn.MSTATUS at a “safe” point in time. Note that unlike the SMBus specification, the I²C specification does not specify when it is safe to assume that the bus is IDLE in a multi-master system. The application can solve this by ensuring that after all masters connected to the bus are enabled, one supervising master performs a transfer before any of the other masters. The stop condition of this initial transfer will indicate to the Bus State Monitor logic that the bus is IDLE and ready.

Slave Operation

To start the TWI slave, write the Slave Address (TWIn.SADDR), and write a '1' to the ENABLE bit in the Slave Control A register (TWIn.SCTRLA). The TWI peripheral will wait to receive a byte addressed to it.

24.3.2 General TWI Bus Concepts

The TWI provides a simple, bidirectional, two-wire communication bus consisting of a serial clock line (SCL) and a serial data line (SDA). The two lines are open-collector lines (wired-AND), and pull-up resistors (Rp) are the only external components needed to drive the bus. The pull-up resistors provide a high level on the lines when none of the connected devices are driving the bus.

The TWI bus is a simple and efficient method of interconnecting multiple devices on a serial bus. A device connected to the bus can be a master or a slave, where the master controls the bus and all communication.

Figure 24-2 illustrates the TWI bus topology.

Figure 24-2. TWI Bus Topology

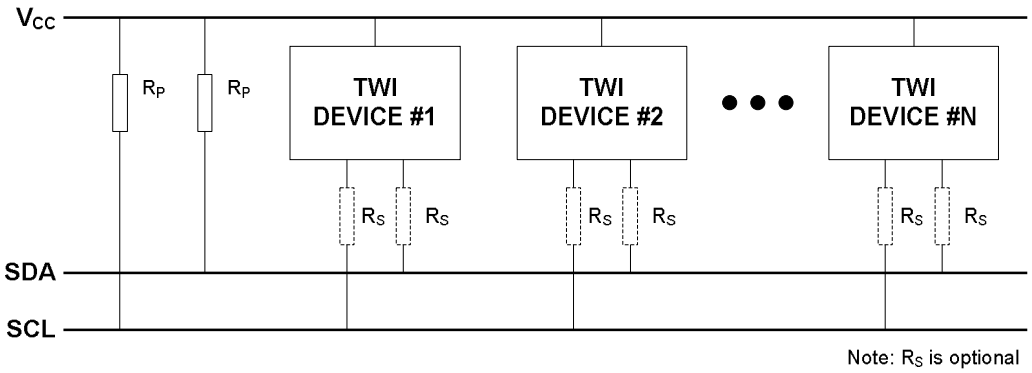

A unique address is assigned to all slave devices connected to the bus, and the master will use this to address a slave and initiate a data transaction.

Several masters can be connected to the same bus, called a multi-master environment. An arbitration mechanism is provided for resolving bus ownership among masters, since only one master device may own the bus at any given time.

A device can contain both master and slave logic and can emulate multiple slave devices by responding to more than one address.

A master indicates the start of a transaction by issuing a Start condition (S) on the bus. An address packet with a slave address (ADDRESS) and an indication whether the master wishes to read or write data (R/$\overline{W}$) are then sent. After all data packets (DATA) are transferred, the master issues a Stop condition (P) on the bus to end the transaction. The receiver must acknowledge (A) or not-acknowledge ($\overline{A}$) each byte received.

Figure 24-3 shows a TWI transaction.

Figure 24-3. Basic TWI Transaction Diagram Topology for a 7-bit Address Bus

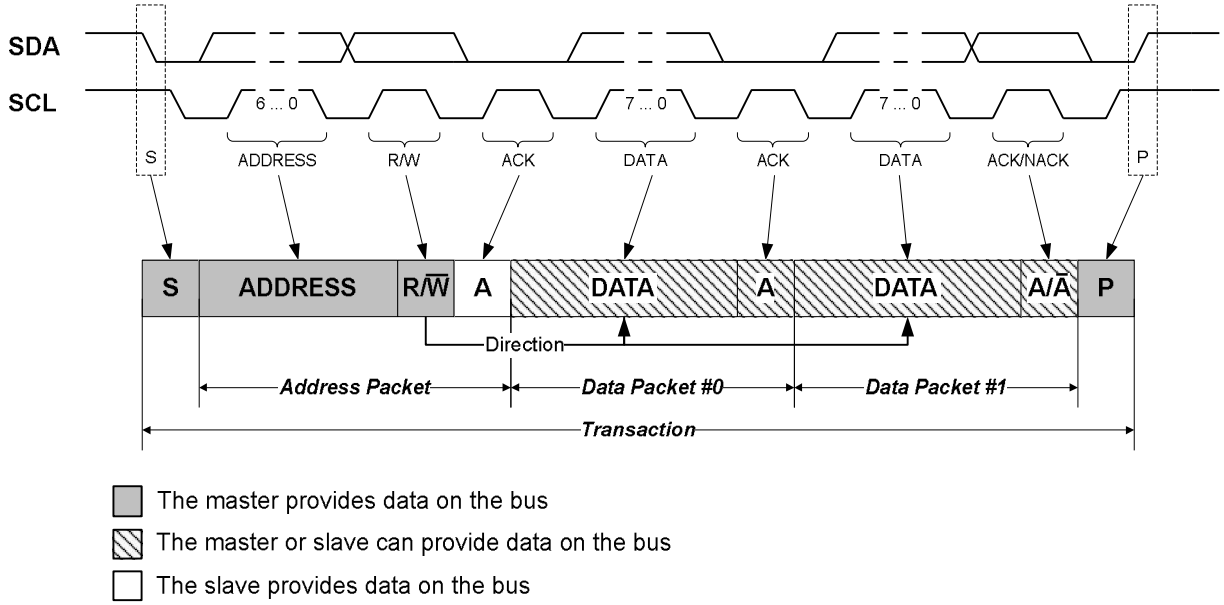

The master provides the clock signal for the transaction, but a device connected to the bus is allowed to stretch the low-level period of the clock to decrease the clock speed.

24.3.2.1 Start and Stop Conditions

Two unique bus conditions are used for marking the beginning (Start) and end (Stop) of a transaction. The master issues a Start condition (S) by indicating a high-to-low transition on the SDA line while the SCL line is kept high. The master completes the transaction by issuing a Stop condition (P), indicated by a low-to-high transition on the SDA line while the SCL line is kept high.

Figure 24-4. Start and Stop Conditions

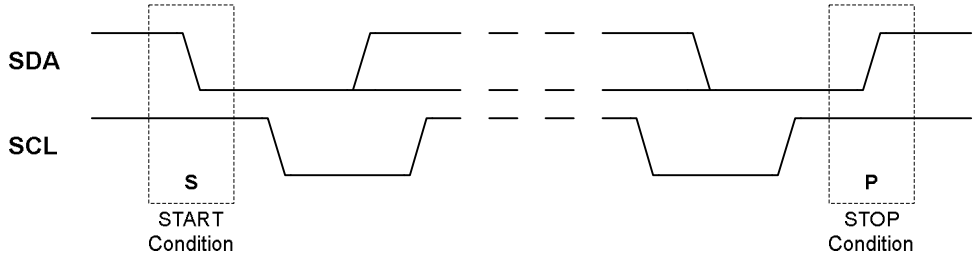

Multiple Start conditions can be issued during a single transaction. A Start condition that is not directly following a Stop condition is called a Repeated Start condition (Sr).

24.3.2.2 Bit Transfer

As illustrated by Figure 24-5, a bit transferred on the SDA line must be stable for the entire high period of the SCL line. Consequently, the SDA value can only be changed during the low period of the clock. This is ensured in hardware by the TWI module.

Figure 24-5. Data Validity

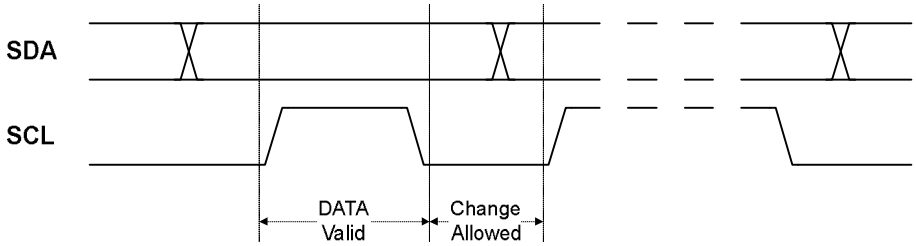

Combining bit transfers result in the formation of address and data packets. These packets consist of eight data bits (one byte) with the Most Significant bit transferred first, plus a single-bit not-Acknowledge (NACK) or Acknowledge (ACK) response. The addressed device signals ACK by pulling the SCL line low during the ninth clock cycle, and signals NACK by leaving the line SCL high.

24.3.2.3 Address Packet

After the Start condition, a 7-bit address followed by a read/write (R/$\overline{W}$) bit is sent. This is always transmitted by the master. A slave recognizing its address will ACK the address by pulling the data line low for the next SCL cycle, while all other slaves should keep the TWI lines released and wait for the next Start and address. The address, R/$\overline{W}$ bit, and Acknowledge bit combined is the address packet. Only one address packet for each Start condition is allowed, also when 10-bit addressing is used.

The R/$\overline{W}$ bit specifies the direction of the transaction. If the R/$\overline{W}$ bit is low, it indicates a master write transaction, and the master will transmit its data after the slave has acknowledged its address. If the R/$\overline{W}$ bit is high, it indicates a master read transaction, and the slave will transmit its data after acknowledging its address.

24.3.2.4 Data Packet

An address packet is followed by one or more data packets. All data packets are nine bits long, consisting of one data byte and one Acknowledge bit. The direction bit in the previous address packet determines the direction in which the data is transferred.

24.3.2.5 Transaction

A transaction is the complete transfer from a Start to a Stop condition, including any Repeated Start conditions in between. The TWI standard defines three fundamental transaction modes: Master write, master read, and a combined transaction.

Figure 24-6 illustrates the master write transaction. The master initiates the transaction by issuing a Start condition (S) followed by an address packet with the direction bit set to ‘0’ (ADDRESS+$\overline{W}$).

Figure 24-6. Master Write Transaction

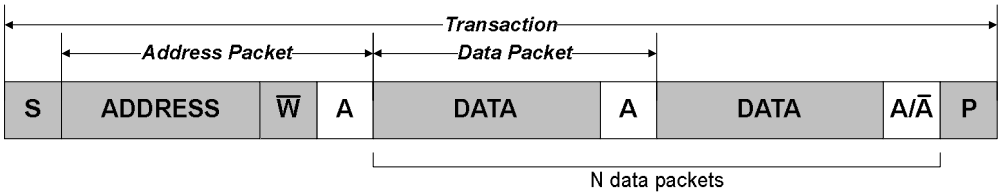

Assuming the slave acknowledges the address, the master can start transmitting data (DATA) and the slave will ACK or NACK (A/$\overline{A}$) each byte. If no data packets are to be transmitted, the master terminates the transaction by issuing a Stop condition (P) directly after the address packet. There are no limitations to the number of data packets that can be transferred. If the slave signals a NACK to the data, the master must assume that the slave cannot receive any more data and terminate the transaction.

Figure 24-7 illustrates the master read transaction. The master initiates the transaction by issuing a Start condition followed by an address packet with the direction bit set to '1' (ADDRESS+R). The addressed slave must acknowledge the address for the master to be allowed to continue the transaction.

Figure 24-7. Master Read Transaction

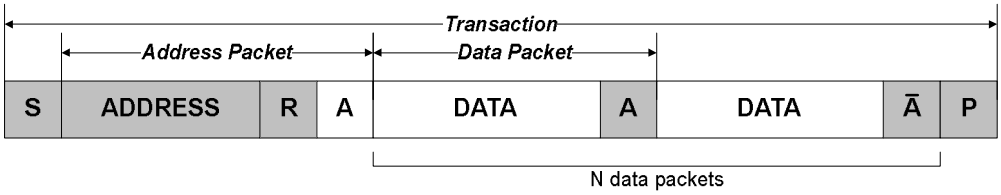

Assuming the slave acknowledges the address, the master can start receiving data from the slave. There are no limitations to the number of data packets that can be transferred. The slave transmits the data while the master signals ACK or NACK after each data byte. The master terminates the transfer with a NACK before issuing a Stop condition.

Figure 24-8 illustrates a combined transaction. A combined transaction consists of several read and write transactions separated by Repeated Start conditions (Sr).

Figure 24-8. Combined Transaction

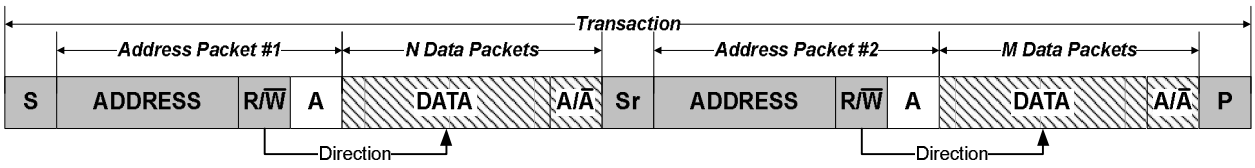

24.3.2.6 Clock and Clock Stretching

All devices connected to the bus are allowed to stretch the low period of the clock to slow down the overall clock frequency or to insert wait states while processing data. A device that needs to stretch the clock can do this by holding/forcing the SCL line low after it detects a low level on the line.

Three types of clock stretching can be defined, as shown in Figure 24-9.

Figure 24-9. Clock Stretching (1)

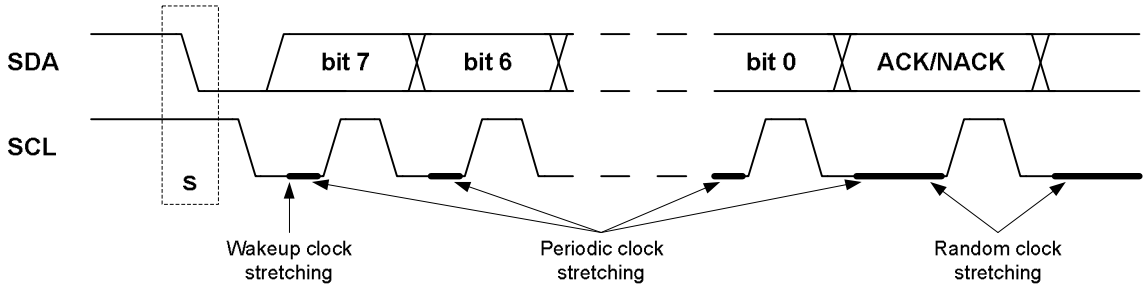

Note: Clock stretching is not supported by all I²C slaves and masters.

If a slave device is in Sleep mode and a Start condition is detected, the clock stretching normally works during the wake-up period. For AVR devices, the clock stretching will be either directly before or after the ACK/NACK bit, as AVR devices do not need to wake-up for transactions that are not addressed to it.

A slave device can slow down the bus frequency by stretching the clock periodically on a bit level. This allows the slave to run at a lower system clock frequency. However, the overall performance of the bus will be reduced accordingly. Both the master and slave device can randomly stretch the clock on a byte level basis before and after the ACK/NACK bit. This provides time to process incoming or prepare outgoing data or perform other time-critical tasks.

In the case where the slave is stretching the clock, the master will be forced into a wait state until the slave is ready, and vice versa.

24.3.2.7 Arbitration

A master can start a bus transaction only if it has detected that the bus is idle. As the TWI bus is a multi-master bus, it is possible that two devices may initiate a transaction at the same time. This results in multiple masters owning the bus simultaneously. This is solved using an arbitration scheme where the master loses control of the bus if it is not able to transmit a high level on the SDA line. The masters who lose arbitration must then wait until the bus becomes idle (i.e., wait for a Stop condition) before attempting to reacquire bus ownership. Slave devices are not involved in the arbitration procedure.

Figure 24-10. TWI Arbitration

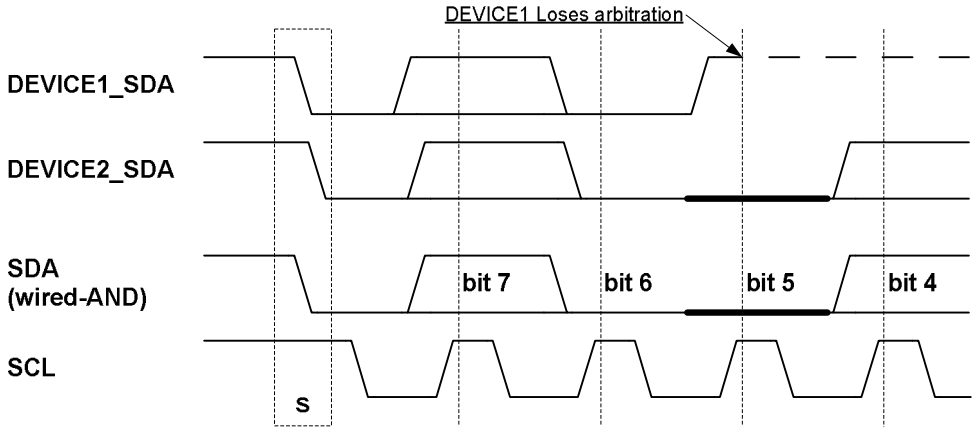

Figure 24-10 shows an example where two TWI masters are contending for bus ownership. Both devices are able to issue a Start condition, but DEVICE1 loses arbitration when attempting to transmit a high level (bit 5) while DEVICE2 is transmitting a low level.

Arbitration between a Repeated Start condition and a data bit, a Stop condition and a data bit, or a Repeated Start condition and a Stop condition are not allowed and will require special handling by software.

24.3.2.8 Synchronization

A clock synchronization algorithm is necessary for solving situations where more than one master is trying to control the SCL line at the same time. The algorithm is based on the same principles used for the clock stretching previously described. Figure 24-11 shows an example where two masters are competing for control over the bus clock. The SCL line is the wired-AND result of the two masters clock outputs.

Figure 24-11. Clock Synchronization

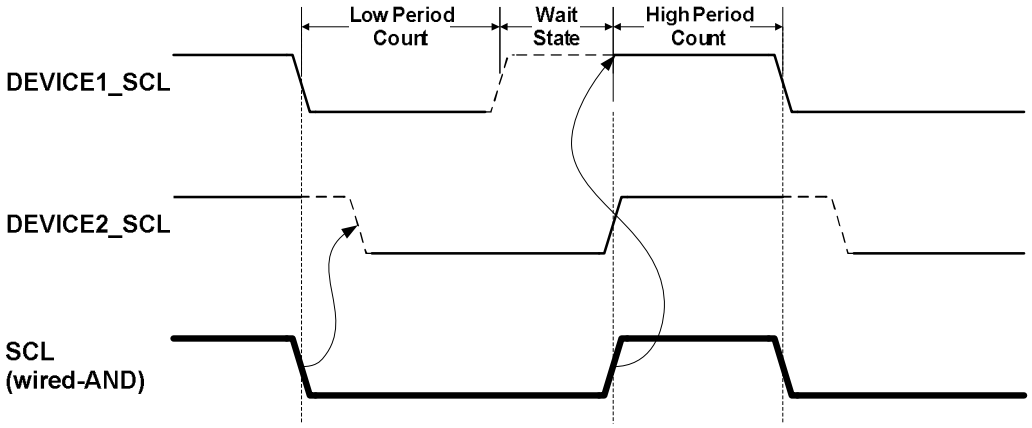

A high-to-low transition on the SCL line will force the line low for all masters on the bus, and they will start timing their low clock period. The timing length of the low clock period can vary among the masters. When a master (DEVICE1 in this case) has completed its low period, it releases the SCL line. However, the SCL line will not go high until all masters have released it. Consequently, the SCL line will be held low by the device with the longest low period (DEVICE2). Devices with shorter low periods must insert a wait state until the clock is released. All masters start their high period when the SCL line is released by all devices and has gone high. The device, which first completes its high period (DEVICE1), forces the clock line low, and the procedure is then repeated. The result is that the device with the shortest clock period determines the high period, while the low period of the clock is determined by the device with the longest clock period.

24.3.3 TWI Bus State Logic

The bus state logic continuously monitors the activity on the TWI bus lines when the master is enabled. It continues to operate in all Sleep modes, including power-down.

The bus state logic includes Start and Stop condition detectors, collision detection, inactive bus time-out detection, and a bit counter. These are used to determine the bus state. The software can get the current bus state by reading the Bus State bits in the master STATUS register. The bus state can be unknown, idle, busy, or owner, and is determined according to the state diagram shown in Figure 24-12. The values of the Bus State bits according to state, are shown in binary in the figure below.

Figure 24-12. Bus State, State Diagram

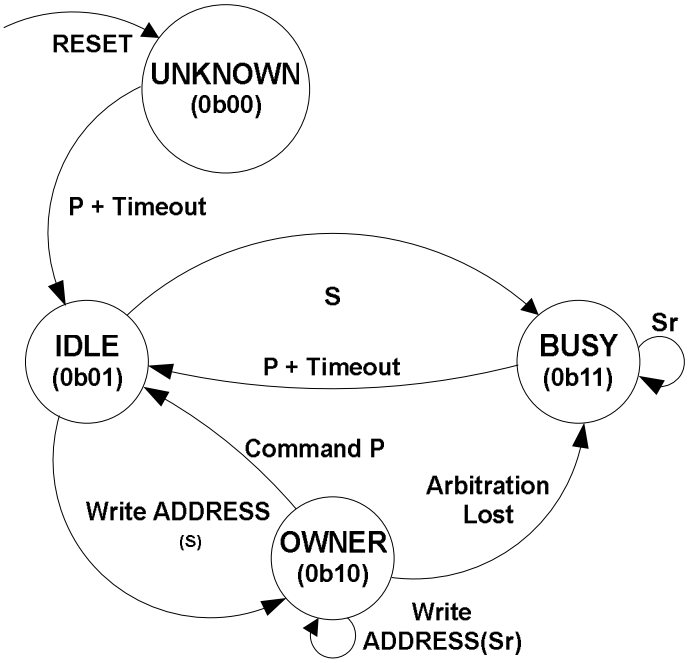

After a system reset and/or TWI master enable, the bus state is unknown. The bus state machine can be forced to enter the idle state by writing to the Bus State bits accordingly. If no state is set by the application software, the bus state will become idle when the first Stop condition is detected. If the master inactive bus time-out is enabled, the bus state will change to idle on the occurrence of a time-out. After a known bus state is established, only a system reset or disabling of the TWI master will set the state to unknown.

When the bus is idle, it is ready for a new transaction. If a Start condition generated externally is detected, the bus becomes busy until a Stop condition is detected. The Stop condition will change the bus state to idle. If the master inactive bus time-out is enabled, the bus state will change from busy to idle on the occurrence of a time-out.

If a Start condition is generated internally while in an idle state, the owner state is entered. If the complete transaction was performed without interference (i.e., no collisions are detected), the master will issue a Stop condition and the bus state will change back to idle. If a collision is detected, the arbitration is assumed lost and the bus state becomes busy until a Stop condition is detected. A Repeated Start condition will only change the bus state if arbitration is lost during issuing the Repeated Start. Arbitration during Repeated Start can be lost only if the arbitration has been ongoing since the first Start condition. This happens if two masters send the exact same ADDRESS+DATA before one of the masters' issues a repeated Start (Sr).

24.3.4 Operation

24.3.4.1 Electrical Characteristics

The TWI module in AVR devices follows the electrical specifications and timing of I²C bus and SMBus. These specifications are not 100% compliant, and so to ensure correct behavior, the inactive bus time-out period should be set in TWI Master mode. Refer to 24.3.4.2 TWI Master Operation for more details.

24.3.4.2 TWI Master Operation

The TWI master is byte-oriented, with an optional interrupt after each byte. There are separate interrupt flags for master write and master read. Interrupt flags can also be used for polled operation. There are dedicated status flags for indicating ACK/NACK received, bus error, arbitration lost, clock hold, and bus state.

When an interrupt flag is set, the SCL line is forced low. This will give the master time to respond or handle any data, and will in most cases require software interaction. Figure 24-13 shows the TWI master operation. The diamond-shaped symbols (SW) indicate where software interaction is required. Clearing the interrupt flags releases the SCL line.

Figure 24-13. TWI Master Operation

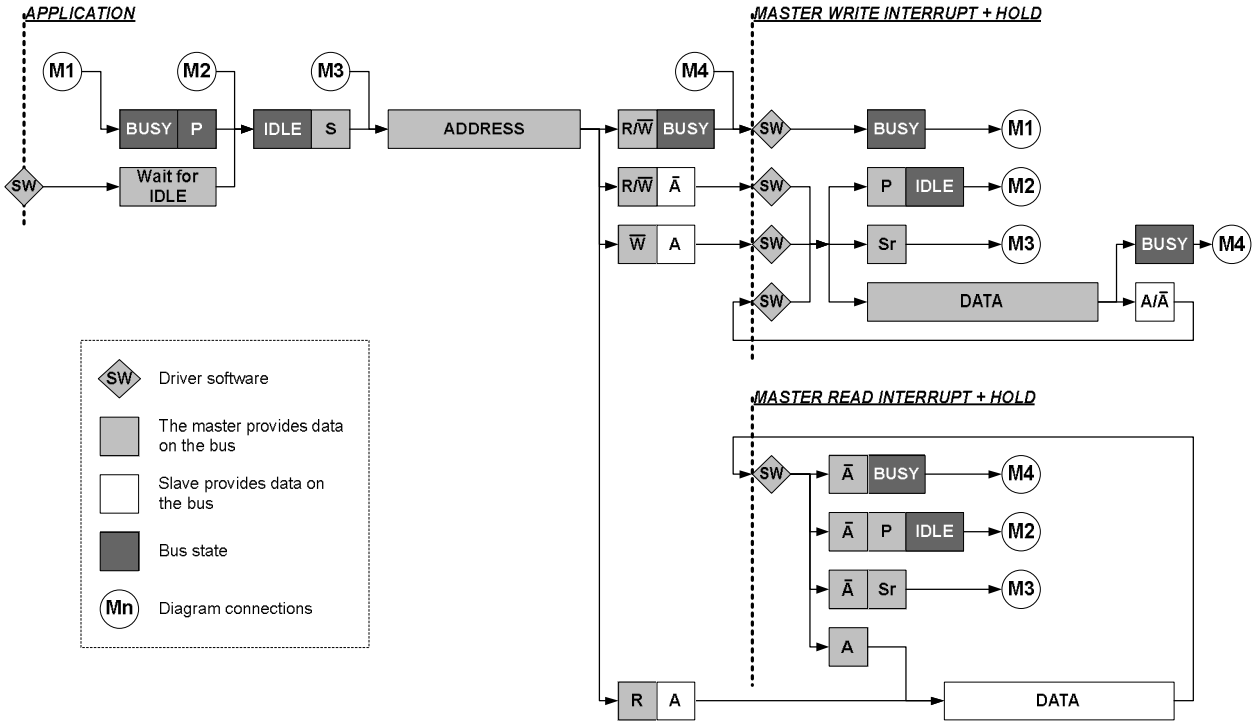

The number of interrupts generated is kept to a minimum by an automatic handling of most conditions.

24.3.4.2.1 Clock Generation

The TWIn.MBAUD register must be set to a value that results in a TWI bus clock frequency (f_{SCL}) equal or less than 100 kHz/400 kHz/1 MHz, dependent on the mode used by the application (Standard mode Sm/Fast mode Fm/Fast mode plus Fm+).

The low (T_{LOW}) and high (T_{HIGH}) times are determined by the Baud Rate register (TWIn.MBAUD), while the rise (T_{RISE}) and fall (T_{FALL}) times are determined by the bus topology. Because of the wired-AND logic of the bus, T_{FALL} will be considered as part of T_{LOW}. Likewise, T_{RISE} will be in a state between T_{LOW} and T_{HIGH} until a high state has been detected.

Figure 24-14. SCL Timing

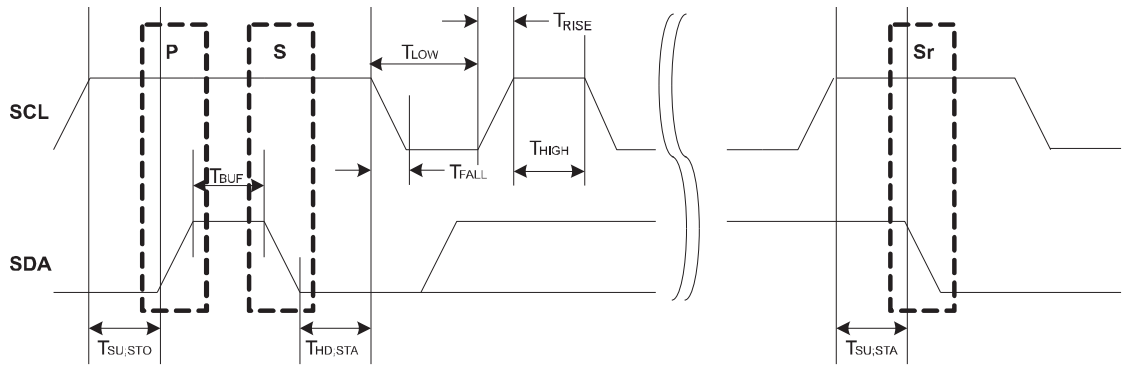

- T_{LOW} – Low period of SCL clock
- $T_{SU;STO}$ – Set-up time for stop condition
- T_{BUF} – Bus-free time between stop and start conditions
- $T_{HD;STA}$ – Hold time (repeated) start condition
- $T_{SU;STA}$ – Set-up time for repeated start condition
- T_{HIGH} is timed using the SCL high time count from TWIn.MBAUD
- T_{RISE} is determined by the bus impedance; for internal pull-ups. Refer to *Electrical Characteristics*.
- T_{FALL} is determined by the open-drain current limit and bus impedance; can typically be regarded as zero. Refer to *Electrical Characteristics* for details.

The SCL frequency is given by:

$$f_{\mathrm{SCL}} = \frac{1}{T_{\mathrm{LOW}} + T_{\mathrm{HIGH}} + T_{\mathrm{RISE}}}$$

The BAUD field in TWIn.MBAUD value is used to time both SCL high and SCL low which gives the following formula of SCL frequency:

$$f_{\mathrm{SCL}} = \frac{f_{\mathrm{CLK_PER}}}{10 + 2BAUD + f_{\mathrm{CLK_PER}} \cdot T_{\mathrm{RISE}}}$$

24.3.4.2.2 Transmitting Address Packets

After issuing a Start condition, the master starts performing a bus transaction when the Master Address register is written with the 7-bit slave address and direction bit. If the bus is busy, the TWI master will wait until the bus becomes idle before issuing the Start condition.

Depending on arbitration and the R/$\overline{W}$ direction bit, one of four distinct cases (M1 to M4) arises following the address packet. The different cases must be handled in software.

Case M1: Arbitration Lost or Bus Error during Address Packet

If arbitration is lost during the sending of the address packet, both the Master Write Interrupt Flag (WIF in TWIn.MSTATUS) and Arbitration Lost Flag (ARBLOST in TWIn.MSTATUS) are set. Serial data output to the SDA line

is disabled, and the SCL line is released. The master is no longer allowed to perform any operation on the bus until the bus state has changed back to idle.

A bus error will behave in the same way as an arbitration lost condition, but the Bus Error Flag (BUSERR in TWIn.MSTATUS) is set in addition to the write interrupt and arbitration lost flags.

Case M2: Address Packet Transmit Complete - Address not Acknowledged by Slave
If no slave device responds to the address, the Master Write Interrupt Flag (WIF in TWIn.MSTATUS) and the Master Received Acknowledge Flag (RXACK in TWIn.MSTATUS) are set. The RXACK flag reflects the physical state of the ACK bit (i.e.< no slave did pull the ACK bit low). The clock hold is active at this point, preventing further activity on the bus.

Case M3: Address Packet Transmit Complete - Direction Bit Cleared
If the master receives an ACK from the slave, the Master Write Interrupt Flag (WIF in TWIn.MSTATUS) is set and the Master Received Acknowledge Flag (RXACK in TWIn.MSTATUS) is cleared. The clock hold is active at this point, preventing further activity on the bus.

Case M4: Address Packet Transmit Complete - Direction Bit Set
If the master receives an ACK from the slave, the master proceeds to receive the next byte of data from the slave. When the first data byte is received, the Master Read Interrupt Flag (RIF in TWIn.MSTATUS) is set and the Master Received Acknowledge Flag (RXACK in TWIn.MSTATUS) is cleared. The clock hold is active at this point, preventing further activity on the bus.

24.3.4.2.3 Transmitting Data Packets

Assuming the above M3 case, the master can start transmitting data by writing to the Master Data (TWIn.MDATA) register, which will also clear the Write Interrupt Flag (WIF). During data transfer, the master is continuously monitoring the bus for collisions and errors. The WIF will be set anew after the full data packet transfer has been completed, the arbitration is lost (ARBLOST), or if a bus error (BUSERR) occur during the transfer.

The WIF, ARBLOST, and BUSERR flags together with the value of the last acknowledge bit (RXACK) are all located in the Master Status (TWIn.MSTATUS) register. The RXACK status is only valid if WIF is set and not valid if ARBLOST or BUSERR is set, so the software driver must check this first. The RXACK will be zero if the slave responds to the data with an ACK, which indicates that the slave is ready for more data (if any). A NACK received from the slave indicates that the slave is not able to or does not need to receive more data after the last byte. The master must then either issue a Repeated Start (Sr) (write a new value to TWIn.MADDR) or complete the transaction by issuing a Stop condition (MCMD field in TWIn.MCTRLB = MCMD_STOP).

In I²C slaves, the use of Repeated Start conditions (Sr) entirely depends on how each slave interprets the protocol. In SMBus slaves, interpretation of a Repeated Start condition is defined by higher levels of the protocol specification.

24.3.4.2.4 Receiving Data Packets

Assuming case M4 above, the master has already received one byte from the slave. The master read interrupt flag is set, and the master must prepare to receive new data. The master must respond to each byte with ACK or NACK. A NACK response might not be successfully executed, as arbitration can be lost during the transmission. If a collision is detected, the master loses arbitration and the arbitration lost flag is set.

24.3.4.2.5 Quick Command Mode

With Quick Command enabled (QCEN in TWIn.MCTRLA), the R/W# bit of the slave address denotes the command. This is an SMBus specific command where the R/$\overline{W}$ bit may be used to simply turn a device function ON or OFF, or enable/disable a low-power standby mode. There is no data sent or received.

After the master receives an acknowledge from the slave, either RIF or WIF flag in TWIn.MSTATUS will be set depending on the polarity of R/$\overline{W}$. When either RIF or WIF flag is set after issuing a Quick Command, the TWI will accept a stop command through writing the CMD bits in TWIn.MCTRLB.

Figure 24-15. Quick Command Frame Format

S	Address	R/$\overline{W}$	A	P

24.3.4.3 TWI Slave Operation

The TWI slave is byte-oriented with optional interrupts after each byte. There are separate slave data and address/stop interrupt flags. Interrupt flags can also be used for polled operation. There are dedicated status flags for indicating ACK/NACK received, clock hold, collision, bus error, and read/write direction.

When an interrupt flag is set, the SCL line is forced low. This will give the slave time to respond or handle data, and will in most cases require software interaction. Figure 24-16 shows the TWI slave operation. The diamond-shaped symbols (SW) indicate where software interaction is required.

Figure 24-16. TWI Slave Operation

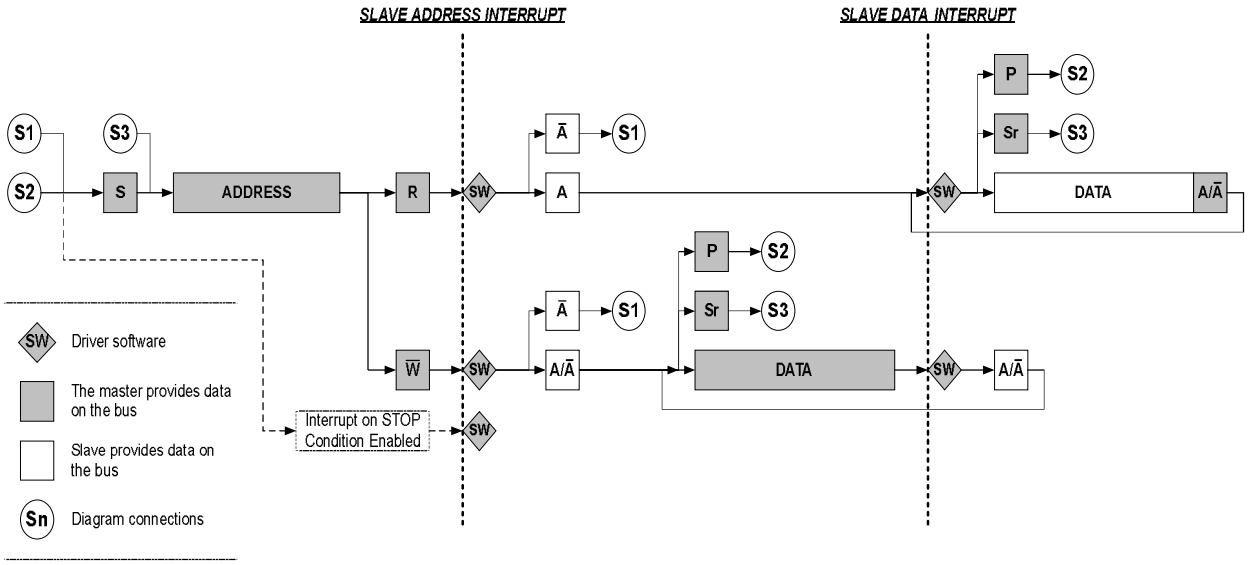

The number of interrupts generated is kept to a minimum by automatic handling of most conditions. The Quick command can be enabled to auto-trigger operations and reduce software complexity.

Address Recognition mode can be enabled to allow the slave to respond to all received addresses.

24.3.4.3.1 Receiving Address Packets

When the TWI slave is properly configured, it will wait for a Start condition to be detected. When this happens, the successive address byte will be received and checked by the address match logic, and the slave will ACK a correct address and store the address in the TWIn.DATA register. If the received address is not a match, the slave will not acknowledge and store the address, but wait for a new Start condition.

The slave address/stop interrupt flag is set when a Start condition succeeded by a valid address byte is detected. A general call address will also set the interrupt flag.

A Start condition immediately followed by a Stop condition is an illegal operation and the bus error flag is set.

The R/$\overline{W}$ direction flag reflects the direction bit received with the address. This can be read by software to determine the type of operation currently in progress.

Depending on the R/$\overline{W}$ direction bit and bus condition, one of four distinct cases (S1 to S4) arises following the address packet. The different cases must be handled in software.

Case S1: Address Packet Accepted - Direction Bit Set

If the R/$\overline{W}$ direction flag is set, this indicates a master read operation. The SCL line is forced low by the slave, stretching the bus clock. If ACK is sent by the slave, the slave hardware will set the data interrupt flag indicating data is needed for transmit. Data, Repeated Start, or Stop can be received after this. If NACK is sent by the slave, the slave will wait for a new Start condition and address match.

Case S2: Address Packet Accepted - Direction Bit Cleared

If the R/$\overline{W}$ direction flag is cleared, this indicates a master write operation. The SCL line is forced low, stretching the bus clock. If ACK is sent by the slave, the slave will wait for data to be received. Data, Repeated Start, or Stop can be received after this. If NACK is sent, the slave will wait for a new Start condition and address match.

Case S3: Collision
If the slave is not able to send a high level or NACK, the collision flag is set, and it will disable the data and acknowledge output from the slave logic. The clock hold is released. A Start or Repeated Start condition will be accepted.

Case S4: STOP Condition Received
When the Stop condition is received, the slave address/stop flag will be set, indicating that a Stop condition, and not an address match, occurred.

24.3.4.3.2 Receiving Data Packets
The slave will know when an address packet with R/$\overline{W}$ direction bit cleared has been successfully received. After acknowledging this, the slave must be ready to receive data. When a data packet is received, the data interrupt flag is set and the slave must indicate ACK or NACK. After indicating a NACK, the slave must expect a Stop or repeated Start condition.

24.3.4.3.3 Transmitting Data Packets
The slave will know when an address packet with R/$\overline{W}$ direction bit set has been successfully received. It can then start sending data by writing to the slave data register. When a data packet transmission is completed, the data interrupt flag is set. If the master indicates NACK, the slave must stop transmitting data and expect a Stop or repeated Start condition.

24.3.4.4 Smart Mode
The TWI interface has a Smart mode that simplifies application code and minimizes the user interaction needed to adhere to the I^2C protocol. For TWI Master, Smart mode accomplishes this by automatically sending an ACK as soon as data register TWI.MDATA is read. This feature is only active when the ACKACT bit in TWIn.MCTRLA register is set to ACK. If ACKACT is set to NACK, the TWI Master will not generate a NACK bit followed by reading the Data register.

With Smart mode enabled for TWI Slave (SMEN bit in TWIn.SCTRLA), DIF (Data Interrupt Flag) will automatically be cleared if Data register (TWIn.SDATA) is read or written.

24.3.5 Interrupts
Table 24-1. Available Interrupt Vectors and Sources

Name	Vector Description	Conditions
Slave	TWI Slave interrupt	• DIF: Data Interrupt Flag in TWIn.SSTATUS set • APIF: Address or Stop Interrupt Flag in TWIn.SSTATUS set
Master	TWI Master interrupt	• RIF: Read Interrupt Flag in TWIn.MSTATUS set • WIF: Write Interrupt Flag in TWIn.MSTATUS set

When an interrupt condition occurs, the corresponding Interrupt Flag is set in the Master register (TWIn.MSTATUS) or Slave Status register (TWIn.SSTATUS).
When several interrupt request conditions are supported by an interrupt vector, the interrupt requests are ORed together into one combined interrupt request to the interrupt controller. The user must read the Interrupt flags from the Master Status (TWIn.MSTATUS) register or Slave Status (TWIn.SSTATUS) register to determine which of the interrupt conditions are present.

24.3.6 Sleep Mode Operation
The bus state logic and slave continue to operate in all Sleep modes, including Power-Down Sleep mode. If a slave device is in Sleep mode and a Start condition is detected, clock stretching is active during the wake-up period until the system clock is available. The master will stop operation in all Sleep modes.

24.4 Register Summary - TWIn

Offset	Name	Bit Pos.								
0x00	CTRLA	7:0				SDASETUP	SDAHOLD[1:0]		FMPEN	
0x01	DUALCTRL	7:0					SDAHOLD[1:0]		FMPEN	ENABLE
0x02	DBGCTRL	7:0								DBGRUN
0x03	MCTRLA	7:0	RIEN	WIEN		QCEN	TIMEOUT[1:0]		SMEN	ENABLE
0x04	MCTRLB	7:0					FLUSH	ACKACT	MCMD[1:0]	
0x05	MSTATUS	7:0	RIF	WIF	CLKHOLD	RXACK	ARBLOST	BUSERR	BUSSTATE[1:0]	
0x06	MBAUD	7:0	BAUD[7:0]							
0x07	MADDR	7:0	ADDR[7:0]							
0x08	MDATA	7:0	DATA[7:0]							
0x09	SCTRLA	7:0	DIEN	APIEN	PIEN			PMEN	SMEN	ENABLE
0x0A	SCTRLB	7:0						ACKACT	SCMD[1:0]	
0x0B	SSTATUS	7:0	DIF	APIF	CLKHOLD	RXACK	COLL	BUSERR	DIR	AP
0x0C	SADDR	7:0	ADDR[7:0]							
0x0D	SDATA	7:0	DATA[7:0]							
0x0E	SADDRMASK	7:0	ADDRMASK[6:0]							ADDREN

24.5 Register Description

24.5.1 Control A

Name: CTRLA
Offset: 0x00
Reset: 0x00
Property: -

Bit	7	6	5	4	3	2	1	0
				SDASETUP	SDAHOLD[1:0]		FMPEN	
Access				R/W	R/W	R/W	R/W	
Reset				0	0	0	0	

Bit 4 – SDASETUP SDA Setup Time
By default, there are four clock cycles of setup time on SDA out signal while reading from the slave part of the TWI module. Writing this bit to '1' will change the setup time to eight clocks.

Value	Name	Description
0	4CYC	SDA setup time is four clock cycles
1	8CYC	SDA setup time is eight clock cycle

Bits 3:2 – SDAHOLD[1:0] SDA Hold Time
Writing these bits selects the SDA hold time.

Table 24-2. SDA Hold Time

SDAHOLD[1:0]	Nominal Hold Time	Hold Time Range Across All Corners [ns]	Description
0x0	OFF	0	Hold time OFF.
0x1	50 ns	36 - 131	Backward compatible setting.
0x2	300 ns	180 - 630	Meets SMBus specification under typical conditions.
0x3	500 ns	300 - 1050	Meets SMBus specification across all corners.

Bit 1 – FMPEN FM Plus Enable
Writing these bits selects the 1 MHz bus speed (Fast mode plus, Fm+) for the TWI in default configuration or for TWI Master in dual mode configuration.

Value	Description
0	Fm+ disabled
1	Fm+ enabled

24.5.2 Dual Mode Control Configuration

Name: DUALCTRL
Offset: 0x01
Reset: 0x00
Property: -

Bit	7	6	5	4	3	2	1	0
					SDAHOLD[1:0]		FMPEN	ENABLE
Access					R/W	R/W	R/W	R/W
Reset					0	0	0	0

Bits 3:2 – SDAHOLD[1:0] SDA Hold Time
These bits select the SDA hold time for the TWI Slave.
This bit field is ignored when the dual control is disabled.

Table 24-3. SDA Hold Time

SDAHOLD[1:0]	Nominal Hold Time [ns]	Hold Time Range Across all Corners [ns]	Description
0x0	0	0	Hold time OFF.
0x1	50	36 - 131	Backward compatible setting.
0x2	300	180 - 630	Meets SMBus specification under typical conditions.
0x3	500	300 - 1050	Meets SMBus specification across all corners.

Bit 1 – FMPEN FM Plus Enable
This bit selects the 1 MHz bus speed for the TWI Slave. This bit is ignored when dual control is disabled.

Bit 0 – ENABLE Dual Control Enable
Writing this bit to ‘1’ enables the TWI dual control.

24.5.3 Debug Control

Name: DBGCTRL
Offset: 0x02
Reset: 0x00
Property: -

Bit	7	6	5	4	3	2	1	0
								DBGRUN
Access								R/W
Reset								0

Bit 0 – DBGRUN Debug Run

Value	Description
0	The peripheral is halted in Break Debug mode and ignores events
1	The peripheral will continue to run in Break Debug mode when the CPU is halted

24.5.4 Master Control A

Name: MCTRLA
Offset: 0x03
Reset: 0x00
Property: -

Bit	7	6	5	4	3	2	1	0
	RIEN	WIEN		QCEN	TIMEOUT[1:0]		SMEN	ENABLE
Access	R/W	R/W		R/W	R/W	R/W	R/W	R/W
Reset	0	0		0	0	0	0	0

Bit 7 – RIEN Read Interrupt Enable
Writing this bit to '1' enables interrupt on the Master Read Interrupt Flag (RIF) in the Master Status register (TWIn.MSTATUS). A TWI Master read interrupt would be generated only if this bit, the RIF, and the Global Interrupt Flag (I) in CPU.SREG are all '1'.

Bit 6 – WIEN Write Interrupt Enable
Writing this bit to '1' enables interrupt on the Master Write Interrupt Flag (WIF) in the Master Status register (TWIn.MSTATUS). A TWI Master write interrupt will be generated only if this bit, the WIF, and the Global Interrupt Flag (I) in CPU.SREG are all '1'.

Bit 4 – QCEN Quick Command Enable
Writing this bit to '1' enables Quick Command. When Quick Command is enabled, the corresponding interrupt flag is set immediately after the slave acknowledges the address. At this point, the software can either issue a Stop command or a repeated Start by writing either the Command bits (CMD) in the Master Control B register (TWIn.MCTRLB) or the Master Address register (TWIn.MADDR).

Bits 3:2 – TIMEOUT[1:0] Inactive Bus Time-Out
Setting the inactive bus time-out (TIMEOUT) bits to a non-zero value will enable the inactive bus time-out supervisor. If the bus is inactive for longer than the TIMEOUT setting, the bus state logic will enter the Idle state.

Value	Name	Description
0x0	DISABLED	Bus time-out disabled. I^2C.
0x1	50US	50 µs - SMBus (assume baud is set to 100 kHz)
0x2	100US	100 µs (assume baud is set to 100 kHz)
0x3	200US	200 µs (assume baud is set to 100 kHz)

Bit 1 – SMEN Smart Mode Enable
Writing this bit to '1' enables the Master Smart mode. When Smart mode is enabled, the acknowledge action is sent immediately after reading the Master Data (TWIn.MDATA) register.

Bit 0 – ENABLE Enable TWI Master
Writing this bit to '1' enables the TWI as master.

24.5.5 Master Control B

Name: MCTRLB
Offset: 0x04
Reset: 0x00
Property: -

Bit	7	6	5	4	3	2	1	0
					FLUSH	ACKACT	MCMD[1:0]	
Access					R/W	R/W	R/W	R/W
Reset					0	0	0	0

Bit 3 – FLUSH Flush
Writing a '1' to this bit generates a strobe for one clock cycle disabling and then enabling the master.
Writing '0' has no effect.
The purpose is to clear the internal state of the master: For TWI master to transmit successfully, it is recommended to write the Master Address register (TWIn.MADDR) first and then the Master Data register (TWIn.MDATA).
The peripheral will transmit invalid data if TWIn.MDATA is written before TWIn.MADDR. To avoid this invalid transmission, write '1' to this bit to clear both registers.

Bit 2 – ACKACT Acknowledge Action
This bit defines the master's behavior under certain conditions defined by the bus protocol state and software interaction. The acknowledge action is performed when DATA is read, or when an execute command is written to the CMD bits.
The ACKACT bit is not a flag or strobe, but an ordinary read/write accessible register bit. The default ACKACT for master read interrupt is "Send ACK" (0). For master write, the code will know that no acknowledge should be sent since it is itself sending data.

Value	Description
0	Send ACK
1	Send NACK

Bits 1:0 – MCMD[1:0] Command
The master command bits are strobes. These bits are always read as zero.
Writing to these bits triggers a master operation as defined by the table below.

Table 24-4. Command Settings

MCMD[1:0]	DIR	Description
0x0	X	NOACT - No action
0x1	X	REPSTART - Execute Acknowledge Action succeeded by repeated Start.
0x2	0	RECVTRANS - Execute Acknowledge Action succeeded by a byte read operation.
	1	Execute Acknowledge Action (no action) succeeded by a byte send operation.(1)
0x3	X	STOP - Execute Acknowledge Action succeeded by issuing a Stop condition.

Note:
1. For a master being a sender, it will normally wait for new data written to the Master Data register (TWIn.MDATA).

The acknowledge action bits and command bits can be written at the same time.

24.5.6 Master Status

Name: MSTATUS
Offset: 0x05
Reset: 0x00
Property: -

Normal TWI operation dictates that this register is regarded purely as a read-only register. Clearing any of the status flags is done indirectly by accessing the Master Transmits Address (TWIn.MADDR), Master Data register (TWIn.MDATA), or the Command bits (CMD) in the Master Control B register (TWIn.MCTRLB).

Bit	7	6	5	4	3	2	1	0
	RIF	WIF	CLKHOLD	RXACK	ARBLOST	BUSERR	BUSSTATE[1:0]	
Access	R/W	R/W	R/W	R	R/W	R/W	R/W	R/W
Reset	0	0	0	0	0	0	0	0

Bit 7 – RIF Read Interrupt Flag
This bit is set to ‘1’ when the master byte read operation is successfully completed (i.e., no arbitration lost or bus error occurred during the operation). The read operation is triggered by software reading DATA or writing to ADDR registers with bit ADDR[0] written to ‘1’. A slave device must have responded with an ACK to the address and direction byte transmitted by the master for this flag to be set.
Writing a ‘1’ to this bit will clear the RIF. However, normal use of the TWI does not require the flag to be cleared by this method.
Clearing the RIF bit will follow the same software interaction as the CLKHOLD flag.
The RIF flag can generate a master read interrupt (see description of the RIEN control bit in the TWIn.MCTRLA register).

Bit 6 – WIF Write Interrupt Flag
This bit is set when a master transmit address or byte write is completed, regardless of the occurrence of a bus error or an arbitration lost condition.
Writing a ‘1’ to this bit will clear the WIF. However, normal use of the TWI does not require the flag to be cleared by this method.
Clearing the WIF bit will follow the same software interaction as the CLKHOLD flag.
The WIF flag can generate a master write interrupt (see description of the WIEN control bit in the TWIn.MCTRLA register).

Bit 5 – CLKHOLD Clock Hold
If read as ‘1’, this bit indicates that the master is currently holding the TWI clock (SCL) low, stretching the TWI clock period.
Writing a ‘1’ to this bit will clear the CLKHOLD flag. However, normal use of the TWI does not require the CLKHOLD flag to be cleared by this method, since the flag is automatically cleared when accessing several other TWI registers.
The CLKHOLD flag can be cleared by:

1. Writing a ‘1’ to it.
2. Writing to the TWIn.MADDR register.
3. Writing to the TWIn.MDATA register.
4. Reading the TWIn.DATA register while the ACKACT control bits in TWIn.MCTRLB are set to either send ACK or NACK.
5. Writing a valid command to the TWIn.MCTRLB register.

Bit 4 – RXACK Received Acknowledge
This bit is read-only and contains the most recently received Acknowledge bit from the slave. When read as ‘0’, the most recent acknowledge bit from the slave was ACK. When read as ‘1’, the most recent acknowledge bit was NACK.

Bit 3 – ARBLOST Arbitration Lost
If read as ‘1’ this bit indicates that the master has lost arbitration while transmitting a high data or NACK bit, or while issuing a Start or Repeated Start condition (S/Sr) on the bus.

Writing a '1' to it will clear the ARBLOST flag. However, normal use of the TWI does not require the flag to be cleared by this method. However, as for the CLKHOLD flag, clearing the ARBLOST flag is not required during normal use of the TWI.
Clearing the ARBLOST bit will follow the same software interaction as the CLKHOLD flag.
Given the condition where the bus ownership is lost to another master, the software must either abort the operation or resend the data packet. Either way, the next required software interaction is in both cases to write to the TWIn.MADDR register. A write access to the TWIn.MADDR register will then clear the ARBLOST flag.

Bit 2 – BUSERR Bus Error
The BUSERR flag indicates that an illegal bus condition has occurred. An illegal bus condition is detected if a protocol violating Start (S), repeated Start (Sr), or Stop (P) is detected on the TWI bus lines. A Start condition directly followed by a Stop condition is one example of protocol violation.
Writing a '1' to this bit will clear the BUSERR. However, normal use of the TWI does not require the BUSERR to be cleared by this method.
A robust TWI driver software design will treat the bus error flag similarly to the ARBLOST flag, assuming the bus ownership is lost when the bus error flag is set. As for the ARBLOST flag, the next software operation of writing the TWIn.MADDR register will consequently clear the BUSERR flag. For bus error to be detected, the bus state logic must be enabled and the system frequency must be 4x the SCL frequency.

Bits 1:0 – BUSSTATE[1:0] Bus State
These bits indicate the current TWI bus state as defined in the table below. After a system reset or re-enabling, the TWI master bus state will be unknown. The change of bus state is dependent on bus activity.
Writing 0x1 to the BUSSTATE bits forces the bus state logic into its Idle state. However, the bus state logic cannot be forced into any other state. When the master is disabled, the bus state is 'unknown'.

Value	Name	Description
0x0	UNKNOWN	Unknown bus state
0x1	IDLE	Bus is idle
0x2	OWNER	This TWI controls the bus
0x3	BUSY	The bus is busy

24.5.7 Master Baud Rate

Name: MBAUD
Offset: 0x06
Reset: 0x00
Property: -

Bit	7	6	5	4	3	2	1	0
	BAUD[7:0]							
Access	R/W	R/W	R/W	R/W	R/W	R/W	R/W	R/W
Reset	0	0	0	0	0	0	0	0

Bits 7:0 – BAUD[7:0] Baud Rate
This bit field is used to derive the SCL high and low time and should be written while the master is disabled (ENABLE bit in TWIn.MCTRLA is '0').
For more information on how to calculate the frequency, see the Clock Generation section.

24.5.8 Master Address

Name: MADDR
Offset: 0x07
Reset: 0x00
Property: -

Bit	7	6	5	4	3	2	1	0
	ADDR[7:0]							
Access	R/W	R/W	R/W	R/W	R/W	R/W	R/W	R/W
Reset	0	0	0	0	0	0	0	0

Bits 7:0 – ADDR[7:0] Address
When this bit field is written, a Start condition and slave address protocol sequence is initiated dependent on the bus state.
If the bus state is unknown the Master Write Interrupt Flag (WIF) and Bus Error flag (BUSERR) in the Master Status register (TWIn.MSTATUS) are set and the operation is terminated.
If the bus is busy the master awaits further operation until the bus becomes idle. When the bus is or becomes idle, the master generates a Start condition on the bus, copies the ADDR value into the Data Shift register (TWIn.MDATA) and performs a byte transmit operation by sending the contents of the Data register onto the bus. The master then receives the response (i.e., the Acknowledge bit from the slave). After completing the operation the bus clock (SCL) is forced and held low only if arbitration was not lost. The CLKHOLD bit in the Master Setup register (TWIn.MSETUP) is set accordingly. Completing the operation sets the WIF in the Master Status register (TWIn.MSTATUS).
If the bus is already owned, a repeated Start (Sr) sequence is performed. In two ways the repeated Start (Sr) sequence deviates from the Start sequence. Firstly, since the bus is already owned by the master, no wait for idle bus state is necessary. Secondly, if the previous transaction was a read, the acknowledge action is sent before the Repeated Start bus condition is issued on the bus.
The master receives one data byte from the slave before the master sets the Master Read Interrupt Flag (RIF) in the Master Status register (TWIn.MSTATUS). All TWI Master flags are cleared automatically when this bit field is written. This includes bus error, arbitration lost, and both master interrupt flags.
This register can be read at any time without interfering with ongoing bus activity, since a read access does not trigger the master logic to perform any bus protocol related operations.
The master control logic uses bit 0 of the TWIn.MADDR register as the bus protocol's Read/Write flag (R/$\overline{W}$).

24.5.9 Master DATA

Name: MDATA
Offset: 0x08
Reset: 0x00
Property: -

Bit	7	6	5	4	3	2	1	0
	DATA[7:0]							
Access	R/W	R/W	R/W	R/W	R/W	R/W	R/W	R/W
Reset	0	0	0	0	0	0	0	0

Bits 7:0 – DATA[7:0] Data
The bit field gives direct access to the master's physical Shift register which is used both to shift data out onto the bus (write) and to shift in data received from the bus (read).
The direct access implies that the Data register cannot be accessed during byte transmissions. Built-in logic prevents any write access to this register during the shift operations. Reading valid data or writing data to be transmitted can only be successfully done when the bus clock (SCL) is held low by the master (i.e., when the CLKHOLD bit in the Master Status register (TWIn.MSTATUS) is set). However, it is not necessary to check the CLKHOLD bit in software before accessing this register if the software keeps track of the present protocol state by using interrupts or observing the interrupt flags.
Accessing this register assumes that the master clock hold is active, auto-triggers bus operations dependent of the state of the Acknowledge Action Command bit (ACKACT) in TWIn.MSTATUS and type of register access (read or write).
A write access to this register will, independent of ACKACT in TWIn.MSTATUS, command the master to perform a byte transmit operation on the bus directly followed by receiving the Acknowledge bit from the slave. When the Acknowledge bit is received, the Master Write Interrupt Flag (WIF) in TWIn.MSTATUS is set regardless of any bus errors or arbitration. If operating in a multi-master environment, the interrupt handler or application software must check the Arbitration Lost Status Flag (ARBLOST) in TWIn.MSTATUS before continuing from this point. If the arbitration was lost, the application software must decide to either abort or to resend the packet by rewriting this register. The entire operation is performed (i.e., all bits are clocked), regardless of winning or losing arbitration before the write interrupt flag is set. When arbitration is lost, only '1's are transmitted for the remainder of the operation, followed by a write interrupt with ARBLOST flag set.
Both TWI Master Interrupt Flags are cleared automatically when this register is written. However, the Master Arbitration Lost and Bus Error flags are left unchanged.
Reading this register triggers a bus operation, dependent on the setting of the Acknowledge Action Command bit (ACKACT) in TWIn.MSTATUS. Normally the ACKACT bit is preset to either ACK or NACK before the register read operation. If ACK or NACK action is selected, the transmission of the acknowledge bit precedes the release of the clock hold. The clock is released for one byte, allowing the slave to put one byte of data on the bus. The Master Read Interrupt flag RIF in TWIn.MSTATUS is then set if the procedure was successfully executed. However, if arbitration was lost when sending NACK, or a bus error occurred during the time of operation, the Master Write Interrupt flag (WIF) is set instead. Observe that the two Master Interrupt Flags are mutually exclusive (i.e., both flags will not be set simultaneously).
Both TWI Master Interrupt Flags are cleared automatically if this register is read while ACKACT is set to either ACK or NACK. However, arbitration lost and bus error flags are left unchanged.

24.5.10 Slave Control A

Name: SCTRLA
Offset: 0x09
Reset: 0x00
Property: -

Bit	7	6	5	4	3	2	1	0
	DIEN	APIEN	PIEN			PMEN	SMEN	ENABLE
Access	R/W	R/W	R/W			R/W	R/W	R/W
Reset	0	0	0			0	0	0

Bit 7 – DIEN Data Interrupt Enable
Writing this bit to '1' enables interrupt on the Slave Data Interrupt Flag (DIF) in the Slave Status register (TWIn.SSTATUS). A TWI slave data interrupt will be generated only if this bit, the DIF, and the Global Interrupt Flag (I) in CPU.SREG are all '1'.

Bit 6 – APIEN Address or Stop Interrupt Enable
Writing this bit to '1' enables interrupt on the Slave Address or Stop Interrupt Flag (APIF) in the Slave Status register (TWIn.SSTATUS). A TWI slave Address or Stop interrupt will be generated only if this bit, APIF, and the Global Interrupt Flag (I) in CPU.SREG are all '1'.
The slave stop interrupt shares the interrupt flag and vector with the slave address interrupt. The TWIn.SCTRAL.PIEN must be written to '1' in order for the APIF to be set on a stop condition and when the interrupt occurs the TWIn.SSTATUS.AP bit will determine whether an address match or a stop condition caused the interrupt.

Bit 5 – PIEN Stop Interrupt Enable
Writing this bit to '1' enables APIF to be set when a Stop condition occurs. To use this feature the system frequency must be 4x the SCL frequency.

Bit 2 – PMEN Address Recognition Mode
If this bit is written to '1', the slave address match logic responds to all received addresses.
If this bit is written to '0', the address match logic uses the Slave Address register (TWIn.SADDR) to determine which address to recognize as the slave's own address.

Bit 1 – SMEN Smart Mode Enable
Writing this bit to '1' enables the slave Smart mode. When the Smart mode is enabled, issuing a command with CMD or reading/writing DATA resets the interrupt and operation continues. If the Smart mode is disabled, the slave always waits for a CMD command before continuing.

Bit 0 – ENABLE Enable TWI Slave
Writing this bit to '1' enables the TWI slave.

24.5.11 Slave Control B

Name: SCTRLB
Offset: 0x0A
Reset: 0x00
Property: -

Bit	7	6	5	4	3	2	1	0
						ACKACT	SCMD[1:0]	
Access						R/W	R/W	R/W
Reset						0	0	0

Bit 2 – ACKACT Acknowledge Action
This bit defines the slave's behavior under certain conditions defined by the bus protocol state and software interaction. The table below lists the acknowledge procedure performed by the slave if action is initiated by software. The acknowledge action is performed when TWIn.SDATA is read or written, or when an execute command is written to the CMD bits in this register.
The ACKACT bit is not a flag or strobe, but an ordinary read/write accessible register bit.

Value	Name	Description
0	ACK	Send ACK
1	NACK	Send NACK

Bits 1:0 – SCMD[1:0] Command
Unlike the acknowledge action bits, the Slave command bits are strobes. These bits always read as zero. Writing to these bits trigger a slave operation as defined in the table below.

Table 24-5. Command Settings

SCMD[1:0]	DIR	Description
0x0	X	NOACT - No action
0x1	X	Reserved
0x2 - COMPTRANS	Used to complete a transaction.	
	0	Execute Acknowledge Action succeeded by waiting for any Start (S/Sr) condition.
	1	Wait for any Start (S/Sr) condition.
0x3 - RESPONSE	Used in response to an address interrupt (APIF).	
	0	Execute Acknowledge Action succeeded by reception of next byte.
	1	Execute Acknowledge Action succeeded by slave data interrupt.
	Used in response to a data interrupt (DIF).	
	0	Execute Acknowledge Action succeeded by reception of next byte.
	1	Execute a byte read operation followed by Acknowledge Action.

The acknowledge action bits and command bits can be written at the same time.

24.5.12 Slave Status

Name: SSTATUS
Offset: 0x0B
Reset: 0x00
Property: -

Normal TWI operation dictates that the Slave Status register should be regarded purely as a read-only register. Clearing any of the status flags will indirectly be done when accessing the Slave Data (TWIn.SDATA) register or the CMD bits in the Slave Control B register (TWIn.SCTRLB).

Bit	7	6	5	4	3	2	1	0
	DIF	APIF	CLKHOLD	RXACK	COLL	BUSERR	DIR	AP
Access	R/W	R/W	R	R	R/W	R/W	R	R
Reset	0	0	0	0	0	0	0	0

Bit 7 – DIF Data Interrupt Flag
This flag is set when a slave byte transmit or byte receive operation is successfully completed without any bus error. The flag can be set with an unsuccessful transaction in case of collision detection (see the description of the COLL Status bit). Writing a '1' to its bit location will clear the DIF. However, normal use of the TWI does not require the DIF flag to be cleared by using this method, since the flag is automatically cleared when:

1. Writing to the Slave DATA register.
2. Reading the Slave DATA register.
3. Writing a valid command to the CTRLB register.

The DIF flag can be used to generate a slave data interrupt (see the description of the DIEN control bit in TWIn.CTRLA).

Bit 6 – APIF Address or Stop Interrupt Flag
This flag is set when the slave address match logic detects that a valid address has been received or by a Stop condition. Writing a '1' to its bit location will clear the APIF. However, normal use of the TWI does not require the flag to be cleared by this method since the flag is cleared using the same software interactions as described for the DIF flag.
The APIF flag can be used to generate a slave address or stop interrupt (see the description of the AIEN control bit in TWIn.CTRLA). Take special note of that the slave stop interrupt shares the interrupt vector with the slave address interrupt.

Bit 5 – CLKHOLD Clock Hold
If read as '1', the slave clock hold flag indicates that the slave is currently holding the TWI clock (SCL) low, stretching the TWI clock period. This is a read-only bit that is set when an address or data interrupt is set. Resetting the corresponding interrupt will indirectly reset this flag.

Bit 4 – RXACK Received Acknowledge
This bit is read-only and contains the most recently received Acknowledge bit from the master. When read as '0', the most recent acknowledge bit from the master was ACK. When read as '1', the most recent acknowledge bit was NACK.

Bit 3 – COLL Collision
If read as '1', the transmit collision flag indicates that the slave has not been able to transmit a high data or NACK bit. If a slave transmit collision is detected, the slave will commence its operation as normal, except no low values will be shifted out onto the SDA line (i.e., when the COLL flag is set to '1' it disables the data and acknowledge output from the slave logic). The DIF flag will be set to '1' at the end as a result of the internal completion of an unsuccessful transaction. Similarly, when a collision occurs because the slave has not been able to transmit a NACK bit, it means the address match already happened and the APIF flag is set as a result. APIF/DIF flags can only generate interrupts whose handlers can be used to check for the collision. Writing a '1' to its bit location will clear the COLL flag. However, the flag is automatically cleared if any Start condition (S/Sr) is detected.
This flag is intended for systems where the address resolution protocol (ARP) is employed. However, a detected collision in non-ARP situations indicates that there has been a protocol violation and should be treated as a bus error.

Bit 2 – BUSERR Bus Error
The BUSERR flag indicates that an illegal bus condition has occurred. An illegal bus condition is detected if a protocol violating Start (S), Repeated Start (Sr), or Stop (P) is detected on the TWI bus lines. A Start condition directly followed by a Stop condition is one example of protocol violation. Writing a '1' to its bit location will clear the BUSERR flag. However, normal use of the TWI does not require the BUSERR to be cleared by this method. A robust TWI driver software design will assume that the entire packet of data has been corrupted and will restart by waiting for a new Start condition (S). The TWI bus error detector is part of the TWI Master circuitry. For bus errors to be detected, the TWI Master must be enabled (ENABLE bit in TWIn.MCTRLA is '1'), and the system clock frequency must be at least four times the SCL frequency.

Bit 1 – DIR Read/Write Direction
This bit is read-only and indicates the current bus direction state. The DIR bit reflects the direction bit value from the last address packet received from a master TWI device. If this bit is read as '1', a master read operation is in progress. Consequently, a '0' indicates that a master write operation is in progress.

Bit 0 – AP Address or Stop
When the TWI slave address or Stop Interrupt Flag (APIF) is set, this bit determines whether the interrupt is due to address detection or a Stop condition.

Value	Name	Description
0	STOP	A Stop condition generated the interrupt on APIF
1	ADR	Address detection generated the interrupt on APIF

24.5.13 Slave Address

Name: SADDR
Offset: 0x0C
Reset: 0x00
Property: -

Bit	7	6	5	4	3	2	1	0
	ADDR[7:0]							
Access	R/W	R/W	R/W	R/W	R/W	R/W	R/W	R/W
Reset	0	0	0	0	0	0	0	0

Bits 7:0 – ADDR[7:0] Address
The Slave Address register in combination with the Slave Address Mask register (TWIn.SADDRMASK) is used by the slave address match logic to determine if a master TWI device has addressed the TWI slave. The Slave Address Interrupt Flag (APIF) is set to '1' if the received address is recognized. The slave address match logic supports recognition of 7- and 10-bits addresses, and general call address.
When using 7-bit or 10-bit Address Recognition mode, the upper seven bits of the Address register (ADDR[7:1]) represents the slave address and the Least Significant bit (ADDR[0]) is used for general call address recognition. Setting the ADDR[0] bit, in this case, enables the general call address recognition logic. The TWI slave address match logic only supports recognition of the first byte of a 10-bit address (i.e., by setting ADDRA[7:1] = "0b11110aa" where "aa" represents bit 9 and 8, or the slave address). The second 10-bit address byte must be handled by software.

24.5.14 Slave Data

Name: SDATA
Offset: 0x0D
Reset: 0x00
Property: -

Bit	7	6	5	4	3	2	1	0
	DATA[7:0]							
Access	R/W	R/W	R/W	R/W	R/W	R/W	R/W	R/W
Reset	0	0	0	0	0	0	0	0

Bits 7:0 – DATA[7:0] Data
The Slave Data register I/O location (DATA) provides direct access to the slave's physical Shift register, which is used both to shift data out onto the bus (transmit) and to shift in data received from the bus (receive). The direct access implies that the Data register cannot be accessed during byte transmissions. Built-in logic prevents any write accesses to the Data register during the shift operations. Reading valid data or writing data to be transmitted can only be successfully done when the bus clock (SCL) is held low by the slave (i.e., when the slave CLKHOLD bit is set). However, it is not necessary to check the CLKHOLD bit in software before accessing the slave DATA register if the software keeps track of the present protocol state by using interrupts or observing the interrupt flags. Accessing the slave DATA register, assumed that clock hold is active, auto-trigger bus operations dependent of the state of the Slave Acknowledge Action Command bits (ACKACT) and type of register access (read or write).

24.5.15 Slave Address Mask

Name: SADDRMASK
Offset: 0x0E
Reset: 0x00
Property: -

Bit	7	6	5	4	3	2	1	0
	ADDRMASK[6:0]							ADDREN
Access	R/W	R/W	R/W	R/W	R/W	R/W	R/W	R/W
Reset	0	0	0	0	0	0	0	0

Bits 7:1 – ADDRMASK[6:0] Address Mask
The ADDRMASK register acts as a second address match register, or an address mask register depending on the ADDREN setting.
If ADDREN is written to '0', ADDRMASK can be loaded with a 7-bit Slave Address mask. Each of the bits in the TWIn.SADDRMASK register can mask (disable) the corresponding address bits in the TWI slave Address Register (TWIn.SADDR). If the mask bit is written to '1' then the address match logic ignores the compare between the incoming address bit and the corresponding bit in slave TWIn.SADDR register. In other words, masked bits will always match.
If ADDREN is written to '1', the TWIn.SADDRMASK can be loaded with a second slave address in addition to the TWIn.SADDR register. In this mode, the slave will match on two unique addresses, one in TWIn.SADDR and the other in TWIn.SADDRMASK.

Bit 0 – ADDREN Address Mask Enable
If this bit is written to '1', the slave address match logic responds to the two unique addresses in slave TWIn.SADDR and TWIn.SADDRMASK.
If this bit is '0', the TWIn.SADDRMASK register acts as a mask to the TWIn.SADDR register.

25. CRCSCAN - Cyclic Redundancy Check Memory Scan

25.1 Features

- CRC-16-CCITT
- Check of the entire Flash section, application code, and/or boot section
- Selectable NMI trigger on failure
- User configurable check during internal reset initialization

25.2 Overview

A Cyclic Redundancy Check (CRC) takes a data stream of bytes from the NVM (either the entire Flash, only the Boot section, or both application code and Boot section) and generates a checksum. The CRC peripheral (CRCSCAN) can be used to detect errors in the program memory:

The last location in the section to check has to contain the correct pre-calculated 16-bit checksum for comparison. If the checksum calculated by the CRCSCAN and the pre-calculated checksums match, a status bit in the CRCSCAN is set. If they do not match, the status register will indicate that it failed. The user can choose to let the CRCSCAN generate a non-maskable interrupt (NMI) if the checksums do not match.

An *n*-bit CRC, applied to a data block of arbitrary length, will detect any single alteration (error burst) up to *n* bits in length. For longer error bursts, a fraction $1-2^{-n}$ will be detected.

The CRC-generator supports CRC-16-CCITT.

Polynomial:

- CRC-16-CCITT: $x^{16} + x^{12} + x^5 + 1$

The CRC reads in byte-by-byte of the content of the section(s) it is set up to check, starting with byte 0, and generates a new checksum per byte. The byte is sent through a shift register as depicted below, starting with the most significant bit. If the last bytes in the section contain the correct checksum, the CRC will pass. See 25.3.2.1 Checksum for how to place the checksum. The initial value of the checksum register is 0xFFFF.

Figure 25-1. CRC Implementation Description

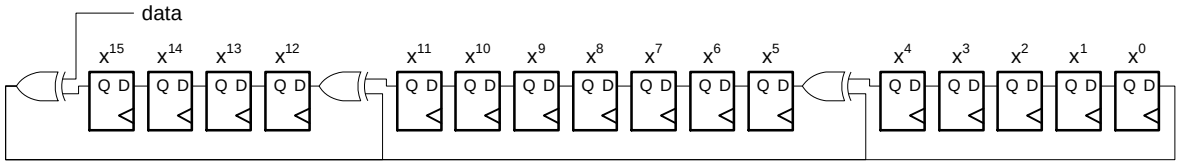

25.2.1 Block Diagram

Figure 25-2. Cyclic Redundancy Check Block Diagram

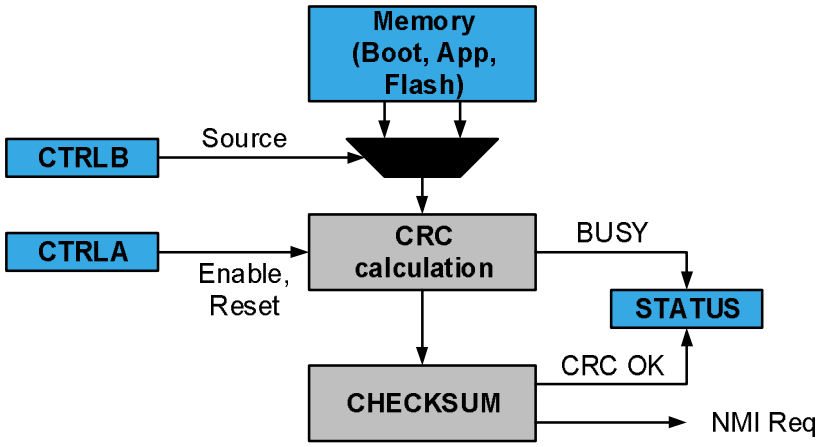

25.3 Functional Description

25.3.1 Initialization

To enable a CRC in software (or via the debugger):

1. Write the Source (SRC) bit field of the Control B register (CRCSCAN.CTRLB) to select the desired mode and source settings.
2. Enable the CRCSCAN by writing a '1' to the ENABLE bit in the Control A register (CRCSCAN.CTRLA).
3. The CRC will start after three cycles. The CPU will continue executing during these three cycles.

The CRCSCAN can be configured to perform a code memory scan before the device leaves reset. If this check fails, the CPU is not allowed to start normal code execution. This feature is enabled and controlled by the CRCSRC field in FUSE.SYSCFG0, see the "Fuses" chapter for more information.

If this feature is enabled, a successful CRC check will have the following outcome:

- Normal code execution starts
- The ENABLE bit in CRCSCAN.CTRLA will be '1'
- The SRC bit field in CRCSCAN.CTRLB will reflect the checked section(s)
- The OK flag in CRCSCAN.STATUS will be '1'

If this feature is enabled, a non-successful CRC check will have the following outcome:

- Normal code execution does not start, the CPU will hang executing no code
- The ENABLE bit in CRCSCAN.CTRLA will be '1'
- The SRC bit field in CRCSCAN.CTRLB will reflect the checked section(s)
- The OK flag in CRCSCAN.STATUS will be '0'
- This condition can be observed using the debug interface

25.3.2 Operation

The CRC is operating in Priority mode: the CRC peripheral has priority access to the Flash and will stall the CPU until completed.

In Priority mode, the CRC fetches a new word (16-bit) on every third main clock cycle, or when the CRC peripheral is configured to do a scan from startup.

25.3.2.1 Checksum

The pre-calculated checksum must be present in the last location of the section to be checked. If the BOOT section should be checked, the checksum must be saved in the last bytes of the BOOT section, and similarly for APPLICATION and entire Flash. Table 25-1 shows explicitly how the checksum should be stored for the different

sections. Also, see the CRCSCAN.CTRLB register description for how to configure which section to check and the device fuse description for how to configure the BOOTEND and APPEND fuses.

Table 25-1. Placement the Pre-Calculated Checksum in Flash

Section to Check	CHECKSUM[15:8]	CHECKSUM[7:0]
BOOT	FUSE_BOOTEND*256-2	FUSE_BOOTEND*256-1
BOOT and APPLICATION	FUSE_APPEND*256-2	FUSE_APPEND*256-1
Full Flash	FLASHEND-1	FLASHEND

25.3.3 Interrupts

Table 25-2. Available Interrupt Vectors and Sources

Name	Vector Description	Conditions
NMI	Non-Maskable Interrupt	Generated on CRC failure

When the interrupt condition occurs, the OK flag in the Status register (CRCSCAN.STATUS) is cleared to '0'.

An interrupt is enabled by writing a '1' to the respective Enable bit (NMIEN) in the Control A register (CRCSCAN.CTRLA), but can only be disabled with a system Reset. An NMI is generated when the OK flag in CRCSCAN.STATUS is cleared and the NMIEN bit is '1'. The NMI request remains active until a system Reset, and cannot be disabled.

A non-maskable interrupt can be triggered even if interrupts are not globally enabled.

25.3.4 Sleep Mode Operation

CTCSCAN is halted in all sleep modes. In all CPU Sleep modes, the CRCSCAN peripheral is halted and will resume operation when the CPU wakes up.

The CRCSCAN starts operation three cycles after writing the EN bit in CRCSCAN.CTRLA. During these three cycles, it is possible to enter Sleep mode. In this case:

1. The CRCSCAN will not start until the CPU is woken up.
2. Any interrupt handler will execute after CRCSCAN has finished.

25.3.5 Debug Operation

Whenever the debugger accesses the device, for instance, reading or writing a peripheral or memory location, the CRCSCAN peripheral will be disabled.

If the CRCSCAN is busy when the debugger accesses the device, the CRCSCAN will restart the ongoing operation when the debugger accesses an internal register or when the debugger disconnects.

The BUSY bit in the Status register (CRCSCAN.STATUS) will read '1' if the CRCSCAN was busy when the debugger caused it to disable, but it will not actively check any section as long as the debugger keeps it disabled. There are synchronized CRC Status bits in the debugger's internal register space, which can be read by the debugger without disabling the CRCSCAN. Reading the debugger's internal CRC status bits will make sure that the CRCSCAN is enabled.

It is possible to write the CRCSCAN.STATUS register directly from the debugger:

- BUSY bit in CRCSCAN.STATUS:
  - Writing the BUSY bit to '0' will stop the ongoing CRC operation (so that the CRCSCAN does not restart its operation when the debugger allows it).
  - Writing the BUSY bit to '1' will make the CRC start a single check with the settings in the Control B register (CRCSCAN.CTRLB), but not until the debugger allows it.

  As long as the BUSY bit in CRCSCAN.STATUS is '1', CRCSCAN.CRCTRLB and the Non-Maskable Interrupt Enable bit (NMIEN) in the Control A register (CRCSCAN.CTRLA) cannot be altered.
- OK bit in CRCSCAN.STATUS:

- Writing the OK bit to '0' can trigger a Non-Maskable Interrupt (NMI) if the NMIEN bit in CRCSCAN.CTRLA is '1'. If an NMI has been triggered, no writes to the CRCSCAN are allowed.
- Writing the OK bit to '1' will make the OK bit read as '1' when the BUSY bit in CRCSCAN.STATUS is '0'.

Writes to CRCSCAN.CTRLA and CRCSCAN.CTRLB from the debugger are treated in the same way as writes from the CPU.

25.4 Register Summary - CRCSCAN

Offset	Name	Bit Pos.								
0x00	CTRLA	7:0	RESET						NMIEN	ENABLE
0x01	CTRLB	7:0							SRC[1:0]	
0x02	STATUS	7:0							OK	BUSY

25.5 Register Description

25.5.1 Control A

Name: CTRLA
Offset: 0x00
Reset: 0x00
Property: -

If an NMI has been triggered, this register is not writable.

Bit	7	6	5	4	3	2	1	0
	RESET						NMIEN	ENABLE
Access	R/W						R/W	R/W
Reset	0						0	0

Bit 7 – RESET Reset CRCSCAN
Writing this bit to ’1’ resets the CRCSCAN peripheral: The CRCSCAN Control registers and Status register (CRCSCAN.CTRLA, CRCSCAN.CTRLB, CRCSCAN.STATUS) will be cleared one clock cycle after the RESET bit was written to ’1’.
If NMIEN is ’0’, this bit is writable both when the CRCSCAN is busy (the BUSY bit in CRCSCAN.STATUS is ’1’) and not busy (the BUSY bit is ’0’) and will take effect immediately.
If NMIEN is ’1’, this bit is only writable when the CRCSCAN is not busy (the BUSY bit in CRCSCAN.STATUS is ’0’).
The RESET bit is a strobe bit.

Bit 1 – NMIEN Enable NMI Trigger
When this bit is written to ’1’, any CRC failure will trigger an NMI.
This can only be cleared by a system Reset - it is not cleared by a write to the RESET bit.
This bit can only be written to ’1’ when the CRCSCAN is not busy (the BUSY bit in CRCSCAN.STATUS is ’0’).

Bit 0 – ENABLE Enable CRCSCAN
Writing this bit to ’1’ enables the CRCSCAN peripheral with the current settings. It will stay ’1’ even after a CRC check has completed, but writing it to ‘1’ again will start a new check.
Writing the bit to ’0’ will disable the CRCSCAN after the ongoing check is completed (after reaching the end of the section it is set up to check). This is the preferred way to stop a continuous background check. A failure in the ongoing check will still be detected and can cause an NMI if the NMIEN bit is ’1’.
The CRCSCAN can be configured to run a scan during the MCU startup sequence to verify Flash sections before letting the CPU start normal code execution (see the “Initialization” section). If this feature is enabled, the ENABLE bit will read as ’1’ when normal code execution starts.
To see whether the CRCSCAN peripheral is busy with an ongoing check, poll the Busy bit (BUSY) in the Status register (CRCSCAN.STATUS).

25.5.2 Control B

Name: CTRLB
Offset: 0x01
Reset: 0x00
Property: -

The CRCSCAN.CTRLB register contains the mode and source settings for the CRC. It is not writable when the CRC is busy or when an NMI has been triggered.

Bit	7	6	5	4	3	2	1	0
							SRC[1:0]	
Access							R/W	R/W
Reset							0	0

Bits 1:0 – SRC[1:0] CRC Source
The SRC bit field selects which section of the Flash the CRC module should check. To set up section sizes, refer to the fuse description.
The CRC can be enabled during internal reset initialization to verify Flash sections before letting the CPU start (see the “Fuses” chapter). If the CRC is enabled during internal reset initialization, the SRC bit field will read out as FLASH, BOOTAPP, or BOOT when normal code execution starts (depending on the configuration).

Value	Name	Description
0x0	FLASH	The CRC is performed on the entire Flash (boot, application code, and application data sections).
0x1	BOOTAPP	The CRC is performed on the boot and application code sections of Flash.
0x2	BOOT	The CRC is performed on the boot section of Flash.
0x3	-	Reserved.

25.5.3 Status

Name: STATUS
Offset: 0x02
Reset: 0x02
Property: -

The status register contains the busy and OK information. It is not writable, only readable.

Bit	7	6	5	4	3	2	1	0
							OK	BUSY
Access							R	R
Reset							1	0

Bit 1 – OK CRC OK
When this bit is read as ‘1’, the previous CRC completed successfully. The bit is set to ’1’ from Reset but is cleared to ‘0’ when enabling the CRCSCAN. As long as the CRC module is busy, it will read ‘0’. When running continuously, the CRC status must be assumed OK until it fails or is stopped by the user.

Bit 0 – BUSY CRC Busy
When this bit is read as ‘1’, the CRC module is busy. As long as the module is busy, the access to the control registers is limited.

26. CCL – Configurable Custom Logic

26.1 Features

- Glue Logic for General Purpose PCB Design
- 4 Programmable Look-Up Tables (LUTs)
- Combinatorial Logic Functions: Any Logic Expression which is a Function of up to Three Inputs.
- Sequencer Logic Functions:
  - Gated D flip-flop
  - JK flip-flop
  - Gated D latch
  - RS latch
- Flexible LUT Input Selection:
  - I/Os
  - Events
  - Subsequent LUT output
  - Internal peripherals such as:
    - Analog comparator
    - Timers/Counters
    - USART
    - SPI
- Clocked by a System Clock or other Peripherals
- Output can be Connected to I/O Pins or an Event System
- Optional Synchronizer, Filter, or Edge Detector Available on Each LUT Output
- Optional Interrupt Generation from Each LUT Output:
  - Rising edge
  - Falling edge
  - Both edges

26.2 Overview

The Configurable Custom Logic (CCL) is a programmable logic peripheral which can be connected to the device pins, to events, or to other internal peripherals. The CCL can serve as ‘glue logic’ between the device peripherals and external devices. The CCL can eliminate the need for external logic components, and can also help the designer to overcome real-time constraints by combining Core Independent Peripherals (CIPs) to handle the most time-critical parts of the application independent of the CPU.

The CCL peripheral provides a number of Look-up Tables (LUTs). Each LUT consists of three inputs, a truth table, a synchronizer/filter, and an edge detector. Each LUT can generate an output as a user programmable logic expression with three inputs. The output is generated from the inputs using the combinatorial logic and can be filtered to remove spikes. The CCL can be configured to generate an interrupt request on changes in the LUT outputs.

Neighboring LUTs can be combined to perform specific operations. A sequencer can be used for generating complex waveforms.

26.2.1 Block Diagram

Figure 26-1. Configurable Custom Logic

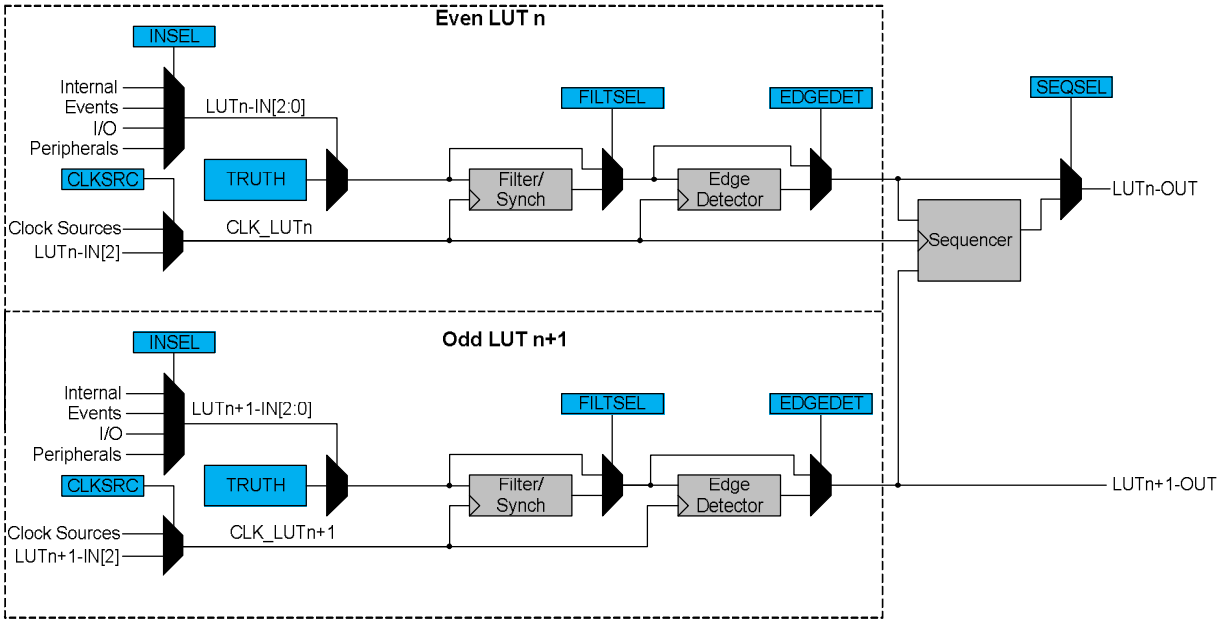

Table 26-2. Sequencer and LUT Connection

Sequencer	Even and Odd LUT
SEQ0	LUT0 and LUT1
SEQ1	LUT2 and LUT3

26.2.2 Signal Description

Name	Type	Description
LUTn-OUT	Digital output	Output from the look-up table
LUTn-IN[2:0]	Digital input	Input to the look-up table. LUTn-IN[2] can serve as CLK_LUTn.

Refer to *I/O Multiplexing and Considerations* for details on the pin mapping for this peripheral. One signal can be mapped to several pins.

26.2.2.1 CCL Input Selection MUX

The following peripherals outputs are available as inputs into the CCL LUT.

Value	Input source	INSEL0	INSEL1	INSEL2
0x00	MASK	None		
0x01	FEEDBACK	LUTn		
0x02	LINK	LUT(n+1)		
0x03	EVENTA	Event input source A		
0x04	EVENTB	Event input source B		
0x05	IO	IN0	IN1	IN2
0x06	AC	AC0 OUT		
0x07	-			

.....continued

Value	Input source	INSEL0	INSEL1	INSEL2
0x08	USART	USART0 TXD	USART1 TXD	USART2 TXD
0x09	SPI	SPI0 MOSI	SPI0 MOSI	SPI0 SCK
0x0A	TCA0	WO0	WO1	WO2
0x0B	-			
0x0C	TCB	TCB0 WO	TCB1 WO	TCB2 WO
Other	-			

Note:

- SPI connections to the CCL work only in master SPI mode
- USART connections to the CCL work only in asynchronous/synchronous USART master mode.

26.3 Functional Description

26.3.1 Operation

26.3.1.1 Enable-Protected Configuration

The configuration of the LUTs and sequencers is enable-protected, meaning that they can only be configured when the corresponding even LUT is disabled (ENABLE=0 in the LUT n Control A register, CCL.LUTnCTRLA). This is a mechanism to suppress the undesired output from the CCL under (re-)configuration.

The following bits and registers are enable-protected:

- Sequencer Selection (SEQSEL) in the Sequencer Control n register (CCL.SEQCTRLn)
- LUT n Control x registers (CCL.LUTnCTRLx), except the ENABLE bit in CCL.LUTnCTRLA

The enable-protected bits in the CCL.LUTnCTRLx registers can be written at the same time as ENABLE in CCL.LUTnCTRLA is written to '1', but not at the same time as ENABLE is written to '0'.

The enable protection is denoted by the enable-protected property in the register description.

26.3.1.2 Enabling, Disabling, and Resetting

The CCL is enabled by writing a '1' to the ENABLE bit in the Control register (CCL.CTRLA). The CCL is disabled by writing a '0' to that ENABLE bit.

Each LUT is enabled by writing a '1' to the LUT Enable bit (ENABLE) in the LUT n Control A register (CCL.LUTnCTRLA). Each LUT is disabled by writing a '0' to the ENABLE bit in CCL.LUTnCTRLA.

26.3.1.3 Truth Table Logic

The truth table in each LUT unit can generate a combinational logic output as a function of up to three inputs (IN[2:0]). The unused inputs can be turned off (tied low). The truth table for the combinational logic expression is defined by the bits in the CCL.TRUTHn registers. Each combination of the input bits (IN[2:0]) corresponds to one bit in the TRUTHn register, as shown in the table below.

Figure 26-2. Truth Table Output Value Selection of a LUT

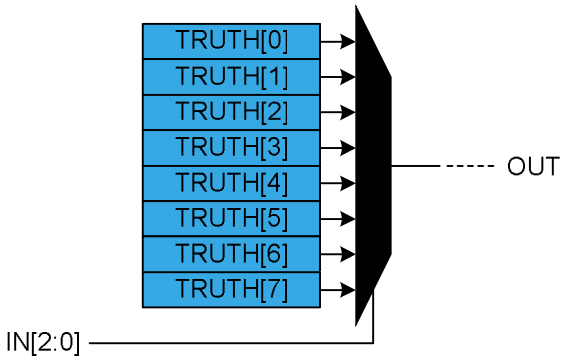

Table 26-3. Truth Table of a LUT

IN[2]	IN[1]	IN[0]	OUT
0	0	0	TRUTH[0]
0	0	1	TRUTH[1]
0	1	0	TRUTH[2]
0	1	1	TRUTH[3]
1	0	0	TRUTH[4]
1	0	1	TRUTH[5]
1	1	0	TRUTH[6]
1	1	1	TRUTH[7]

26.3.1.4 Truth Table Inputs Selection

Input Overview

The inputs can be individually:

- OFF
- Driven by peripherals
- Driven by internal events from the Event System
- Driven by I/O pin inputs
- Driven by other LUTs

The input for each LUT is configured by writing the Input Source Selection bits in the LUT Control registers:

- INSEL0 in CCL.LUTnCTRLB
- INSEL1 in CCL.LUTnCTRLB
- INSEL2 in CCL.LUTnCTRLC

Internal Feedback Inputs (FEEDBACK)

The output from a sequencer can be used as an input source for the two LUTs it is connected to.

Figure 26-3. Feedback Input Selection

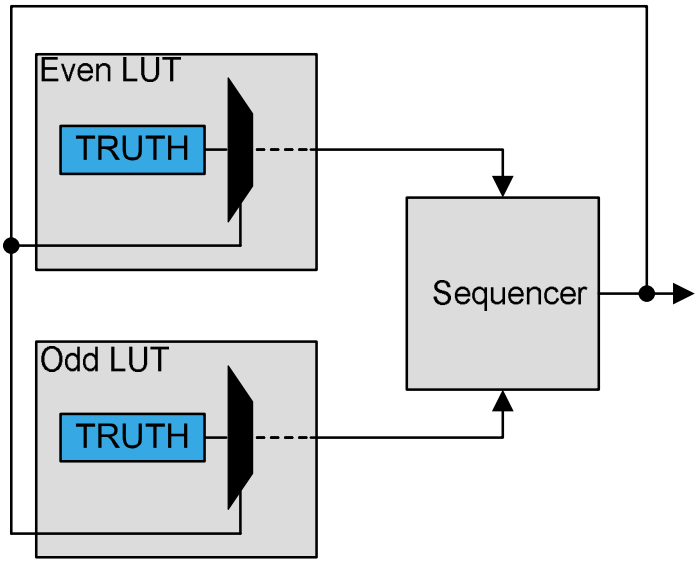

When selected (INSELy=FEEDBACK in LUTnCTRLx), the sequencer (SEQ) output is used as input for the corresponding LUTs.

Linked LUT (LINK)

When selecting the LINK input option, the next LUT's direct output is used as LUT input. In general, LUT[n+1] is linked to the input of LUT[n]. LUT0 is linked to the input of the last LUT.

Example 26-1. Linking all LUTs on a Device with Four LUTs

- LUT1 is the input for LUT0
- LUT2 is the input for LUT1
- LUT3 is the input for LUT2
- LUT0 is the input for LUT3 (wrap-around)

Figure 26-4. Linked LUT Input Selection

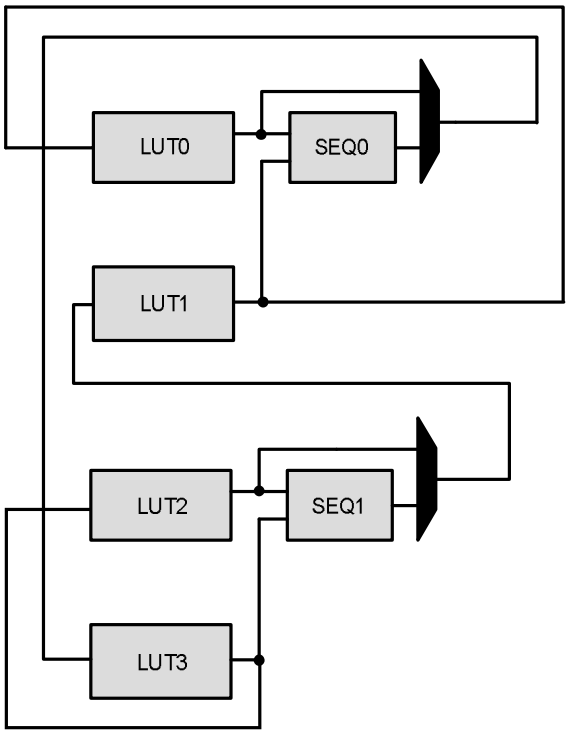

Event Input Selection (EVENTx)
Events from the Event System can be used as inputs to the LUTs by writing to the INSELn bit groups in the LUT n Control A and B registers.

I/O Pin Inputs (IO)
When selecting the IO option, the LUT input will be connected to its corresponding I/O pin. Refer to the I/O Multiplexing section in the data sheet for more details about where the LUTnINy pins are located.

Peripherals
The different peripherals on the three input lines of each LUT are selected by writing to the Input Select (INSEL) bits in the LUT Control registers (LUTnCTRLB and LUTnCTRLC).

26.3.1.5 Filter

By default, the LUT output is a combinational function of the LUT inputs. This may cause some short glitches when the inputs change the value. These glitches can be removed by clocking through filters if demanded by application needs.

The Filter Selection bits (FILTSEL) in the LUT n Control A registers (CCL.LUTnCTRLA) define the digital filter options.

When FILTSEL=SYNCH, the output is synchronized with CLK_LUTn. The output will be delayed by two positive CLK_LUTn edges.

When FILTSEL=FILTER, only the input that is persistent for more than two positive CLK_LUTn edges will pass through the gated flip-flop to the output. The output will be delayed by four positive CLK_LUTn edges.

One clock cycle later, after the corresponding LUT is disabled, all internal filter logic is cleared.

Figure 26-5. Filter

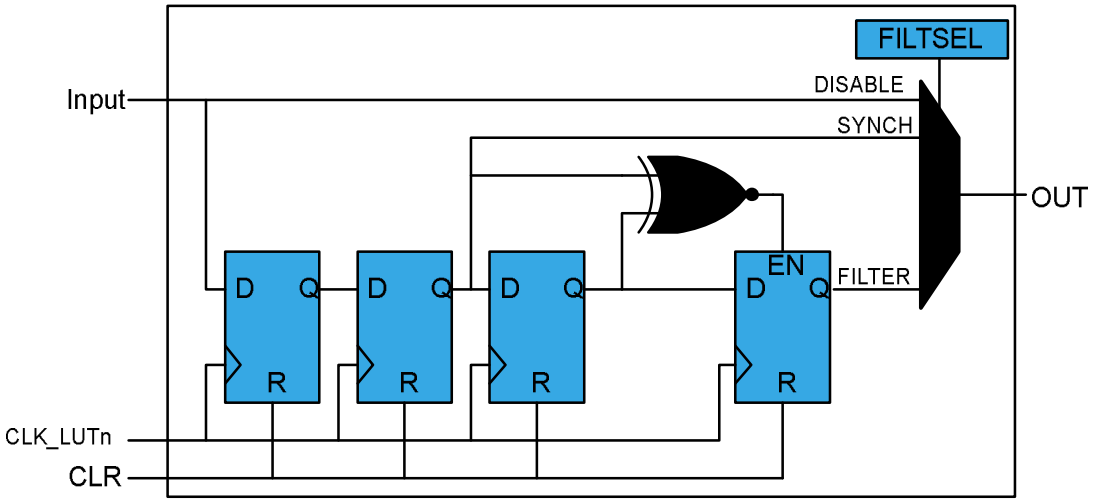

26.3.1.6 Edge Detector

The edge detector can be used to generate a pulse when detecting a rising edge on its input. To detect a falling edge, the TRUTH table can be programmed to provide inverted output.

The edge detector is enabled by writing '1' to the Edge Detection bit (EDGEDET) in the LUT n Control A register (CCL.LUTnCTRLA). In order to avoid unpredictable behavior, a valid filter option must be enabled.

The edge detection is disabled by writing a '0' to EDGEDET in CCL.LUTnCTRLA. After disabling a LUT, the corresponding internal edge detector logic is cleared one clock cycle later.

Figure 26-6. Edge Detector

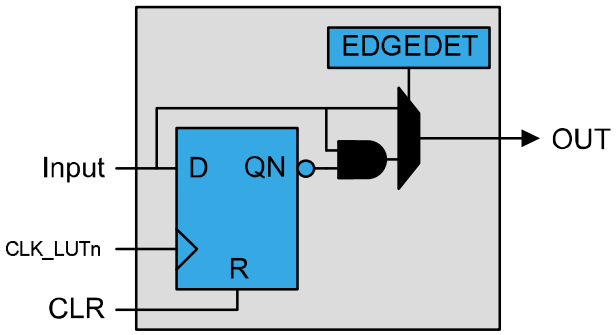

26.3.1.7 Sequencer Logic

Each LUT pair can be connected to a sequencer. The sequencer can function as either D flip-flop, JK flip-flop, gated D latch, or RS latch. The function is selected by writing the Sequencer Selection (SEQSEL) bit group in the Sequencer Control register (CCL.SEQCTRLn).

The sequencer receives its input from either the LUT, filter or edge detector, depending on the configuration.

A sequencer is clocked by the same clock as the corresponding even LUT. The clock source is selected by the Clock Source (CLKSRC) bit group in the LUT n Control A register (CCL.LUTnCTRLA).

The flip-flop output (OUT) is refreshed on the rising edge of the clock. When the even LUT is disabled, the latch is cleared asynchronously. The flip-flop Reset signal (R) is kept enabled for one clock cycle.

Gated D Flip-Flop (DFF)

The D input is driven by the even LUT output, and the G input is driven by the odd LUT output.

Figure 26-7. D Flip-Flop

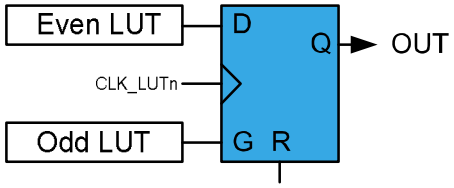

Table 26-4. DFF Characteristics

R	G	D	OUT
1	X	X	Clear
0	1	1	Set
0	1	0	Clear
0	0	X	Hold state (no change)

JK Flip-Flop (JK)

The J input is driven by the even LUT output, and the K input is driven by the odd LUT output.

Figure 26-8. JK Flip-Flop

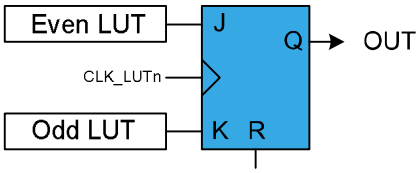

Table 26-5. JK Characteristics

R	J	K	OUT
1	X	X	Clear
0	0	0	Hold state (no change)
0	0	1	Clear
0	1	0	Set
0	1	1	Toggle

Gated D Latch (DLATCH)

The D input is driven by the even LUT output, and the G input is driven by the odd LUT output.

Figure 26-9. D Latch

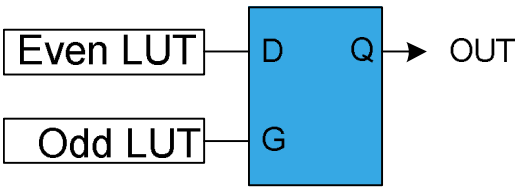

Table 26-6. D Latch Characteristics

G	D	OUT
0	X	Hold state (no change)
1	0	Clear

.....continued		
G	D	OUT
1	1	Set

RS Latch (RS)
The S input is driven by the even LUT output, and the R input is driven by the odd LUT output.

Figure 26-10. RS Latch

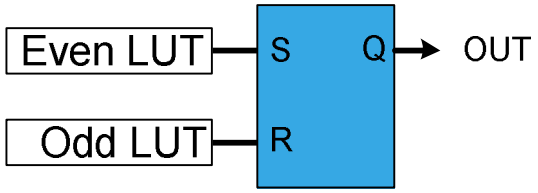

Table 26-7. RS Latch Characteristics

S	R	OUT
0	0	Hold state (no change)
0	1	Clear
1	0	Set
1	1	Forbidden state

26.3.1.8 Clock Source Settings

The filter, edge detector, and sequencer are, by default, clocked by the system clock (CLK_PER). It is also possible to use other clock inputs (CLK_LUTn) to clock these blocks. This is configured by writing the Clock Source (CLKSRC) bits in the LUT Control A register.

Figure 26-11. Clock Source Settings

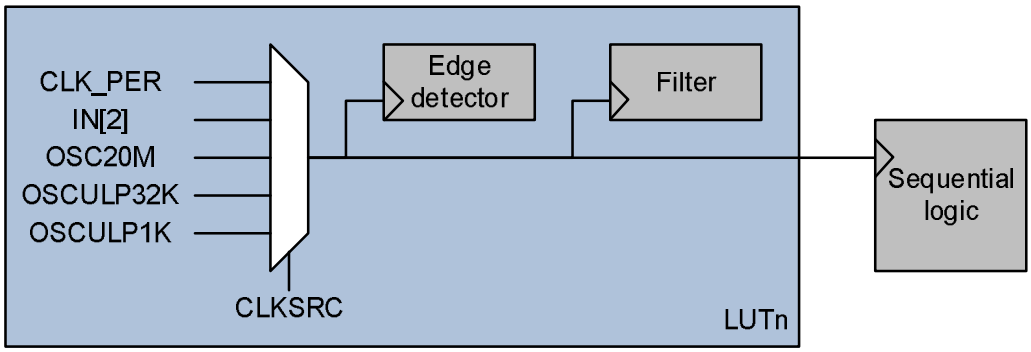

When the Clock Source (CLKSRC) bit is written to 0x1, IN[2] is used to clock the corresponding filter and edge detector (CLK_LUTn). The sequencer is clocked by the CLK_LUTn of the even LUT in the pair. When CLKSRC is written to 0x1, IN[2] is treated as OFF (low) in the TRUTH table.

The CCL peripheral must be disabled while changing the clock source to avoid undefined outputs from the peripheral.

26.3.2 Interrupts

Table 26-8. Available Interrupt Vectors and Sources

Name	Vector Description	Conditions
CCL	CCL interrupt	INTn in INTFLAG is raised as configured by the INTMODEn bits in the CCL.INTCTRLn register

When an interrupt condition occurs, the corresponding interrupt flag is set in the Interrupt Flags register of the peripheral (*peripheral*.INTFLAGS).

An interrupt source is enabled or disabled by writing to the corresponding enable bit in the peripheral's Interrupt Control (*peripheral*.INTCTRL) register.

An interrupt request is generated when the corresponding interrupt source is enabled, and the interrupt flag is set. The interrupt request remains active until the interrupt flag is cleared. See the peripheral's INTFLAGS register for details on how to clear interrupt flags.

When several interrupt request conditions are supported by an interrupt vector, the interrupt requests are ORed together into one combined interrupt request to the interrupt controller. The user must read the Interrupt flags from the Master Status (TWIn.MSTATUS) register or Slave Status (TWIn.SSTATUS) register to determine which of the interrupt conditions are present.

26.3.3 Events

The CCL can generate the events shown in the table below.

Table 26-9. Event Generators in the CCL

Generator Name		Description	Event Type	Generating Clock Domain	Length of Event
Peripheral	Event				
CCL	LUTn	LUT output level	Level	Asynchronous	Depends on the CCL configuration

The CCL has the event users below for detecting and acting upon input events.

Table 26-10. Event Users in the CCL

User Name		Description	Input Detection	Async/Sync
Peripheral	Input			
CCL	LUTnx	LUTn input x or clock signal	No detection	Async

The event signals are passed directly to the LUTs without synchronization or input detection logic.

Two event users are available for each LUT. They can be selected as LUTn inputs by writing to the INSELn bit groups in the LUT n Control B and Control C registers (CCL.LUTnCTRLB or LUTnCTRLC).

Refer to the Event System (EVSYS) section for more details regarding the event types and the EVSYS configuration.

26.3.4 Sleep Mode Operation

Writing the Run In Standby bit (RUNSTDBY) in the Control A register (CCL.CTRLA) to '1' will allow the system clock to be enabled in Standby Sleep mode.

If RUNSTDBY is '0' the system clock will be disabled in Standby Sleep mode. If the filter, edge detector, and/or sequencer are enabled, the LUT output will be forced to '0' in Standby Sleep mode. In Idle Sleep mode, the TRUTH table decoder will continue the operation and the LUT output will be refreshed accordingly, regardless of the RUNSTDBY bit.

If the Clock Source bit (CLKSRC) in the LUT n Control A register (CCL.LUTnCTRLA) is written to '1', the LUT Input 2 (IN[2]) will always clock the filter, edge detector, and sequencer. The availability of the IN[2] clock in sleep modes will depend on the sleep settings of the peripheral used.

26.4 Register Summary - CCL

Offset	Name	Bit Pos.								
0x00	CTRLA	7:0		RUNSTDBY						ENABLE
0x01	SEQCTRL0	7:0					SEQSEL0[3:0]			
0x02	SEQCTRL1	7:0					SEQSEL1[3:0]			
0x03 ... 0x04	Reserved									
0x05	INTCTRL0	7:0	INTMODE3[1:0]		INTMODE2[1:0]		INTMODE1[1:0]		INTMODE0[1:0]	
0x06	Reserved									
0x07	INTFLAGS	7:0					INT3	INT2	INT1	INT0
0x08	LUT0CTRLA	7:0	EDGEDET	OUTEN	FILTSEL[1:0]		CLKSRC[2:0]			ENABLE
0x09	LUT0CTRLB	7:0	INSEL1[3:0]				INSEL0[3:0]			
0x0A	LUT0CTRLC	7:0					INSEL2[3:0]			
0x0B	TRUTH0	7:0	TRUTH[7:0]							
0x0C	LUT1CTRLA	7:0	EDGEDET	OUTEN	FILTSEL[1:0]		CLKSRC[2:0]			ENABLE
0x0D	LUT1CTRLB	7:0	INSEL1[3:0]				INSEL0[3:0]			
0x0E	LUT1CTRLC	7:0					INSEL2[3:0]			
0x0F	TRUTH1	7:0	TRUTH[7:0]							
0x10	LUT2CTRLA	7:0	EDGEDET	OUTEN	FILTSEL[1:0]		CLKSRC[2:0]			ENABLE
0x11	LUT2CTRLB	7:0	INSEL1[3:0]				INSEL0[3:0]			
0x12	LUT2CTRLC	7:0					INSEL2[3:0]			
0x13	TRUTH2	7:0	TRUTH[7:0]							
0x14	LUT3CTRLA	7:0	EDGEDET	OUTEN	FILTSEL[1:0]		CLKSRC[2:0]			ENABLE
0x15	LUT3CTRLB	7:0	INSEL1[3:0]				INSEL0[3:0]			
0x16	LUT3CTRLC	7:0					INSEL2[3:0]			
0x17	TRUTH3	7:0	TRUTH[7:0]							

26.5 Register Description

26.5.1 Control A

Name: CTRLA
Offset: 0x00
Reset: 0x00
Property: -

Bit	7	6	5	4	3	2	1	0
		RUNSTDBY						ENABLE
Access		R/W						R/W
Reset		0						0

Bit 6 – RUNSTDBY Run in Standby
This bit indicates if the peripheral clock (CLK_PER) is kept running in Standby Sleep mode. The setting is ignored for configurations where the CLK_PER is not required.

Value	Description
0	The system clock is not required in Standby Sleep mode
1	The system clock is required in Standby Sleep mode

Bit 0 – ENABLE Enable

Value	Description
0	The peripheral is disabled
1	The peripheral is enabled

26.5.2 Sequencer Control 0

Name: SEQCTRL0
Offset: 0x01
Reset: 0x00
Property: Enable-Protected

Bit	7	6	5	4	3	2	1	0
					SEQSEL0[3:0]			
Access					R/W	R/W	R/W	R/W
Reset					0	0	0	0

Bits 3:0 – SEQSEL0[3:0] Sequencer Selection
This bit group selects the sequencer configuration for LUT0 and LUT1.

Value	Name	Description
0x0	DISABLE	The sequencer is disabled
0x1	DFF	D flip-flop
0x2	JK	JK flip-flop
0x3	LATCH	D latch
0x4	RS	RS latch
Other	-	Reserved

26.5.3 Sequencer Control 1

Name: SEQCTRL1
Offset: 0x02
Reset: 0x00
Property: Enable-Protected

Bit	7	6	5	4	3	2	1	0
					SEQSEL1[3:0]			
Access					R/W	R/W	R/W	R/W
Reset					0	0	0	0

Bits 3:0 – SEQSEL1[3:0] Sequencer Selection
This bit group selects the sequencer configuration for LUT2 and LUT3.

Value	Name	Description
0x0	DISABLE	The sequencer is disabled
0x1	DFF	D flip-flop
0x2	JK	JK flip-flop
0x3	LATCH	D latch
0x4	RS	RS latch
Other	-	Reserved

26.5.4 Interrupt Control 0

Name: INTCTRL0
Offset: 0x05
Reset: 0x00
Property: -

Bit	7	6	5	4	3	2	1	0
	INTMODE3[1:0]		INTMODE2[1:0]		INTMODE1[1:0]		INTMODE0[1:0]	
Access	R/W	R/W	R/W	R/W	R/W	R/W	R/W	R/W
Reset	0	0	0	0	0	0	0	0

Bits 0:1, 2:3, 4:5, 6:7 – INTMODE
The bits in INTMODEn select the interrupt sense configuration for LUTn-OUT.

Value	Name	Description
0x0	INTDISABLE	Interrupt disabled
0x1	RISING	Sense rising edge
0x2	FALLING	Sense falling edge
0x3	BOTH	Sense both edges

26.5.5 Interrupt Flag

Name: INTFLAGS
Offset: 0x07
Reset: 0x00
Property: -

Bit	7	6	5	4	3	2	1	0
					INT3	INT2	INT1	INT0
Access					R/W	R/W	R/W	R/W
Reset					0	0	0	0

Bits 0, 1, 2, 3 – INT Interrupt Flag
The INTn flag is set when the LUTn output change matches the Interrupt Sense mode as defined in CCL.INTCTRLn. Writing a '1' to this flag's bit location will clear the flag.

26.5.6 LUT n Control A

Name: LUTnCTRLA
Offset: 0x08 + n*0x04 [n=0..3]
Reset: 0x00
Property: Enable-Protected

Bit	7	6	5	4	3	2	1	0
	EDGEDET	OUTEN	FILTSEL[1:0]		CLKSRC[2:0]			ENABLE
Access	R/W	R/W	R/W	R/W	R/W	R/W	R/W	R/W
Reset	0	0	0	0	0	0	0	0

Bit 7 – EDGEDET Edge Detection

Value	Description
0	Edge detector is disabled
1	Edge detector is enabled

Bit 6 – OUTEN Output Enable
This bit enables the LUT output to the LUTn OUT pin. When written to '1', the pin configuration of the PORT I/O-Controller is overridden.

Value	Description
0	Output to pin disabled
1	Output to pin enabled

Bits 5:4 – FILTSEL[1:0] Filter Selection
These bits select the LUT output filter options.

Value	Name	Description
0x0	DISABLE	Filter disabled
0x1	SYNCH	Synchronizer enabled
0x2	FILTER	Filter enabled
0x3	-	Reserved

Bits 3:1 – CLKSRC[2:0] Clock Source Selection
This bit selects between various clock sources to be used as the clock (CLK_LUTn) for a LUT.
The CLK_LUTn of the even LUT is used for clocking the sequencer of a LUT pair.

Value	Name	Description
0x0	CLKPER	CLK_PER is clocking the LUT
0x1	IN2	LUT input 2 is clocking the LUT
0x2	-	Reserved
0x3	-	Reserved
0x4	OSC20M	16/20 MHz oscillator before prescaler is clocking the LUT
0x5	OSCULP32K	32.768 kHz internal oscillator is clocking the LUT
0x6	OSCULP1K	1.024 kHz (OSCKULP32K after DIV32) is clocking the LUT
0x7	-	Reserved

Bit 0 – ENABLE LUT Enable

Value	Description
0	The LUT is disabled
1	The LUT is enabled

26.5.7 LUT n Control B

Name: LUTnCTRLB
Offset: 0x09 + n*0x04 [n=0..3]
Reset: 0x00
Property: Enable-Protected

Note:
1. SPI connections to the CCL work in master SPI mode only.
2. USART connections to the CCL work only when the USART is in one of the following modes:
   – Asynchronous USART
   – Synchronous USART master

Bit	7	6	5	4	3	2	1	0
	INSEL1[3:0]				INSEL0[3:0]			
Access	R/W	R/W	R/W	R/W	R/W	R/W	R/W	R/W
Reset	0	0	0	0	0	0	0	0

Bits 7:4 – INSEL1[3:0] LUT n Input 1 Source Selection
These bits select the source for input 1 of LUT n.

Value	Name	Description
0x0	MASK	None (masked)
0x1	FEEDBACK	Feedback input
0x2	LINK	Output from LUTn+1
0x3	EVENTA	Event input source A
0x4	EVENTB	Event input source B
0x5	IO	I/O-pin LUTn-IN1
0x6	AC0	AC0 out
0x7	-	Reserved
0x8	USART1	USART1 TXD
0x9	SPI0	SPI0 MOSI
0xA	TCA0	TCA0 WO1
0xB	-	Reserved
0xC	TCB1	TCB1 WO
Other	-	Reserved

Bits 3:0 – INSEL0[3:0] LUT n Input 0 Source Selection
These bits select the source for input 0 of LUT n.

Value	Name	Description
0x0	MASK	None (masked)
0x1	FEEDBACK	Feedback input
0x2	LINK	Output from LUTn+1
0x3	EVENTA	Event input source A
0x4	EVENTB	Event input source B

.....continued

Value	Name	Description
0x5	IO	I/O-pin LUTn-IN0
0x6	AC0	AC0 out
0x7	-	Reserved
0x8	USART0	USART0 TXD
0x9	SPI0	SPI0 MOSI
0xA	TCA0	TCA0 WO0
0xB	-	Reserved
0xC	TCB0	TCB0 WO
Other	-	Reserved

26.5.8 LUT n Control C

Name: LUTnCTRLC
Offset: 0x0A + n*0x04 [n=0..3]
Reset: 0x00
Property: Enable-Protected

Bit	7	6	5	4	3	2	1	0
					INSEL2[3:0]			
Access					R/W	R/W	R/W	R/W
Reset					0	0	0	0

Bits 3:0 – INSEL2[3:0] LUT n Input 2 Source Selection
These bits select the source for input 2 of LUT n.

Value	Name	Description
0x0	MASK	None (masked)
0x1	FEEDBACK	Feedback input
0x2	LINK	Output from LUTn+1
0x3	EVENTA	Event input source A
0x4	EVENTB	Event input source B
0x5	IO	I/O-pin LUTn-IN2
0x6	AC0	AC0 out
0x7	-	Reserved
0x8	USART2	USART2 TXD
0x9	SPI0	SPI0 SCK
0xA	TCA0	TCA0 WO2
0xB	-	Reserved
0xC	TCB2	TCB2 WO
Other	-	Reserved

26.5.9 TRUTHn

Name: TRUTHn
Offset: 0x0B + n*0x04 [n=0..3]
Reset: 0x00
Property: Enable-Protected

Bit	7	6	5	4	3	2	1	0
	TRUTH[7:0]							
Access	R/W	R/W	R/W	R/W	R/W	R/W	R/W	R/W
Reset	0	0	0	0	0	0	0	0

Bits 7:0 – TRUTH[7:0] Truth Table
These bits define the value of truth logic as a function of inputs IN[2:0].

27. AC - Analog Comparator

27.1 Features

- Selectable response time
- Selectable hysteresis
- Analog comparator output available on pin
- Comparator output inversion available
- Flexible input selection:
  - Four Positive pins
  - Three Negative pins
  - Internal reference voltage generator (DACREF)
- Interrupt generation on:
  - Rising edge
  - Falling edge
  - Both edges
- Event generation:
  - Comparator output

27.2 Overview

The Analog Comparator (AC) compares the voltage levels on two inputs and gives a digital output based on this comparison. The AC can be configured to generate interrupt requests and/or Events upon several different combinations of input change.

The dynamic behavior of the AC can be adjusted by a hysteresis feature. The hysteresis can be customized to optimize the operation for each application.

The input selection includes analog port pins and internally generated inputs. The analog comparator output state can also be output on a pin for use by external devices.

An AC has one positive input and one negative input. The digital output from the comparator is '1' when the difference between the positive and the negative input voltage is positive, and '0' otherwise.

27.2.1 Block Diagram

Figure 27-1. Analog Comparator

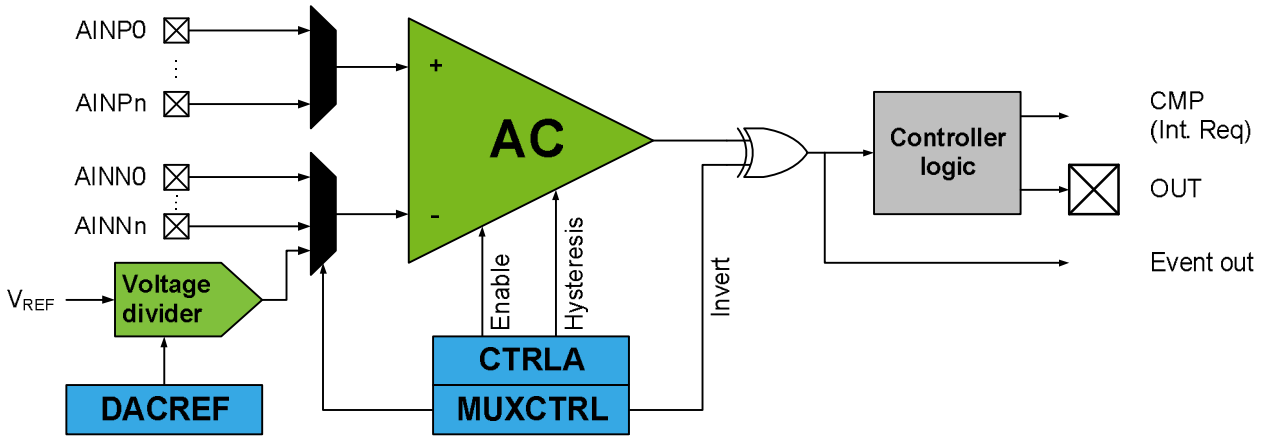

27.2.2 Signal Description

Signal	Description	Type
AINNn	Negative Input n	Analog
AINPn	Positive Input n	Analog
OUT	Comparator Output for AC	Digital

27.3 Functional Description

27.3.1 Initialization

For basic operation, follow these steps:

- Configure the desired input pins in the port peripheral
- Select the positive and negative input sources by writing the Positive and Negative Input MUX Selection bit fields (MUXPOS and MUXNEG) in the MUX Control A register (AC.MUXCTRLA)
- Optional: Enable the output to pin by writing a '1' to the Output Pad Enable bit (OUTEN) in the Control A register (AC.CTRLA)
- Enable the AC by writing a '1' to the ENABLE bit in AC.CTRLA

During the start-up time after enabling the AC, the output of the AC may be invalid.

The start-up time of the AC by itself is at most 2.5 µs. If an internal reference is used, the reference start-up time is normally longer than the AC start-up time.

To avoid the pin being tri-stated when the AC is disabled, the OUT pin must be configured as output in PORTx.DIR

27.3.2 Operation

27.3.2.1 Input Hysteresis

Applying an input hysteresis helps to prevent constant toggling of the output when the noise-afflicted input signals are close to each other.

The input hysteresis can either be disabled or have one of three levels. The hysteresis is configured by writing to the Hysteresis Mode Select bit field (HYSMODE) in the Control A register (ACn.CTRLA).

27.3.2.2 Input Sources

An AC has one positive and one negative input. The inputs can be pins and internal sources, such as a voltage reference.

Each input is selected by writing to the Positive and Negative Input MUX Selection bit field (MUXPOS and MUXNEG) in the MUX Control A register (ACn.MUXTRLA).

27.3.2.2.1 Pin Inputs

The following Analog input pins on the port can be selected as input to the analog comparator:

- AINN0
- AINN1
- AINN2
- AINP0
- AINP1
- AINP2
- AINP3

27.3.2.2.2 Internal Inputs

The DAC has the following internal inputs:

- Internal reference voltage generator (DACREF)

27.3.2.3 Power Modes

For power sensitive applications, the AC provides multiple power modes with balance power consumption and propagation delay. A mode is selected by writing to the Mode bits (MODE) in the Control A register (ACn.CTRLA).

27.3.2.4 Signal Compare and Interrupt

After successful initialization of the AC, and after configuring the desired properties, the result of the comparison is continuously updated and available for application software, the Event system, or on a pin.

The AC can generate a comparator Interrupt, COMP. The AC can request this interrupt on either rising, falling, or both edges of the toggling comparator output. This is configured by writing to the Interrupt Modes bit field in the Control A register (INTMODE bits in ACn.CTRLA).

The Interrupt is enabled by writing a ‘1’ to the Analog Comparator Interrupt Enable bit in the Interrupt Control register (COMP bit in ACn.INTCTRL).

27.3.3 Events

The AC will generate the following event automatically when the AC is enabled:

- The digital output from the AC (OUT in the block diagram) is available as an Event System source. The events from the AC are asynchronous to any clocks in the device.

The AC has no event inputs.

27.3.4 Interrupts

Table 27-1. Available Interrupt Vectors and Sources

Name	Vector Description	Conditions
COMP	Analog comparator interrupt	AC output is toggling as configured by INTMODE in ACn.CTRLA

When an interrupt condition occurs, the corresponding Interrupt Flag is set in the Status register (ACn.STATUS).

An interrupt source is enabled or disabled by writing to the corresponding bit in the peripheral's Interrupt Control register (ACn.INTCTRL).

An interrupt request is generated when the corresponding interrupt source is enabled and the Interrupt Flag is set. The interrupt request remains active until the Interrupt Flag is cleared. See the ACn.STATUS register description for details on how to clear Interrupt Flags.

27.3.5 Sleep Mode Operation

In Idle sleep mode, the AC will continue to operate as normal.

In Standby sleep mode, the AC is disabled by default. If the Run in Standby Sleep Mode bit (RUNSTDBY) in the Control A register (ACn.CTRLA) is written to '1', the AC will continue to operate as normal with Event, Interrupt, and AC output on pad even if the CLK_PER is not running in Standby sleep mode.

In Power Down sleep mode, the AC and the output to the pad are disabled.

27.4 Register Summary - AC

Offset	Name	Bit Pos.								
0x00	CTRLA	7:0	RUNSTDBY	OUTEN	INTMODE[1:0]		LPMODE	HYSMODE[1:0]		ENABLE
0x01	Reserved									
0x02	MUXCTRL	7:0	INVERT			MUXPOS[1:0]			MUXNEG[1:0]	
0x03	Reserved									
0x04	DACREF	7:0	DACREF[7:0]							
0x05	Reserved									
0x06	INTCTRL	7:0								CMP
0x07	STATUS	7:0				STATE				CMP

27.5 Register Description

27.5.1 Control A

Name: CTRLA
Offset: 0x00
Reset: 0x00
Property: -

Bit	7	6	5	4	3	2	1	0
	RUNSTDBY	OUTEN	INTMODE[1:0]		LPMODE	HYSMODE[1:0]		ENABLE
Access	R/W	R/W	R/W	R/W	R/W	R/W	R/W	R/W
Reset	0	0	0	0	0	0	0	0

Bit 7 – RUNSTDBY Run in Standby Mode
Writing a '1' to this bit allows the AC to continue operation in Standby sleep mode. Since the clock is stopped, interrupts and status flags are not updated.

Value	Description
0	In Standby sleep mode, the peripheral is halted
1	In Standby sleep mode, the peripheral continues operation

Bit 6 – OUTEN Analog Comparator Output Pad Enable
Writing this bit to '1' makes the OUT signal available on the pin.

Bits 5:4 – INTMODE[1:0] Interrupt Modes
Writing to these bits selects what edges of the AC output triggers an interrupt request.

Value	Name	Description
0x0	BOTHEDGE	Both negative and positive edge
0x1	-	Reserved
0x2	NEGEDGE	Negative edge
0x3	POSEDGE	Positive edge

Bit 3 – LPMODE Low-Power Mode
Writing a '1' to this bit reduces the current through the comparator. This reduces the power consumption but increases the reaction time of the AC.

Value	Description
0	Low-Power mode disabled
1	Low-Power mode enabled

Bits 2:1 – HYSMODE[1:0] Hysteresis Mode Select
Writing these bits select the hysteresis mode for the AC input.

Value	Name	Description
0x0	NONE	No hysteresis
0x1	SMALL	Small hysteresis
0x2	MEDIUM	Medium hysteresis
0x3	LARGE	Large hysteresis

Bit 0 – ENABLE Enable AC
Writing this bit to '1' enables the AC.

27.5.2 Mux Control

Name: MUXCTRL
Offset: 0x02
Reset: 0x00
Property: -

Bit	7	6	5	4	3	2	1	0
	INVERT			MUXPOS[1:0]			MUXNEG[1:0]	
Access	R/W			R/W	R/W		R/W	R/W
Reset	0			0	0		0	0

Bit 7 – INVERT Invert AC Output
Writing a '1' to this bit enables inversion of the output of the AC. This effectively inverts the input to all the peripherals connected to the signal, and also affects the internal status signals.

Bits 4:3 – MUXPOS[1:0] Positive Input MUX Selection
Writing to this bit field selects the input signal to the positive input of the AC.

Value	Name	Description
0x0	AINP0	Positive pin 0
0x1	AINP1	Positive pin 1
0x2	AINP2	Positive pin 2
0x3	AINP3	Positive pin 3

Bits 1:0 – MUXNEG[1:0] Negative Input MUX Selection
Writing to this bit field selects the input signal to the negative input of the AC.

Value	Name	Description
0x0	AINN0	Negative pin 0
0x1	AINN1	Negative pin 1
0x2	AINN2	Negative pin 2
0x3	DACREF	Internal DAC reference

27.5.3 DAC Voltage Reference

Name: DACREF
Offset: 0x04
Reset: 0xFF
Property: R/W

Bit	7	6	5	4	3	2	1	0
	DACREF[7:0]							
Access	R/W	R/W	R/W	R/W	R/W	R/W	R/W	R/W
Reset	1	1	1	1	1	1	1	1

Bits 7:0 – DACREF[7:0] DACREF Data Value
These bits define the output voltage from the internal voltage divider. The DAC reference is divided from on the selections in the VREF module and the output voltage is defined by:

$$V_{\mathrm{DACREF}} = \frac{\mathrm{DACREF}}{256} \times V_{\mathrm{REF}}$$

27.5.4 Interrupt Control

Name: INTCTRL
Offset: 0x06
Reset: 0x00
Property: -

Bit	7	6	5	4	3	2	1	0
								CMP
Access								R/W
Reset								0

Bit 0 – CMP Analog Comparator Interrupt Enable
Writing this bit to '1' enables Analog Comparator Interrupt.

27.5.5 Status

Name: STATUS
Offset: 0x07
Reset: 0x00
Property: -

Bit	7	6	5	4	3	2	1	0
				STATE				CMP
Access				R				R/W
Reset				0				0

Bit 4 – STATE Analog Comparator State
This shows the current status of the OUT signal from the AC. This will have a synchronizer delay to get updated in the I/O register (three cycles).

Bit 0 – CMP Analog Comparator Interrupt Flag
This is the interrupt flag for AC. Writing a ‘1’ to this bit will clear the Interrupt flag.

28. ADC - Analog-to-Digital Converter

28.1 Features

- 10-Bit Resolution
- 0V to V_{DD} Input Voltage Range
- Multiple Internal ADC Reference Voltages
- External Reference Input
- Free-running and Single Conversion mode
- Interrupt Available on Conversion Complete
- Optional Interrupt on Conversion Results
- Temperature Sensor Input Channel
- Optional Event triggered conversion
- Window Comparator Function for accurate monitoring or defined Thresholds
- Accumulation up to 64 Samples per Conversion

28.2 Overview

The Analog-to-Digital Converter (ADC) peripheral produces 10-bit results. The ADC input can either be internal (e.g. a voltage reference) or external through the analog input pins. The ADC is connected to an analog multiplexer, which allows selection of multiple single-ended voltage inputs. The single-ended voltage inputs refer to 0V (GND).

The ADC supports sampling in bursts where a configurable number of conversion results are accumulated into a single ADC result (Sample Accumulation). Further, a sample delay can be configured to tune the ADC sampling frequency associated with a single burst. This is to tune the sampling frequency away from any harmonic noise aliased with the ADC sampling frequency (within the burst) from the sampled signal. An automatic sampling delay variation feature can be used to randomize this delay to slightly change the time between samples.

The ADC input signal is fed through a sample-and-hold circuit that ensures that the input voltage to the ADC is held at a constant level during sampling.

Selectable voltage references from the internal Voltage Reference (VREF) peripheral, V_{DD} supply voltage, or external VREF pin (VREFA).

A window compare feature is available for monitoring the input signal and can be configured to only trigger an interrupt on user-defined thresholds for under, over, inside, or outside a window, with minimum software intervention required.

28.2.1 Block Diagram

Figure 28-1. Block Diagram

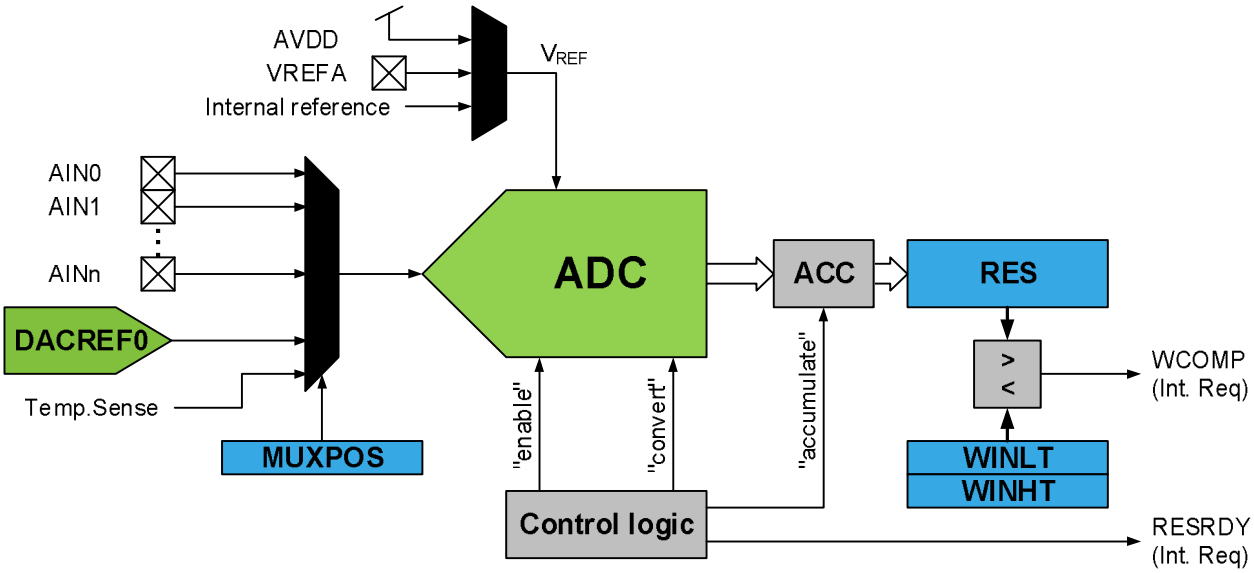

The analog input channel is selected by writing to the MUXPOS bits in the MUXPOS register (ADCn.MUXPOS). Any of the ADC input pins, GND, internal Voltage Reference (VREF), or temperature sensor, can be selected as single-ended input to the ADC. The ADC is enabled by writing a '1' to the ADC ENABLE bit in the Control A register (ADCn.CTRLA). Voltage reference and input channel selections will not go into effect before the ADC is enabled. The ADC does not consume power when the ENABLE bit in ADCn.CTRLA is '0'.

The ADC generates a 10-bit result that can be read from the Result Register (ADCn.RES). The result is presented right adjusted.

28.2.2 Signal Description

Pin Name	Type	Description
AIN[n:0]	Analog input	Analog input pin
VREFA	Analog input	External voltage reference pin

28.2.2.1 Definitions

An ideal n-bit single-ended ADC converts a voltage linearly between GND and VREF in 2^n steps (LSbs). The lowest code is read as '0', and the highest code is read as 2^{n-1}. Several parameters describe the deviation from the ideal behavior:

Offset Error The deviation of the first transition (0x000 to 0x001) compared to the ideal transition (at 0.5 LSb). Ideal value: 0 LSb.

Figure 28-2. Offset Error

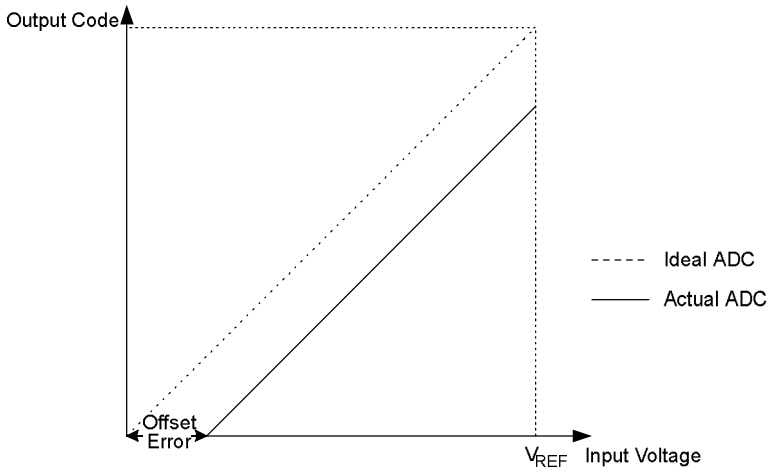

Gain Error

After adjusting for offset, the gain error is found as the deviation of the last transition (0x3FE to 0x3FF) compared to the ideal transition (at 1.5 LSb below maximum). Ideal value: 0 LSb.

Figure 28-3. Gain Error

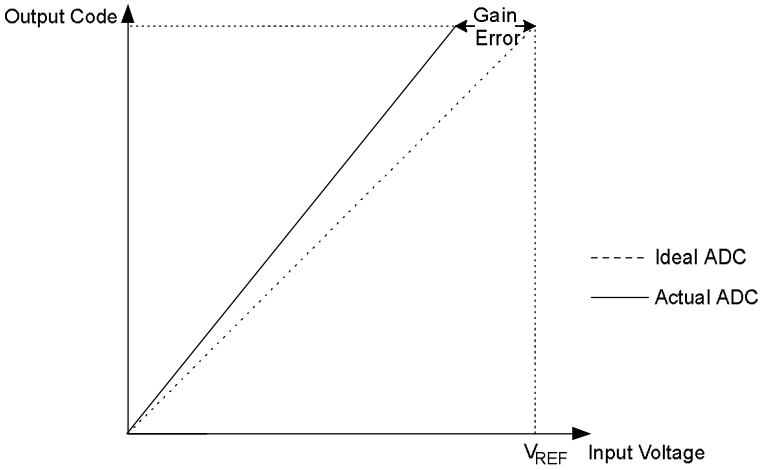

Integral Non-Linearity (INL)

After adjusting for offset and gain error, the INL is the maximum deviation of an actual transition compared to an ideal transition for any code. Ideal value: 0 LSb.

Figure 28-4. Integral Non-Linearity

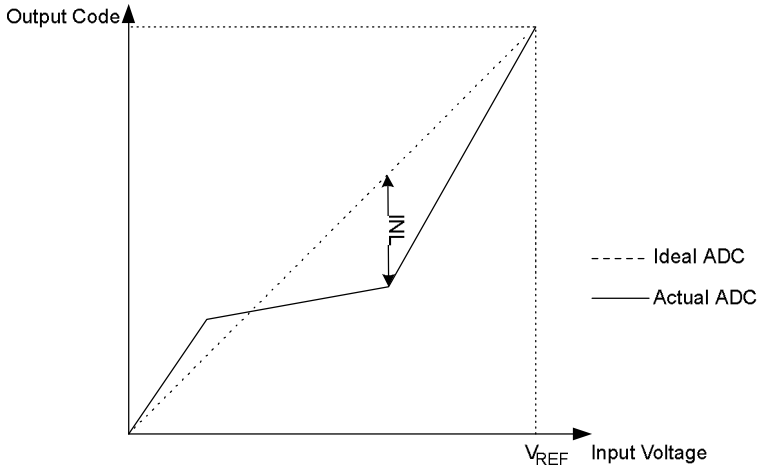

Differential Non-Linearity (DNL) The maximum deviation of the actual code width (the interval between two adjacent transitions) from the ideal code width (1 LSb). Ideal value: 0 LSb.

Figure 28-5. Differential Non-Linearity

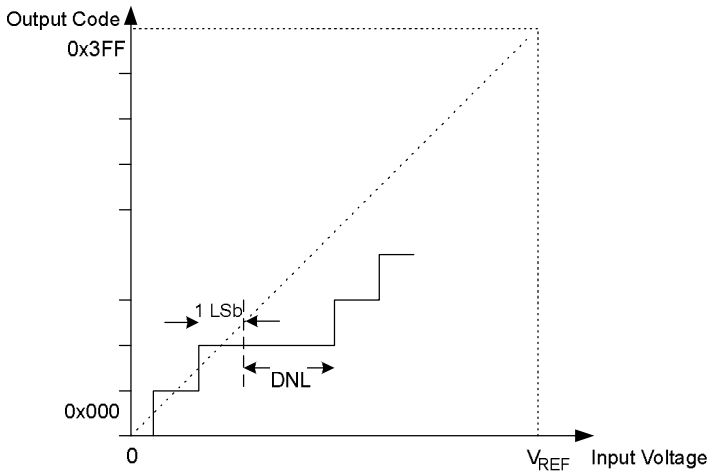

Quantization Error Due to the quantization of the input voltage into a finite number of codes, a range of input voltages (1 LSb wide) will code to the same value. Always ±0.5 LSb.

Absolute Accuracy The maximum deviation of an actual (unadjusted) transition compared to an ideal transition for any code. This is the compound effect of all aforementioned errors. Ideal value: ±0.5 LSb.

28.3 Functional Description

28.3.1 Initialization

The following steps are recommended in order to initialize ADC operation:

1. Configure the resolution by writing to the Resolution Selection bit (RESSEL) in the Control A register (ADCn.CTRLA).
2. Optional: Enable the Free-Running mode by writing a ‘1’ to the Free-Running bit (FREERUN) in ADCn.CTRLA.
3. Optional: Configure the number of samples to be accumulated per conversion by writing the Sample Accumulation Number Select bits (SAMPNUM) in the Control B register (ADCn.CTRLB).
4. Configure a voltage reference by writing to the Reference Selection bit (REFSEL) in the Control C register (ADCn.CTRLC). The default is the internal voltage reference of the device (VREF, as configured there).
5. Configure the CLK_ADC by writing to the Prescaler bit field (PRESC) in the Control C register (ADCn.CTRLC).
6. Configure an input by writing to the MUXPOS bit field in the MUXPOS register (ADCn.MUXPOS).
7. Optional: Enable Start Event input by writing a ‘1’ to the Start Event Input bit (STARTEI) in the Event Control register (ADCn.EVCTRL). Configure the Event System accordingly.
8. Enable the ADC by writing a ‘1’ to the ENABLE bit in ADCn.CTRLA.

Following these steps will initialize the ADC for basic measurements, which can be triggered by an event (if configured) or by writing a ‘1’ to the Start Conversion bit (STCONV) in the Command register (ADCn.COMMAND).

28.3.1.1 I/O Lines and Connections

The I/O pins AINx and VREF are configured by the port - I/O Pin Controller.

The digital input buffer should be disabled on the pin used as input for the ADC to disconnect the digital domain from the analog domain to obtain the best possible ADC results. This is configured by the PORT peripheral.

28.3.2 Operation

28.3.2.1 Starting a Conversion

Once the input channel is selected by writing to the MUXPOS register (ADCn.MUXPOS), a conversion is triggered by writing a '1' to the ADC Start Conversion bit (STCONV) in the Command register (ADCn.COMMAND). This bit is '1' as long as the conversion is in progress. In Single Conversion mode, STCONV is cleared by hardware when the conversion is completed.

If a different input channel is selected while a conversion is in progress, the ADC will finish the current conversion before changing the channel.

Depending on the accumulator setting, the conversion result is from a single sensing operation, or from a sequence of accumulated samples. Once the triggered operation is finished, the Result Ready flag (RESRDY) in the Interrupt Flag register (ADCn.INTFLAG) is set. The corresponding interrupt vector is executed if the Result Ready Interrupt Enable bit (RESRDY) in the Interrupt Control register (ADCn.INTCTRL) is '1' and the Global Interrupt Enable bit is '1'.

A single conversion can be started by writing a '1' to the STCONV bit in ADCn.COMMAND. The STCONV bit can be used to determine if a conversion is in progress. The STCONV bit will be set during a conversion and cleared once the conversion is complete.

The RESRDY interrupt flag in ADCn.INTFLAG will be set even if the specific interrupt is disabled, allowing software to check for finished conversion by polling the flag. A conversion can thus be triggered without causing an interrupt.

Alternatively, a conversion can be triggered by an event. This is enabled by writing a '1' to the Start Event Input bit (STARTEI) in the Event Control register (ADCn.EVCTRL). Any incoming event routed to the ADC through the Event System (EVSYS) will trigger an ADC conversion. This provides a method to start conversions at predictable intervals or at specific conditions.

The event trigger input is edge sensitive. When an event occurs, STCONV in ADCn.COMMAND is set. STCONV will be cleared when the conversion is complete.

In Free-Running mode, the first conversion is started by writing the STCONV bit to '1' in ADCn.COMMAND. A new conversion cycle is started immediately after the previous conversion cycle has completed. A conversion complete will set the RESRDY flag in ADCn.INTFLAGS.

28.3.2.2 Clock Generation

Figure 28-6. ADC Prescaler

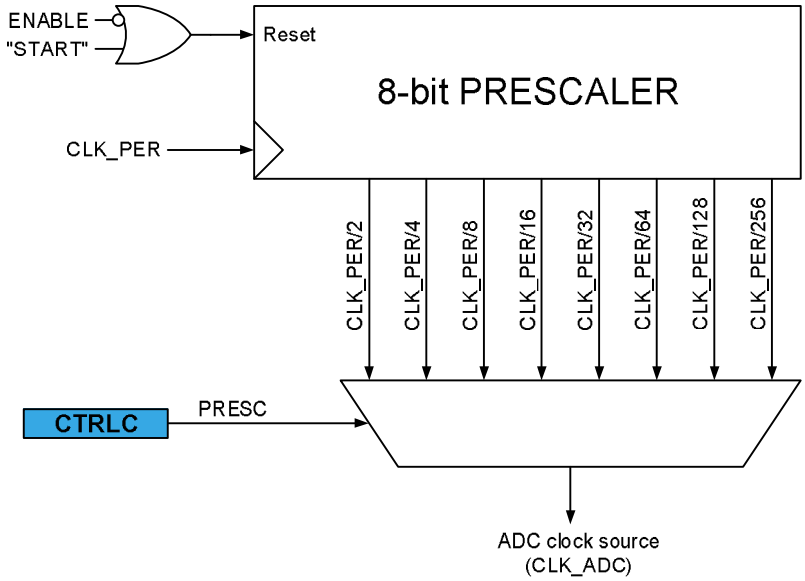

The ADC requires an input clock frequency between 50 kHz and 1.5 MHz for maximum resolution. If a lower resolution than 10 bits is selected, the input clock frequency to the ADC can be higher than 1.5 MHz to get a higher sample rate.

The ADC module contains a prescaler which generates the ADC clock (CLK_ADC) from any CPU clock (CLK_PER) above 100 kHz. The prescaling is selected by writing to the Prescaler bits (PRESC) in the Control C register

(ADCn.CTRLC). The prescaler starts counting from the moment the ADC is switched on by writing a '1' to the ENABLE bit in ADCn.CTRLA. The prescaler keeps running as long as the ENABLE bit is '1'. The prescaler counter is reset to zero when the ENABLE bit is '0'.

When initiating a conversion by writing a '1' to the Start Conversion bit (STCONV) in the Command register (ADCn.COMMAND) or from an event, the conversion starts at the following rising edge of the CLK_ADC clock cycle. The prescaler is kept reset as long as there is no ongoing conversion. This assures a fixed delay from the trigger to the actual start of a conversion in CLK_PER cycles as:

$$\text{StartDelay} = \frac{\text{PRESC}_{\text{factor}}}{2} + 2$$

Figure 28-7. Start Conversion and Clock Generation

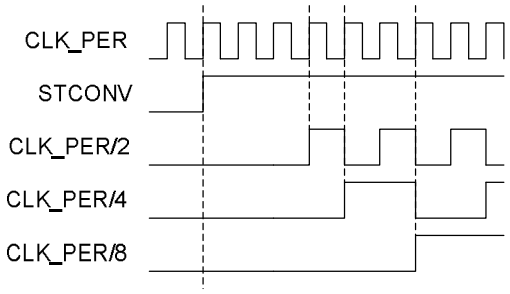

28.3.2.3 Conversion Timing

A normal conversion takes 13 CLK_ADC cycles. The actual sample-and-hold takes place two CLK_ADC cycles after the start of a conversion. Start of conversion is initiated by writing a '1' to the STCONV bit in ADCn.COMMAND. When a conversion is complete, the result is available in the Result register (ADCn.RES), and the Result Ready interrupt flag is set (RESRDY in ADCn.INTFLAG). The interrupt flag will be cleared when the result is read from the Result registers, or by writing a '1' to the RESRDY bit in ADCn.INTFLAG.

Figure 28-8. ADC Timing Diagram - Single Conversion

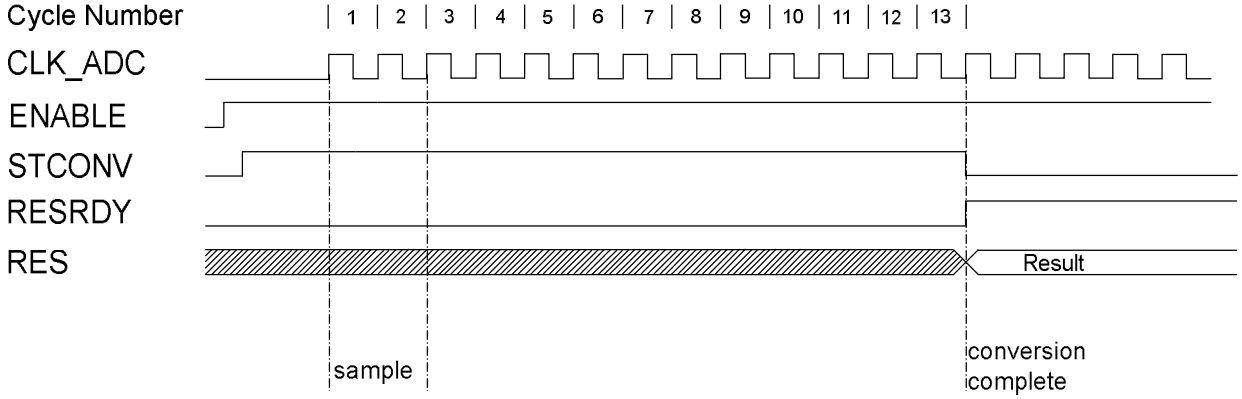

Both sampling time and sampling length can be adjusted using the Sample Delay bit field in Control D (ADCn.CTRLD) and sampling Sample Length bit field in the Sample Control register (ADCn.SAMPCTRL). Both of these control the ADC sampling time in a number of CLK_ADC cycles. This allows sampling high-impedance sources without relaxing conversion speed. See the register description for further information. Total sampling time is given by:

$$\text{SampleTime} = \frac{(2 + \text{SAMPDLY} + \text{SAMPLEN})}{f_{\text{CLK_ADC}}}$$

Figure 28-9. ADC Timing Diagram - Single Conversion With Delays

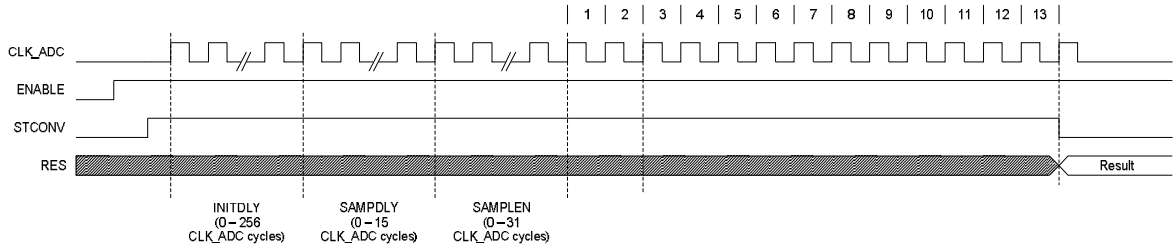

In Free-Running mode, a new conversion will be started immediately after the conversion completes, while the STCONV bit is '1'. The sampling rate R_S in free-running mode is calculated by:

$$R_S = \frac{f_{\text{CLK_ADC}}}{(13 + \text{SAMPDLY} + \text{SAMPLEN})}$$

Figure 28-10. ADC Timing Diagram - Free-Running Conversion

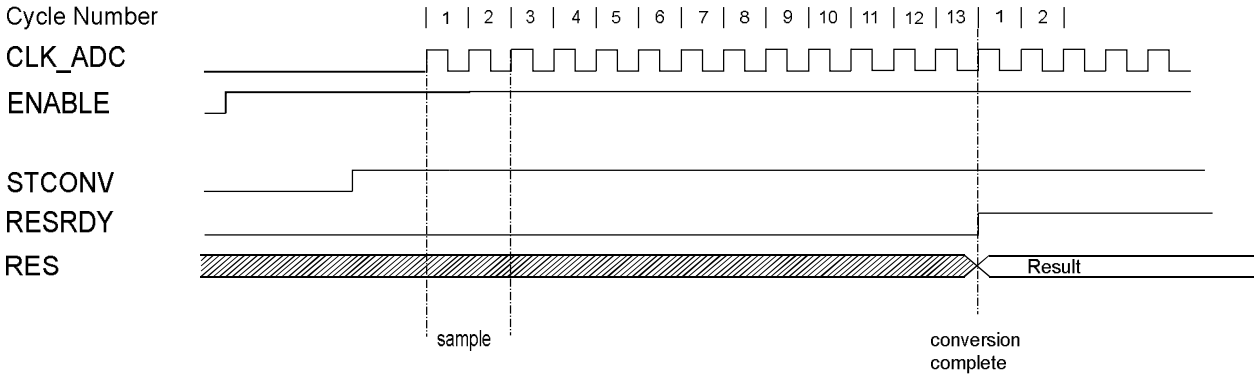

28.3.2.4 Changing Channel or Reference Selection

The MUXPOS bits in the ADCn.MUXPOS register and the REFSEL bits in the ADCn.CTRLC register are buffered through a temporary register to which the CPU has random access. This ensures that the channel and reference selections only take place at a safe point during the conversion. The channel and reference selections are continuously updated until a conversion is started.

Once the conversion starts, the channel and reference selections are locked to ensure sufficient sampling time for the ADC. Continuous updating resumes in the last CLK_ADC clock cycle before the conversion completes (RESRDY in ADCn.INTFLAGS is set). The conversion starts on the following rising CLK_ADC clock edge after the STCONV bit is written to '1'.

28.3.2.4.1 ADC Input Channels

When changing channel selection, the user should observe the following guidelines to ensure that the correct channel is selected:

In Single Conversion mode: The channel should be selected before starting the conversion. The channel selection may be changed one ADC clock cycle after writing '1' to the STCONV bit.

In Free-Running mode: The channel should be selected before starting the first conversion. The channel selection may be changed one ADC clock cycle after writing '1' to the STCONV bit. Since the next conversion has already started automatically, the next result will reflect the previous channel selection. Subsequent conversions will reflect the new channel selection.

The ADC requires a settling time after switching the input channel - refer to the Electrical Characteristics section for details.

28.3.2.4.2 ADC Voltage Reference

The reference voltage for the ADC (V_{REF}) controls the conversion range of the ADC. Input voltages that exceed the selected V_{REF} will be converted to the maximum result value of the ADC. For an ideal 10-bit ADC, this value is 0x3FF.

V_{REF} can be selected by writing the Reference Selection bits (REFSEL) in the Control C register (ADCn.CTRLC) as either V_{DD}, external reference V_{REFA}, or an internal reference from the VREF peripheral. V_{DD} is connected to the ADC through a passive switch.

When using the external reference voltage V_{REFA}, configure ADCnREFSEL[0:2] in the corresponding VREF.CTRLn register to the value that is closest, but above the applied reference voltage. For external references higher than 4.3V, use ADCnREFSEL[0:2] = 0x3.

The internal reference is generated from an internal bandgap reference through an internal amplifier, controlled by the Voltage Reference (VREF) peripheral.

28.3.2.4.3 Analog Input Circuitry

The analog input circuitry is illustrated in Figure 28-11. An analog source applied to ADCn is subjected to the pin capacitance and input leakage of that pin (represented by I_H and I_L), regardless of whether that channel is selected as input for the ADC. When the channel is selected, the source must drive the S/H capacitor through the series resistance (combined resistance in the input path).

The ADC is optimized for analog signals with an output impedance of approximately 10 kΩ or less. If such a source is used, the sampling time will be negligible. If a source with a higher impedance is used, the sampling time will depend on how long the source needs to charge the S/H capacitor, which can vary substantially.

Figure 28-11. Analog Input Schematic

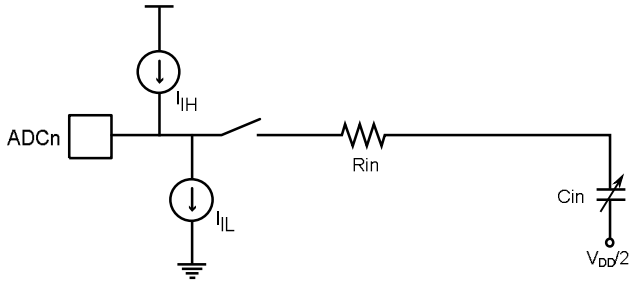

28.3.2.5 ADC Conversion Result

After the conversion is complete (RESRDY is '1'), the conversion result RES is available in the ADC Result Register (ADCn.RES). The result for a 10-bit conversion is given as:

$$\mathrm{RES} = \frac{1023 \times V_{\mathrm{IN}}}{V_{\mathrm{REF}}}$$

where V_{IN} is the voltage on the selected input pin and V_{REF} the selected voltage reference (see description for REFSEL in ADCn.CTRLC and ADCn.MUXPOS).

28.3.2.6 Temperature Measurement

The temperature measurement is based on an on-chip temperature sensor. For a temperature measurement, follow these steps:

1. Configure the internal voltage reference to 1.1V by configuring the VREF peripheral.
2. Select the internal voltage reference by writing the REFSEL bits in ADCn.CTRLC to 0x0.
3. Select the ADC temperature sensor channel by configuring the MUXPOS register (ADCn.MUXPOS). This enables the temperature sensor.
4. In ADCn.CTRLD select $\mathrm{INITDLY} \geq 32\ \mu\mathrm{s} \times f_{\mathrm{CLK_ADC}}$
5. In ADCn.SAMPCTRL select $\mathrm{SAMPLEN} \geq 32\ \mu\mathrm{s} \times f_{\mathrm{CLK_ADC}}$
6. In ADCn.CTRLC select $\mathrm{SAMPCAP} = 1$
7. Acquire the temperature sensor output voltage by starting a conversion.
8. Process the measurement result as described below.

The measured voltage has a linear relationship to the temperature. Due to process variations, the temperature sensor output voltage varies between individual devices at the same temperature. The individual compensation factors are determined during the production test and saved in the Signature Row:

- SIGROW.TEMPSENSE0 is a gain/slope correction
- SIGROW.TEMPSENSE1 is an offset correction

In order to achieve accurate results, the result of the temperature sensor measurement must be processed in the application software using factory calibration values. The temperature (in Kelvin) is calculated by this rule:

```
Temp = (((RESH << 8) | RESL) - TEMPSENSE1) * TEMPSENSE0) >> 8
```

RESH and RESL are the high and low bytes of the Result register (ADCn.RES), and TEMPSENSEn are the respective values from the Signature row.

It is recommended to follow these steps in user code:

```
int8_t sigrow_offset = SIGROW.TEMPSENSE1;  // Read signed value from signature row
uint8_t sigrow_gain = SIGROW.TEMPSENSE0;    // Read unsigned value from signature row
uint16_t adc_reading = 0;   // ADC conversion result with 1.1 V internal reference

uint32_t temp = adc_reading - sigrow_offset;
temp *= sigrow_gain;  // Result might overflow 16 bit variable (10bit+8bit)
temp += 0x80;               // Add 1/2 to get correct rounding on division below
temp >>= 8;                 // Divide result to get Kelvin
uint16_t temperature_in_K = temp;
```

28.3.2.7 Window Comparator Mode

The ADC can raise the WCOMP flag in the Interrupt and Flag register (ADCn.INTFLAG) and request an interrupt (WCOMP) when the result of a conversion is above and/or below certain thresholds. The available modes are:

- The result is under a threshold
- The result is over a threshold
- The result is inside a window (above a lower threshold, but below the upper one)
- The result is outside a window (either under the lower or above the upper threshold)

The thresholds are defined by writing to the Window Comparator Threshold registers (ADCn.WINLT and ADCn.WINHT). Writing to the Window Comparator mode bit field (WINCM) in the Control E register (ADCn.CTRLE) selects the conditions when the flag is raised and/or the interrupt is requested.

Assuming the ADC is already configured to run, follow these steps to use the Window Comparator mode:

1. Choose which Window Comparator to use (see the WINCM description in ADCn.CTRLE), and set the required threshold(s) by writing to ADCn.WINLT and/or ADCn.WINHT.
2. Optional: enable the interrupt request by writing a '1' to the Window Comparator Interrupt Enable bit (WCOMP) in the Interrupt Control register (ADCn.INTCTRL).
3. Enable the Window Comparator and select a mode by writing a non-zero value to the WINCM bit field in ADCn.CTRLE.

When accumulating multiple samples, the comparison between the result and the threshold will happen after the last sample was acquired. Consequently, the flag is raised only once, after taking the last sample of the accumulation.

28.3.3 Events

An ADC conversion can be triggered automatically by an event input if the Start Event Input bit (STARTEI) in the Event Control register (ADCn.EVCTRL) is written to '1'.

When a new result can be read from the Result register (ADCn.RES), the ADC will generate a result ready event. The event is a pulse of length one clock period and handled by the Event System (EVSYS). The ADC result ready event is always generated when the ADC is enabled.

See also the description of the Asynchronous User Channel n Input Selection in the Event System (EVSYS.ASYNCUSERn).

28.3.4 Interrupts

Table 28-1. Available Interrupt Vectors and Sources

Name	Vector Description	Conditions
RESRDY	Result Ready interrupt	The conversion result is available in the Result register (ADCn.RES).
WCOMP	Window Comparator interrupt	As defined by WINCM in ADCn.CTRLE.

When an interrupt condition occurs, the corresponding interrupt flag is set in the Interrupt Flags register of the peripheral (*peripheral*.INTFLAGS).

An interrupt source is enabled or disabled by writing to the corresponding enable bit in the peripheral's Interrupt Control (*peripheral*.INTCTRL) register.

An interrupt request is generated when the corresponding interrupt source is enabled, and the interrupt flag is set. The interrupt request remains active until the interrupt flag is cleared. See the peripheral's INTFLAGS register for details on how to clear interrupt flags.

28.3.5 Sleep Mode Operation

The ADC is by default disabled in Standby Sleep mode.

The ADC can stay fully operational in Standby Sleep mode if the Run in Standby bit (RUNSTDBY) in the Control A register (ADCn.CTRLA) is written to '1'.

When the device is entering Standby Sleep mode when RUNSTDBY is '1', the ADC will stay active, hence any ongoing conversions will be completed and interrupts will be executed as configured.

In Standby Sleep mode an ADC conversion must be triggered via the Event System (EVSYS), or the ADC must be in free-running mode with the first conversion triggered by software before entering sleep. The peripheral clock is requested if needed and is turned OFF after the conversion is completed.

When an input event trigger occurs, the positive edge will be detected, the Start Conversion bit (STCONV) in the Command register (ADCn.COMMAND) is set, and the conversion will start. When the conversion is completed, the Result Ready Flag (RESRDY) in the Interrupt Flags register (ADCn.INTFLAGS) is set and the STCONV bit in ADCn.COMMAND is cleared.

The reference source and supply infrastructure need time to stabilize when activated in Standby Sleep mode. Configure a delay for the start of the first conversion by writing a non-zero value to the Initial Delay bits (INITDLY) in the Control D register (ADCn.CTRLD).

In Power-Down Sleep mode, no conversions are possible. Any ongoing conversions are halted and will be resumed when going out of sleep. At the end of conversion, the Result Ready Flag (RESRDY) will be set, but the content of the result registers (ADCn.RES) is invalid since the ADC was halted in the middle of a conversion.

28.4 Register Summary - ADCn

Offset	Name	Bit Pos.								
0x00	CTRLA	7:0	RUNSTBY					RESSEL	FREERUN	ENABLE
0x01	CTRLB	7:0						SAMPNUM[2:0]		
0x02	CTRLC	7:0		SAMPCAP	REFSEL[1:0]			PRESC[2:0]		
0x03	CTRLD	7:0	INITDLY[2:0]			ASDV	SAMPDLY[3:0]			
0x04	CTRLE	7:0						WINCM[2:0]		
0x05	SAMPCTRL	7:0				SAMPLEN[4:0]				
0x06	MUXPOS	7:0				MUXPOS[4:0]				
0x07	Reserved									
0x08	COMMAND	7:0								STCONV
0x09	EVCTRL	7:0								STARTEI
0x0A	INTCTRL	7:0							WCOMP	RESRDY
0x0B	INTFLAGS	7:0							WCOMP	RESRDY
0x0C	DBGCTRL	7:0								DBGRUN
0x0D	TEMP	7:0	TEMP[7:0]							
0x0E ... 0x0F	Reserved									
0x10	RES	7:0	RES[7:0]							
		15:8	RES[15:8]							
0x12	WINLT	7:0	WINLT[7:0]							
		15:8	WINLT[15:8]							
0x14	WINHT	7:0	WINHT[7:0]							
		15:8	WINHT[15:8]							
0x16	CALIB	7:0								DUTYCYC

28.5 Register Description

28.5.1 Control A

Name: CTRLA
Offset: 0x00
Reset: 0x00
Property: -

Bit	7	6	5	4	3	2	1	0
	RUNSTBY					RESSEL	FREERUN	ENABLE
Access	R/W					R/W	R/W	R/W
Reset	0					0	0	0

Bit 7 – RUNSTBY Run in Standby
This bit determines whether the ADC needs to run when the chip is in Standby Sleep mode.

Bit 2 – RESSEL Resolution Selection
This bit selects the ADC resolution.

Value	Description
0	Full 10-bit resolution. The 10-bit ADC results are accumulated or stored in the ADC Result register (ADC.RES).
1	8-bit resolution. The conversion results are truncated to eight bits (MSbs) before they are accumulated or stored in the ADC Result register (ADC.RES). The two Least Significant bits are discarded.

Bit 1 – FREERUN Free-Running
Writing a '1' to this bit will enable the Free-Running mode for the data acquisition. The first conversion is started by writing the STCONV bit in ADC.COMMAND high. In the Free-Running mode, a new conversion cycle is started immediately after or as soon as the previous conversion cycle has completed. This is signaled by the RESRDY flag in ADCn.INTFLAGS.

Bit 0 – ENABLE ADC Enable

Value	Description
0	ADC is disabled
1	ADC is enabled

28.5.2 Control B

Name: CTRLB
Offset: 0x01
Reset: 0x00
Property: -

Bit	7	6	5	4	3	2	1	0
						SAMPNUM[2:0]		
Access						R/W	R/W	R/W
Reset						0	0	0

Bits 2:0 – SAMPNUM[2:0] Sample Accumulation Number Select
These bits select how many consecutive ADC sampling results are accumulated automatically. When this bit is written to a value greater than 0x0, the according number of consecutive ADC sampling results are accumulated into the ADC Result register (ADC.RES) in one complete conversion.

Value	Name	Description
0x0	NONE	No accumulation.
0x1	ACC2	2 results accumulated.
0x2	ACC4	4 results accumulated.
0x3	ACC8	8 results accumulated.
0x4	ACC16	16 results accumulated.
0x5	ACC32	32 results accumulated.
0x6	ACC64	64 results accumulated.
0x7	-	Reserved.

28.5.3 Control C

Name: CTRLC
Offset: 0x02
Reset: 0x00
Property: -

Bit	7	6	5	4	3	2	1	0
		SAMPCAP	REFSEL[1:0]			PRESC[2:0]		
Access	R	R/W	R/W	R/W	R	R/W	R/W	R/W
Reset	0	0	0	0	0	0	0	0

Bit 6 – SAMPCAP Sample Capacitance Selection
This bit selects the sample capacitance, and hence, the input impedance. The best value is dependent on the reference voltage and the application's electrical properties.

Value	Description
0	Recommended for reference voltage values below 1V.
1	Reduced size of sampling capacitance. Recommended for higher reference voltages.

Bits 5:4 – REFSEL[1:0] Reference Selection
These bits select the voltage reference for the ADC.

Value	Name	Description
0x0	INTERNAL	Internal reference
0x1	VDD	V_{DD}
0x2	VREFA	External reference V_{REFA}
Other	-	Reserved.

Bits 2:0 – PRESC[2:0] Prescaler
These bits define the division factor from the peripheral clock (CLK_PER) to the ADC clock (CLK_ADC).

Value	Name	Description
0x0	DIV2	CLK_PER divided by 2
0x1	DIV4	CLK_PER divided by 4
0x2	DIV8	CLK_PER divided by 8
0x3	DIV16	CLK_PER divided by 16
0x4	DIV32	CLK_PER divided by 32
0x5	DIV64	CLK_PER divided by 64
0x6	DIV128	CLK_PER divided by 128
0x7	DIV256	CLK_PER divided by 256

28.5.4 Control D

Name: CTRLD
Offset: 0x03
Reset: 0x00
Property: -

Bit	7	6	5	4	3	2	1	0
	INITDLY[2:0]			ASDV	SAMPDLY[3:0]			
Access	R/W	R/W	R/W	R/W	R/W	R/W	R/W	R/W
Reset	0	0	0	0	0	0	0	0

Bits 7:5 – INITDLY[2:0] Initialization Delay
These bits define the initialization/start-up delay before the first sample when enabling the ADC or changing to an internal reference voltage. Setting this delay will ensure that the reference, MUXes, etc. are ready before starting the first conversion. The initialization delay will also take place when waking up from deep sleep to do a measurement. The delay is expressed as a number of CLK_ADC cycles.

Value	Name	Description
0x0	DLY0	Delay 0 CLK_ADC cycles.
0x1	DLY16	Delay 16 CLK_ADC cycles.
0x2	DLY32	Delay 32 CLK_ADC cycles.
0x3	DLY64	Delay 64 CLK_ADC cycles.
0x4	DLY128	Delay 128 CLK_ADC cycles.
0x5	DLY256	Delay 256 CLK_ADC cycles.
Other	-	Reserved

Bit 4 – ASDV Automatic Sampling Delay Variation
Writing this bit to ‘1’ enables automatic sampling delay variation between ADC conversions. The purpose of varying sampling instant is to randomize the sampling instant and thus avoid standing frequency components in the frequency spectrum. The value of the SAMPDLY bits is automatically incremented by one after each sample.
When the Automatic Sampling Delay Variation is enabled and the SAMPDLY value reaches 0xF, it wraps around to 0x0.

Value	Name	Description
0	ASVOFF	The Automatic Sampling Delay Variation is disabled.
1	ASVON	The Automatic Sampling Delay Variation is enabled.

Bits 3:0 – SAMPDLY[3:0] Sampling Delay Selection
These bits define the delay between consecutive ADC samples. The programmable Sampling Delay allows modifying the sampling frequency during hardware accumulation, to suppress periodic noise sources that may otherwise disturb the sampling. The SAMPDLY field can also be modified automatically from one sampling cycle to another, by setting the ASDV bit. The delay is expressed as CLK_ADC cycles and is given directly by the bit field setting. The sampling cap is kept open during the delay.

28.5.5 Control E

Name: CTRLE
Offset: 0x4
Reset: 0x00
Property: -

Bit	7	6	5	4	3	2	1	0
						WINCM[2:0]		
Access						R/W	R/W	R/W
Reset						0	0	0

Bits 2:0 – WINCM[2:0] Window Comparator Mode
This field enables and defines when the interrupt flag is set in Window Comparator mode. RESULT is the 16-bit accumulator result. WINLT and WINHT are 16-bit lower threshold value and 16-bit higher threshold value, respectively.

Value	Name	Description
0x0	NONE	No Window Comparison (default)
0x1	BELOW	*RESULT < WINLT*
0x2	ABOVE	*RESULT > WINHT*
0x3	INSIDE	*WINLT < RESULT < WINHT*
0x4	OUTSIDE	*RESULT < WINLT or RESULT >WINHT)*
Other	-	Reserved

28.5.6 Sample Control

Name: SAMPCTRL
Offset: 0x5
Reset: 0x00
Property: -

Bit	7	6	5	4	3	2	1	0
				SAMPLEN[4:0]				
Access				R/W	R/W	R/W	R/W	R/W
Reset				0	0	0	0	0

Bits 4:0 – SAMPLEN[4:0] Sample Length
These bits extend the ADC sampling length in a number of CLK_ADC cycles. By default, the sampling time is two CLK_ADC cycles. Increasing the sampling length allows sampling sources with higher impedance. The total conversion time increases with the selected sampling length.

28.5.7 MUXPOS

Name: MUXPOS
Offset: 0x06
Reset: 0x00
Property: -

Bit	7	6	5	4	3	2	1	0
				MUXPOS[4:0]				
Access				R/W	R/W	R/W	R/W	R/W
Reset				0	0	0	0	0

Bits 4:0 – MUXPOS[4:0] MUXPOS
This bit field selects which single-ended analog input is connected to the ADC. If these bits are changed during a conversion, the change will not take effect until this conversion is complete.

MUXPOS	Name	Input
0x00-0x0F	AIN0-AIN15	ADC input pin 0 - 15
0x10-0x1B	-	Reserved
0x1C	DACREF0	DAC reference in AC0
0x1D	-	Reserved
0x1E	TEMPSENSE	Temperature Sensor
0x1F	GND	GND
Other	-	Reserved

28.5.8 Command

Name: COMMAND
Offset: 0x08
Reset: 0x00
Property: -

Bit	7	6	5	4	3	2	1	0
								STCONV
Access								R/W
Reset								0

Bit 0 – STCONV Start Conversion
Writing a ‘1’ to this bit will start a single measurement. If in Free-Running mode this will start the first conversion. STCONV will read as ‘1’ as long as a conversion is in progress. When the conversion is complete, this bit is automatically cleared.

28.5.9 Event Control

Name: EVCTRL
Offset: 0x09
Reset: 0x00
Property: -

Bit	7	6	5	4	3	2	1	0
								STARTEI
Access								R/W
Reset								0

Bit 0 – STARTEI Start Event Input
This bit enables using the event input as trigger for starting a conversion.

28.5.10 Interrupt Control

Name: INTCTRL
Offset: 0x0A
Reset: 0x00
Property: -

Bit	7	6	5	4	3	2	1	0
							WCOMP	RESRDY
Access							R/W	R/W
Reset							0	0

Bit 1 – WCOMP Window Comparator Interrupt Enable
Writing a '1' to this bit enables window comparator interrupt.

Bit 0 – RESRDY Result Ready Interrupt Enable
Writing a '1' to this bit enables result ready interrupt.

28.5.11 Interrupt Flags

Name: INTFLAGS
Offset: 0x0B
Reset: 0x00
Property: -

Bit	7	6	5	4	3	2	1	0
							WCOMP	RESRDY
Access							R/W	R/W
Reset							0	0

Bit 1 – WCOMP Window Comparator Interrupt Flag
This window comparator flag is set when the measurement is complete and if the result matches the selected Window Comparator mode defined by WINCM (ADCn.CTRLE). The comparison is done at the end of the conversion. The flag is cleared by either writing a ‘1’ to the bit position or by reading the Result register (ADCn.RES). Writing a ‘0’ to this bit has no effect.

Bit 0 – RESRDY Result Ready Interrupt Flag
The result ready interrupt flag is set when a measurement is complete and a new result is ready. The flag is cleared by either writing a ‘1’ to the bit location or by reading the Result register (ADCn.RES). Writing a ‘0’ to this bit has no effect.

28.5.12 Debug Run

Name: DBGCTRL
Offset: 0x0C
Reset: 0x00
Property: -

Bit	7	6	5	4	3	2	1	0
								DBGRUN
Access								R/W
Reset								0

Bit 0 – DBGRUN Debug Run

Value	Description
0	The peripheral is halted in Break Debug mode and ignores events
1	The peripheral will continue to run in Break Debug mode when the CPU is halted

28.5.13 Temporary

Name: TEMP
Offset: 0x0D
Reset: 0x00
Property: -

The Temporary register is used by the CPU for single-cycle, 16-bit access to the 16-bit registers of this peripheral. It can be read and written by software. Refer to 16-bit access in the AVR CPU chapter. There is one common Temporary register for all the 16-bit registers of this peripheral.

Bit	7	6	5	4	3	2	1	0
	TEMP[7:0]							
Access	R/W	R/W	R/W	R/W	R/W	R/W	R/W	R/W
Reset	0	0	0	0	0	0	0	0

Bits 7:0 – TEMP[7:0] Temporary
Temporary register for read/write operations in 16-bit registers.

28.5.14 Result

Name: RES
Offset: 0x10
Reset: 0x00
Property: -

The ADCn.RESL and ADCn.RESH register pair represents the 16-bit value, ADCn.RES. The low byte [7:0] (suffix L) is accessible at the original offset. The high byte [15:8] (suffix H) can be accessed at offset + 0x01.

If the analog input is higher than the reference level of the ADC, the 10-bit ADC result will be equal the maximum value of 0x3FF. Likewise, if the input is below 0V, the ADC result will be 0x000. As the ADC cannot produce a result above 0x3FF values, the accumulated value will never exceed 0xFFC0 even after the maximum allowed 64 accumulations.

Bit	15	14	13	12	11	10	9	8
	RES[15:8]							
Access	R	R	R	R	R	R	R	R
Reset	0	0	0	0	0	0	0	0

Bit	7	6	5	4	3	2	1	0
	RES[7:0]							
Access	R	R	R	R	R	R	R	R
Reset	0	0	0	0	0	0	0	0

Bits 15:8 – RES[15:8] Result high byte
These bits constitute the MSB of the ADCn.RES register, where the MSb is RES[15]. The ADC itself has a 10-bit output, ADC[9:0], where the MSb is ADC[9]. The data format in ADC and Digital Accumulation is 1's complement, where 0x0000 represents the zero and 0xFFFF represents the largest number (full scale).

Bits 7:0 – RES[7:0] Result low byte
These bits constitute the LSB of ADC/Accumulator Result, (ADCn.RES) register. The data format in ADC and Digital Accumulation is 1's complement, where 0x0000 represents the zero and 0xFFFF represents the largest number (full scale).

28.5.15 Window Comparator Low Threshold

Name: WINLT
Offset: 0x12
Reset: 0x00
Property: -

This register is the 16-bit low threshold for the digital comparator monitoring the ADCn.RES register. The ADC itself has a 10-bit output, RES[9:0], where the MSb is RES[9]. The data format in ADC and Digital Accumulation is 1's complement, where 0x0000 represents the zero and 0xFFFF represents the largest number (full scale).

The ADCn.WINLTH and ADCn.WINLTL register pair represents the 16-bit value, ADCn.WINLT. The low byte [7:0] (suffix L) is accessible at the original offset. The high byte [15:8] (suffix H) can be accessed at offset + 0x01.

When accumulating samples, the window comparator thresholds are applied to the accumulated value and not on each sample.

Bit	15	14	13	12	11	10	9	8
	WINLT[15:8]							
Access	R/W	R/W	R/W	R/W	R/W	R/W	R/W	R/W
Reset	0	0	0	0	0	0	0	0

Bit	7	6	5	4	3	2	1	0
	WINLT[7:0]							
Access	R/W	R/W	R/W	R/W	R/W	R/W	R/W	R/W
Reset	0	0	0	0	0	0	0	0

Bits 15:8 – WINLT[15:8] Window Comparator Low Threshold High Byte
These bits hold the MSB of the 16-bit register.

Bits 7:0 – WINLT[7:0] Window Comparator Low Threshold Low Byte
These bits hold the LSB of the 16-bit register.

28.5.16 Window Comparator High Threshold

Name: WINHT
Offset: 0x14
Reset: 0x00
Property: -

This register is the 16-bit high threshold for the digital comparator monitoring the ADCn.RES register. The ADC itself has a 10-bit output, RES[9:0], where the MSb is RES[9]. The data format in ADC and Digital Accumulation is 1's complement, where 0x0000 represents the zero and 0xFFFF represents the largest number (full scale).

The ADCn.WINHTH and ADCn.WINHTL register pair represents the 16-bit value, ADCn.WINHT. The low byte [7:0] (suffix L) is accessible at the original offset. The high byte [15:8] (suffix H) can be accessed at offset + 0x01.

Bit	15	14	13	12	11	10	9	8
	WINHT[15:8]							
Access	R/W	R/W	R/W	R/W	R/W	R/W	R/W	R/W
Reset	0	0	0	0	0	0	0	0

Bit	7	6	5	4	3	2	1	0
	WINHT[7:0]							
Access	R/W	R/W	R/W	R/W	R/W	R/W	R/W	R/W
Reset	0	0	0	0	0	0	0	0

Bits 15:8 – WINHT[15:8] Window Comparator High Threshold High Byte
These bits hold the MSB of the 16-bit register.

Bits 7:0 – WINHT[7:0] Window Comparator High Threshold Low Byte
These bits hold the LSB of the 16-bit register.

28.5.17 Calibration

Name: CALIB
Offset: 0x16
Reset: 0x01
Property: -

Bit	7	6	5	4	3	2	1	0
								DUTYCYC
Access								R/W
Reset								1

Bit 0 – DUTYCYC Duty Cycle
This bit determines the duty cycle of the ADC clock.
ADC_{clk} > 1.5 MHz requires a minimum operating voltage of 2.7V.

Value	Description
0	50% Duty Cycle must be used if ADC_{clk} > 1.5 MHz
1	25% Duty Cycle (high 25% and low 75%) must be used for ADC_{clk} ≤ 1.5 MHz

29. UPDI - Unified Program and Debug Interface

29.1 Features

- Programming:
  - External programming through UPDI one-wire (1W) interface
    - Uses a dedicated pin of the device for programming
    - No GPIO pins occupied during operation
    - Asynchronous Half-Duplex UART protocol towards the programmer with the programming time up to 0.9 Mbps.
- Debugging:
  - Memory mapped access to device address space (NVM, RAM, I/O)
  - No limitation on device clock frequency
  - Unlimited number of user program breakpoints
  - Two hardware breakpoints
  - Run-time readout of CPU Program Counter (PC), Stack Pointer (SP), and Status register (SREG) for code profiling
  - Program flow control
    - Go, Stop, Reset, Step Into
  - Non-intrusive run-time chip monitoring without accessing system registers
    - Monitor CRC status and sleep status
- Unified Programming and Debug Interface (UPDI):
  - Built-in error detection with error signature readout
  - Frequency measurement of internal oscillators using the Event System

29.2 Overview

The Unified Program and Debug Interface (UPDI) is a proprietary interface for external programming and on-chip debugging of a device.

The UPDI supports programming of nonvolatile memory (NVM) space; FLASH, EEPROM, fuses, lockbits, and the user row. In addition, the UPDI can access the entire I/O and data space of the device. See the NVM controller documentation for programming via the NVM controller and executing NVM controller commands.

Programming and debugging are done through the UPDI Physical interface (UPDI PHY), which is a one-wire UART-based half duplex interface using a dedicated pin for data reception and transmission. Clocking of UPDI PHY is done by the internal oscillator. The UPDI access layer grants access to the bus matrix, with memory mapped access to system blocks such as memories, NVM, and peripherals.

The Asynchronous System Interface (ASI) provides direct interface access to On-Chip Debugging (OCD), NVM, and System Management features. This gives the debugger direct access to system information, without requesting bus access.

29.2.1 Block Diagram

Figure 29-1. UPDI Block Diagram

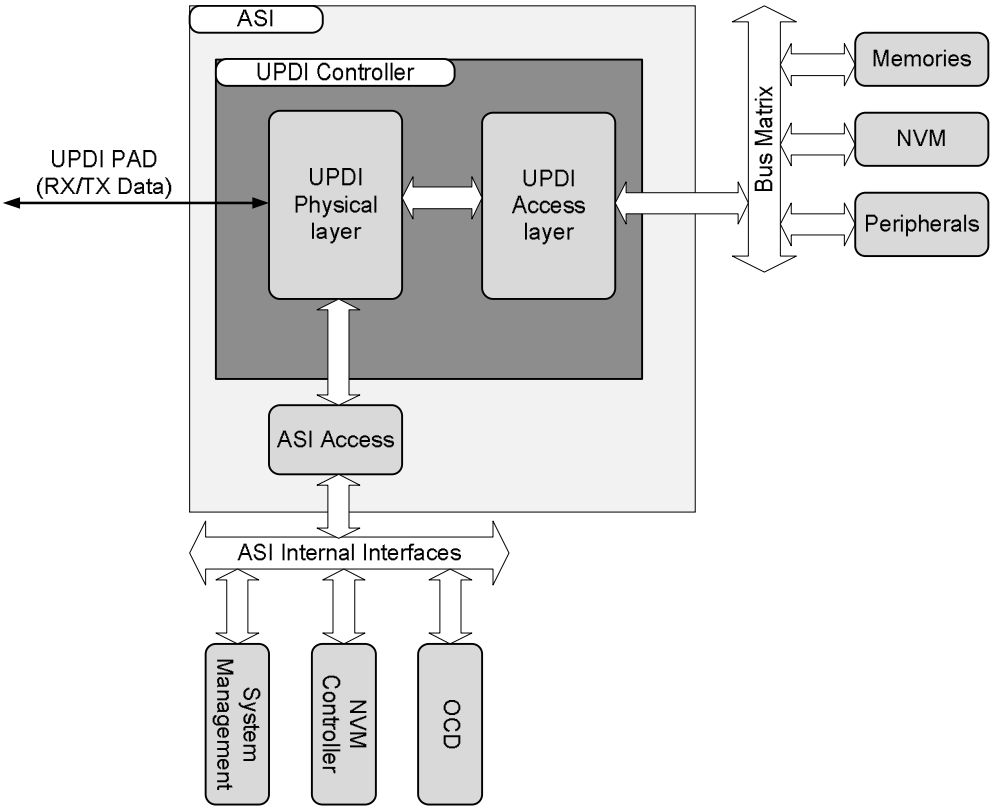

29.2.2 Clocks

The UPDI Physical (UPDI PHY) layer and UPDI Access (UPDI ACC) layer can operate on different clock domains. The UPDI PHY layer clock is derived from the internal oscillator, and the UPDI ACC layer clock is the same as the system clock. There is a synchronization boundary between the UPDI PHY layer and the UPDI ACC layer, which ensures correct operation between the clock domains. The UPDI clock output frequency is selected through the ASI, and the default UPDI clock start-up frequency is 4 MHz after enabling the UPDI. The UPDI clock frequency is changed by writing the UPDI Clock Select (UPDICLKSEL) bits in the ASI_CTRLA register.

Figure 29-2. UPDI Clock Domains

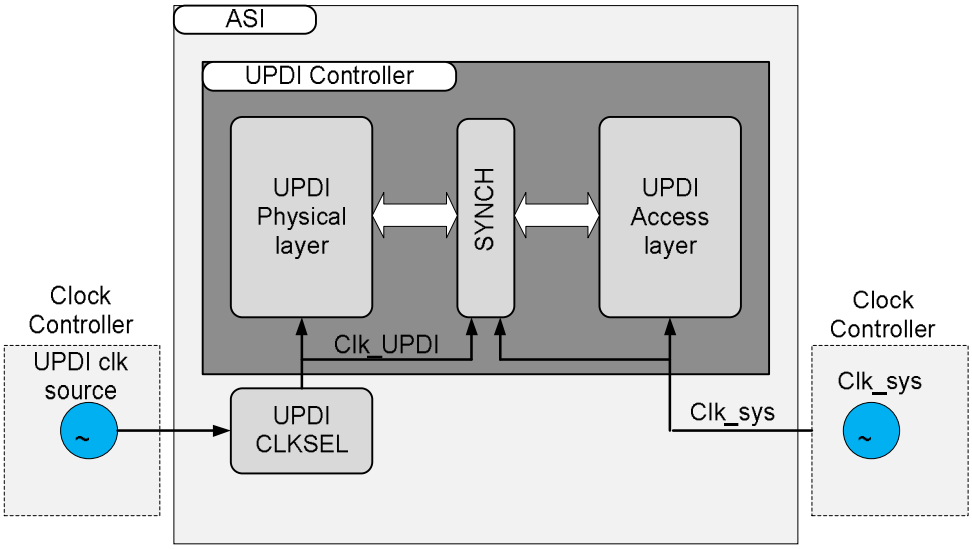

29.3 Functional Description

29.3.1 Principle of Operation

Communication through the UPDI is based on standard UART communication, using a fixed frame format, and automatic baud rate detection for clock and data recovery. In addition to the data frame, there are several control frames which are important to the communication. The supported frame formats are presented in Figure 29-3.

Figure 29-3. Supported UPDI Frame Formats

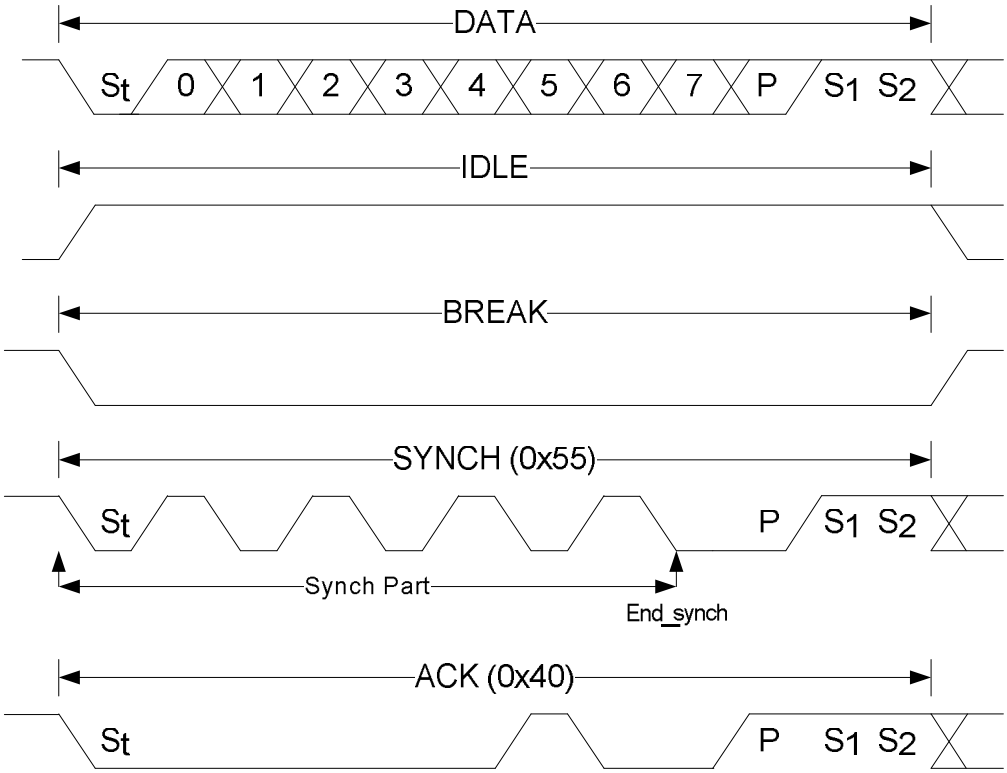

Data Frame	Data frame consists of one Start bit (always low), eight data bits, one parity bit (even parity), and two Stop bits (always high). If the Parity bit, or Stop bits have an incorrect value, an error will be detected and signalized by the UPDI. The parity bit-check in the UPDI can be disabled by writing the Parity Disable (PARD) bit in UPDI.CTRLA, in which case the parity generation from the debugger can be ignored.
IDLE Frame	Special frame that consists of 12 high bits. This is the same as keeping the transmission line in an Idle state.
BREAK	Special frame that consists of 12 low bits. The BREAK frame is used to reset the UPDI back to its default state and is typically used for error recovery.
SYNCH	The SYNCH frame (0x55) is used by the Baud Rate Generator to set the baud rate for the coming transmission. A SYNCH character is always expected by the UPDI in front of every new instruction, and after a successful BREAK has been transmitted.
ACK	The Acknowledge (ACK) character is transmitted from the UPDI whenever an ST or STS instruction has successfully crossed the synchronization boundary and have gained bus access. When an ACK is received by the debugger, the next transmission can start.

29.3.1.1 UPDI UART

All transmission and reception of serial data on the UPDI is achieved using the UPDI frames presented in Figure 29-3. Communication is initiated from the master (debugger/programmer) side, and every transmission must start with a SYNCH character upon which the UPDI can recover the transmission baud rate, and store this setting for the coming data. The baud rate set by the SYNCH character will be used for both reception and transmission for the instruction byte received after the SYNCH. See 29.3.3 UPDI Instruction Set for details on when the next SYNCH character is expected in the instruction stream.

There is no writable baud rate register in the UPDI, so the baud rate sampled from the SYNCH character is used for data recovery by sampling the Start bit, and performing a majority vote on the middle samples.

The transmission baud rate of the PDI PHY is related to the selected UPDI clock, which can be adjusted by UPDI Clock Select (UPDICLKSEL) bit in UPDI.ASI_CTRLA. See Table 29-1 for recommended maximum and minimum baud rate settings. The receive and transmit baud rates are always the same within the accuracy of the auto-baud.

Table 29-1. Recommended UART Baud Rate Based on UPDICLKSEL Setting

UPDICLKSEL[1:0]	Max. Recommended Baud Rate	Min. Recommended Baud Rate
0x1 (16 MHz)	0.9 Mbps	0.300 kbps
0x2 (8 MHz)	450 kbps	0.150 kbps
0x3 (4 MHz) - Default	225 kbps	0.075 kbps

The UPDI Baud Rate Generator utilizes fractional baud counting to minimize the transmission error. With the fixed frame format used by the UPDI, the maximum and recommended receiver transmission error limits can be seen in the following table:

Table 29-2. Receiver Baud Rate Error

Data + Parity Bits	R_{slow}	R_{fast}	Max. Total Error [%]	Recommended Max. RX Error [%]
9	96.39	104.76	+4.76/-3.61	+1.5/-1.5

29.3.1.2 BREAK Character

The BREAK character is used to reset the internal state of the UPDI to the default setting. This is useful if the UPDI enters an error state due to a communication error, or when the synchronization between the debugger and the UPDI is lost.

To ensure that a BREAK is successfully received by the UPDI in all cases, the debugger should send two consecutive BREAK characters. If a single BREAK is sent while the UPDI is receiving or transmitting (possibly at a very low baud rate), the UPDI will not detect it. However, this will cause a frame error (RX) or contention error (TX), and abort the ongoing operation. Then, the UPDI will detect the next BREAK. The first BREAK will be detected if the UPDI is idle.

No SYNCH character is required before the BREAK because the BREAK is used to reset the UPDI from any state. This means that the UPDI will sample the BREAK with the last baud rate setting and be derived from the last valid

SYNCH character. If the communication error was caused by an incorrect sampling of the SYNCH character, the device will not know the baud rate. To ensure that the BREAK will be detected in all cases, the recommended BREAK duration should be 12-bit times the bit duration at the lowest possible baud rate (8192 times the CLK_PER) as shown in Table 29-3).

Table 29-3. Recommended BREAK Character Duration

UPDICLKSEL[1:0]	Recommended BREAK Character Duration
0x1 (16 MHz)	6.15 ms
0x2 (8 MHz)	12.30 ms
0x3 (4 MHz) - Default	24.60 ms

29.3.2 Operation

The UPDI must be enabled before the UART communication can start.

29.3.2.1 UPDI Enable

The dedicated UPDI pad is configured as an input with pull-up.When the pull-up is detected by a connected debugger, the UPDI enable sequence, as depicted below, is started.

Figure 29-4. UPDI Enable Sequence

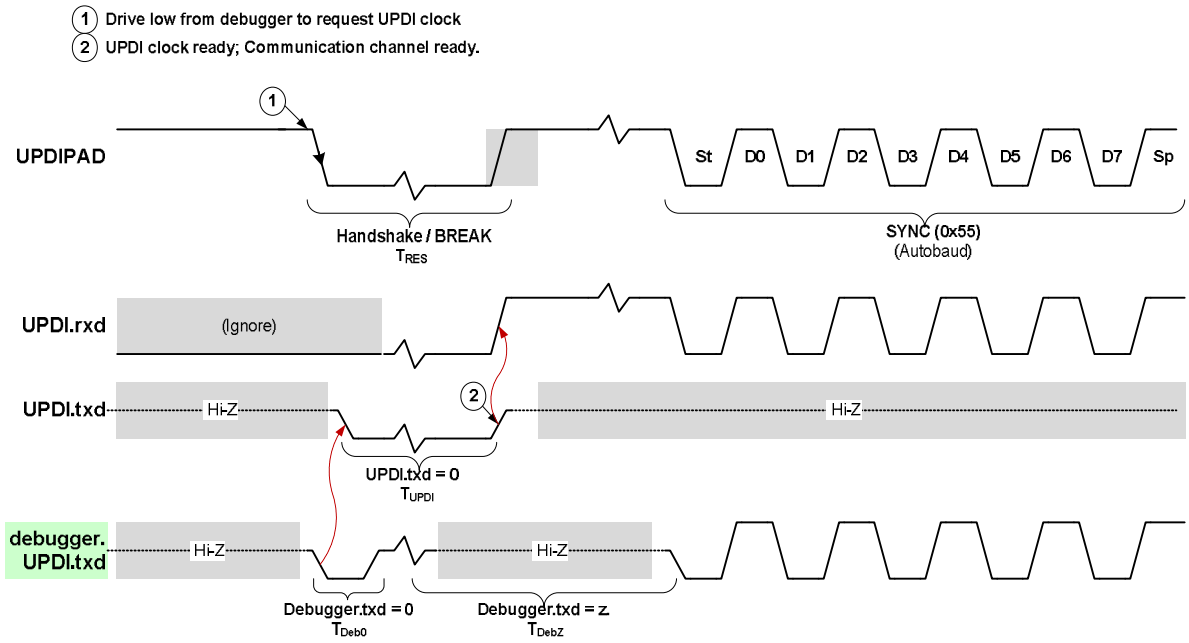

Table 29-4. Timing in the Figure

Timing Label	Max.	Min.
T_{RES}	200 µs	10 µs
T_{UPDI}	200 µs	10 µs
T_{Deb0}	1 µs	200 ns
T_{DebZ}	14 ms	200 µs

When the pull-up is detected, the debugger initiates the enable sequence by driving the line low for a duration of T_{Deb0}.

The negative edge is detected by the UPDI, which starts the UPDI clock. The UPDI will continue to drive the line low until the clock is stable and ready for the UPDI to use. The duration of T_{UPDI} will vary, depending on the status of the oscillator when the UPDI is enabled. After this duration, the data line will be released by the UPDI and pulled high.

When the debugger detects that the line is high, the initial SYNCH character (0x55) must be transmitted to synchronize the UPDI communication data rate. If the Start bit of the SYNCH character is not sent within maximum T_{DebZ}, the UPDI will disable itself, and the UPDI enabling sequence must be re-initiated. The UPDI is disabled if the timing is violated to avoid the UPDI being enabled unintentionally.

After successful SYNCH character transmission, the first instruction frame can be transmitted.

29.3.2.2 UPDI Disable

Any programming or debug session should be terminated by writing the UPDI Disable (UPDIDIS) bit in UPDI.CTRLB. Writing this bit will reset the UPDI including any decoded KEYs (see the KEY instruction section) and disable the oscillator request for the module. If the disable operation is not performed, the UPDI and the oscillators request will remain enabled. This causes power consumption increased for the application.

During the enable sequence the UPDI can disable itself in case of a faulty enable sequence. There are two cases that will cause an automatic disable:

- A SYNCH character is not sent within 13.5 ms after the initial enable pulse described in 29.3.2.1 UPDI Enable.
- The first SYNCH character after an initiated enable is too short or too long to be detected as a valid SYNCH character. See Table 29-1 for recommended baud rate operating ranges.

29.3.2.3 UPDI Communication Error Handling

The UPDI contains a comprehensive error detection system that provides information to the debugger when recovering from an error scenario. The error detection consists of detecting physical transmission errors like parity error, contention error, and frame error, to more high-level errors like access timeout error. See the UPDI Error Signature (PESIG) bits in UPDI.STATUSB register for an overview of the available error signatures.

Whenever the UPDI detects an error, it will immediately enter an internal error state to avoid unwanted system communication. In the error state, the UPDI will ignore all incoming data requests, except if a BREAK character is transmitted. The following procedure should always be applied when recovering from an error condition.

- Send a BREAK character. See 29.3.1.2 BREAK Character for recommended BREAK character handling.
- Send a SYNCH character at the desired baud rate for the next data transfer. Upon receiving a BREAK the UPDI oscillator setting in UPDI.ASI_CTRLA is reset to the 4 MHz default UPDI clock selection. This affects the baud rate range of the UPDI according to Table 29-1.
- Execute a Load Control Status (LDCS) instruction to read the UPDI Error Signature (PESIG) bit in the UPDI.STATUSB register and get the information about the occurred error. The error signature in the STATUSB.PESIG will be cleared when the register is read.
- The UPDI is now recovered from the error state and ready to receive the next SYNCH character and instruction.

29.3.2.4 Direction Change

In order to ensure correct timing for half duplex UART operation, the UPDI has a built-in Guard Time mechanism to relax the timing when changing direction from RX mode to TX mode. The Guard Time is a number of IDLE bits inserted before the next Start bit is transmitted. The number of IDLE bits can be configured through the Guard Time Value (GTVAL) bit in the UPDI.CTRLA register. The duration of each IDLE bit is given by the baud rate used by the current transmission.

Do not set CTRLA.GTVAL to 0x7 without IDLE bits.

Figure 29-5. UPDI Direction Change by Inserting IDLE Bits

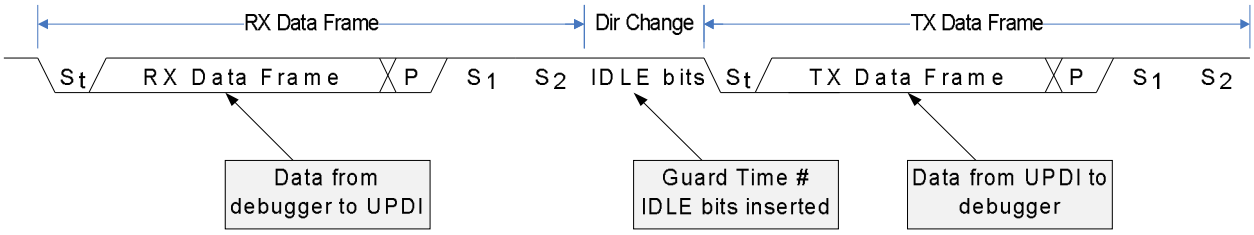

The UPDI Guard Time is the minimum IDLE time (see CTRLA.GTVAL) that the connected debugger will experience when waiting for data from the UPDI. The Maximum is the same as timeout (for example, 65536 UPDI clock cycles).

The IDLE time before a transmission will be more than the expected Guard Time when the synchronization time plus the data bus accessing time is longer than the Guard Time. For example, the system is running on a slow clock.

29.3.3 UPDI Instruction Set

Communication through the UPDI is based on a small instruction set. The instructions are used to access the internal UPDI and ASI Control and Status (CS) space, as well as the memory mapped system space. All instructions are byte instructions and must be preceded by a SYNCH character to determine the baud rate for the communication. See 29.3.1.1 UPDI UART for information about setting the baud rate for the transmission. The following figure gives an overview of the UPDI instruction set.

Figure 29-6. UPDI Instruction Set Overview

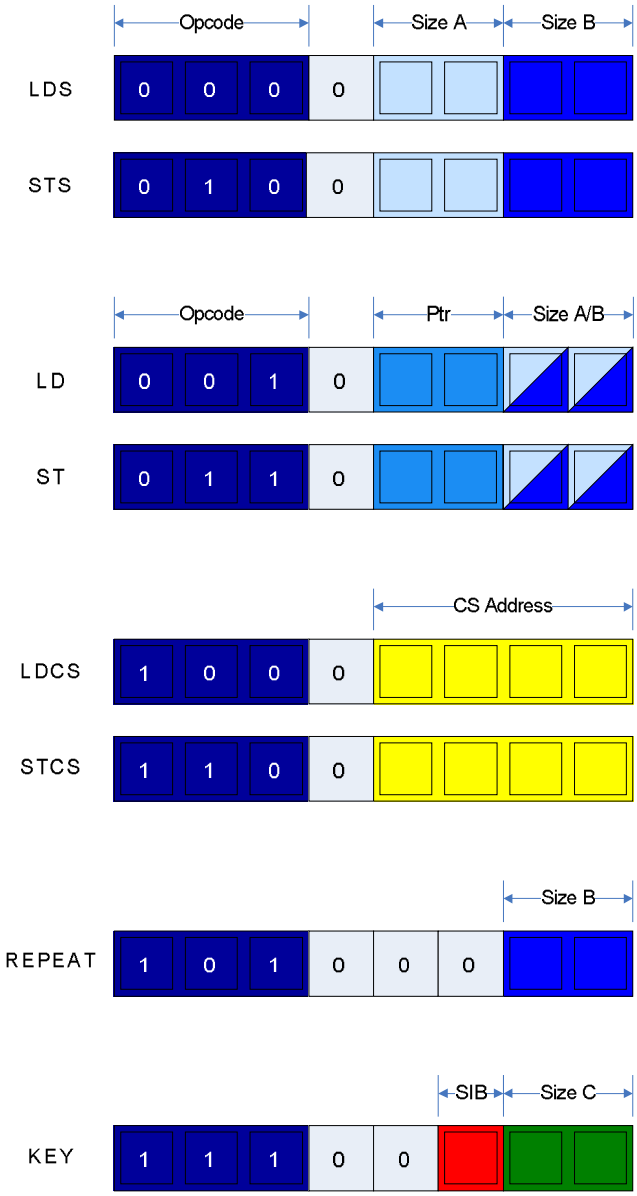

OPCODE			
0	0	0	LDS
0	0	1	LD
0	1	0	STS
0	1	1	ST
1	0	0	LDCS (LDS Control/Status)
1	0	1	REPEAT
1	1	0	STCS (STS Control/Status)
1	1	1	KEY

Size A - Address size		
0	0	Byte
0	1	Word (2 Bytes)
1	0	Reserved
1	1	Reserved

Ptr - Pointer access		
0	0	*(ptr)
0	1	*(ptr++)
1	0	ptr
1	1	Reserved

Size B - Data size		
0	0	Byte
0	1	Word (2 Bytes)
1	0	Reserved
1	1	Reserved

CS Address (CS - Control/Status reg.)				
0	0	0	0	Reg 0
0	0	0	1	Reg 1
0	0	1	0	Reg 2
0	0	1	1	Reg 3
0	1	0	0	Reg 4 (ASI CS space)
.....				
1	1	1	1	Reserved

Size C - Key size		
0	0	64 bits (8 Bytes)
0	1	128 bits (16 Bytes)
1	0	Reserved
1	1	Reserved

SIB – System Information Block sel.	
0	Receive KEY
1	Send SIB

29.3.3.1 LDS - Load Data from Data Space Using Direct Addressing

The LDS instruction is used to load data from the bus matrix and into the serial shift register for serial readout. The LDS instruction is based on direct addressing, and the address must be given as an operand to the instruction for the data transfer to start. Maximum supported size for address and data is 16 bits. LDS instruction supports repeated memory access when combined with the REPEAT instruction.

As shown in Figure 29-7, after issuing the SYNCH character followed by the LDS instruction, the number of desired address bytes, as indicated by the Size A field in the instruction, must be transmitted. The output data size is selected by the Size B field and is issued after the specified Guard Time. When combined with the REPEAT instruction, the address must be sent in for each iteration of the repeat, meaning after each time the output data sampling is done. There is no automatic address increment when using REPEAT with LDS, as it uses a direct addressing protocol.

Figure 29-7. LDS Instruction Operation

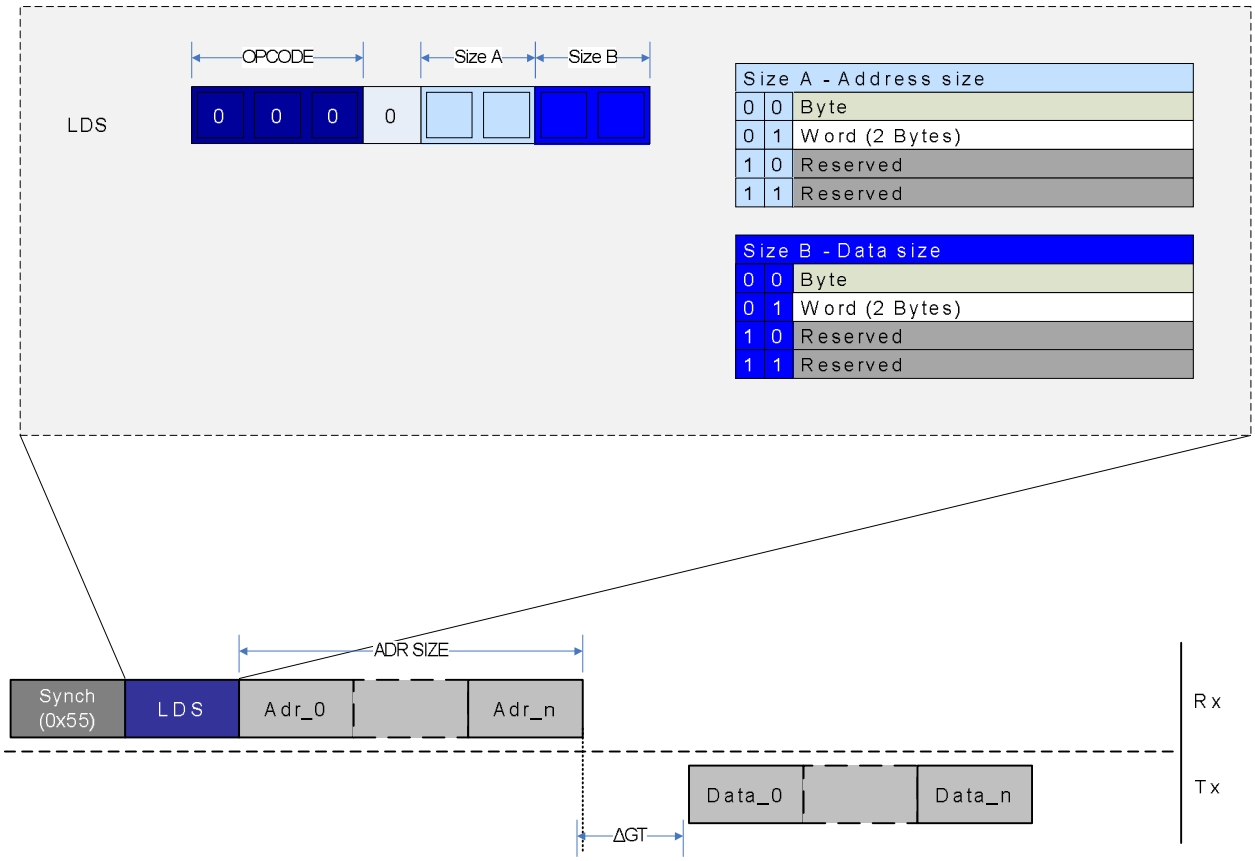

29.3.3.2 STS - Store Data to Data Space Using Direct Addressing

The STS instruction is used to store data that is shifted serially into the PHY layer to the bus matrix address space. The STS instruction is based on direct addressing, where the address is the first set of operands, and data is the second set. The size of the address and data operands are given by the size fields presented in the figure below. The maximum size for both address and data is 16 bits.

STS supports repeated memory access when combined with the REPEAT instruction.

Figure 29-8. STS Instruction Operation

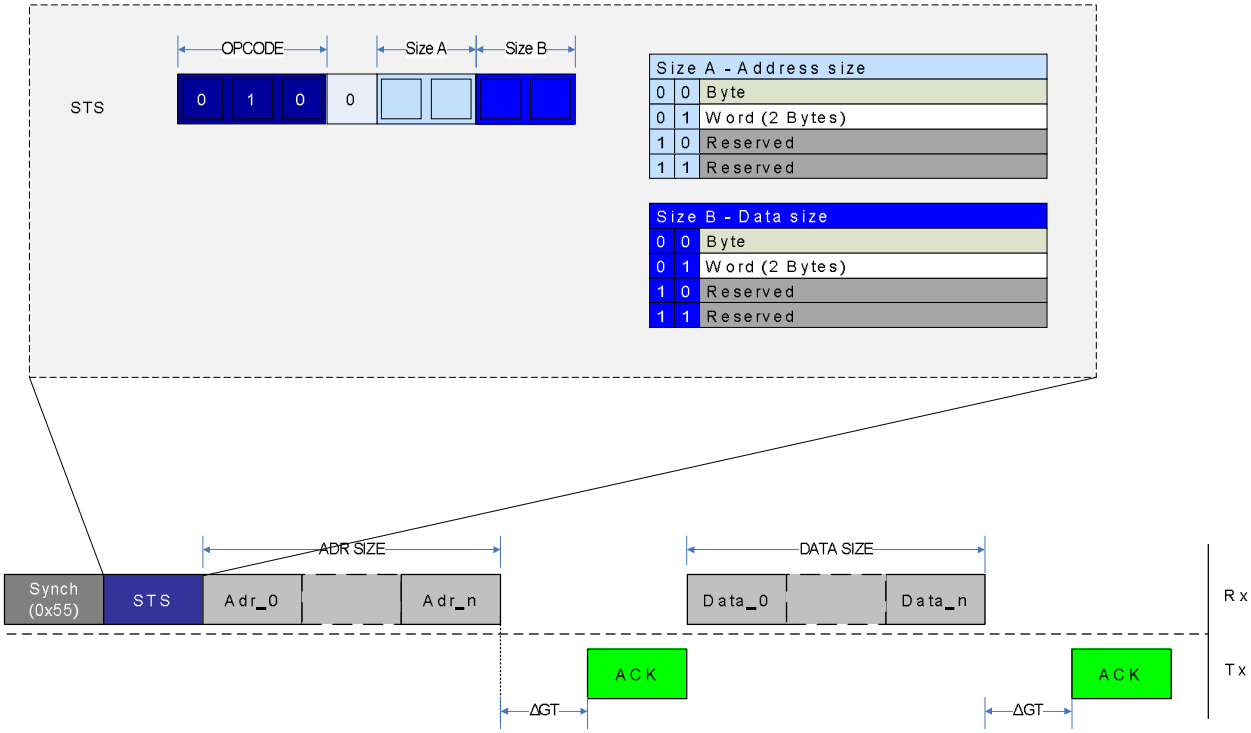

The transfer protocol for an STS instruction is depicted in the figure as well, following this sequence:

1. The address is sent.
2. An Acknowledge (ACK) is sent back from the UPDI if the transfer was successful.
3. The number of bytes as specified in the STS instruction is sent.
4. A new ACK is received after the data has been successfully transferred.

29.3.3.3 LD - Load Data from Data Space Using Indirect Addressing

The LD instruction is used to load data from the bus matrix and into the serial shift register for serial readout. The LD instruction is based on indirect addressing, which means that the Address Pointer in the UPDI needs to be written prior to bus matrix access. Automatic pointer post-increment operation is supported and is useful when the LD instruction is used with REPEAT. It is also possible to do an LD of the UPDI Pointer register. The maximum supported size for address and data load is 16 bits.

Figure 29-9. LD Instruction Operation

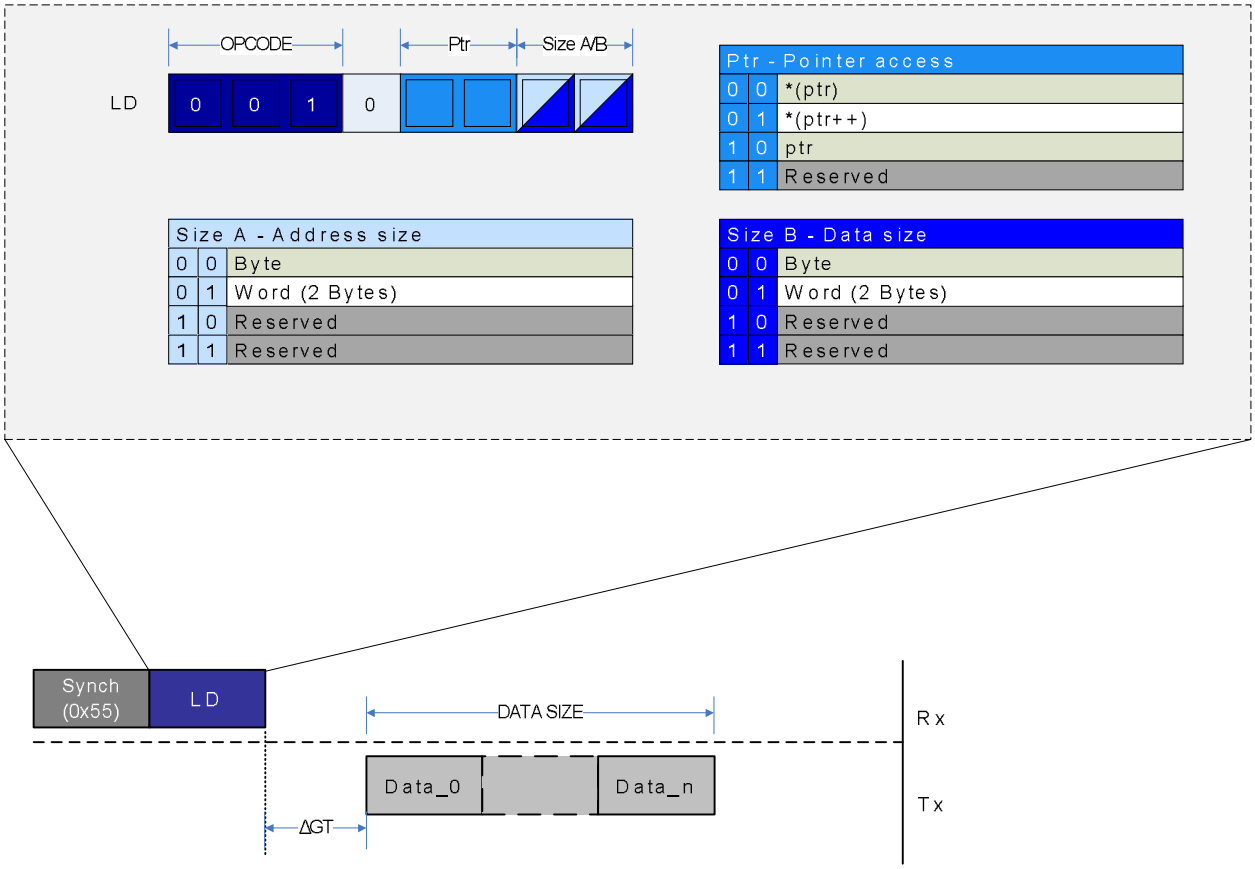

The figure above shows an example of a typical LD sequence, where data is received after the Guard Time period. Loading data from the UPDI Pointer register follows the same transmission protocol.

29.3.3.4 ST - Store Data from Data Space Using Indirect Addressing

The ST instruction is used to store data that is shifted serially into the PHY layer to the bus matrix address space. The ST instruction is based on indirect addressing, which means that the Address Pointer in the UPDI needs to be written prior to bus matrix access. Automatic pointer post-increment operation is supported, and is useful when the ST instruction is used with REPEAT. ST is also used to store the UPDI Address Pointer into the Pointer register. The maximum supported size for storing address and data is 16 bits.

Figure 29-10. ST Instruction Operation

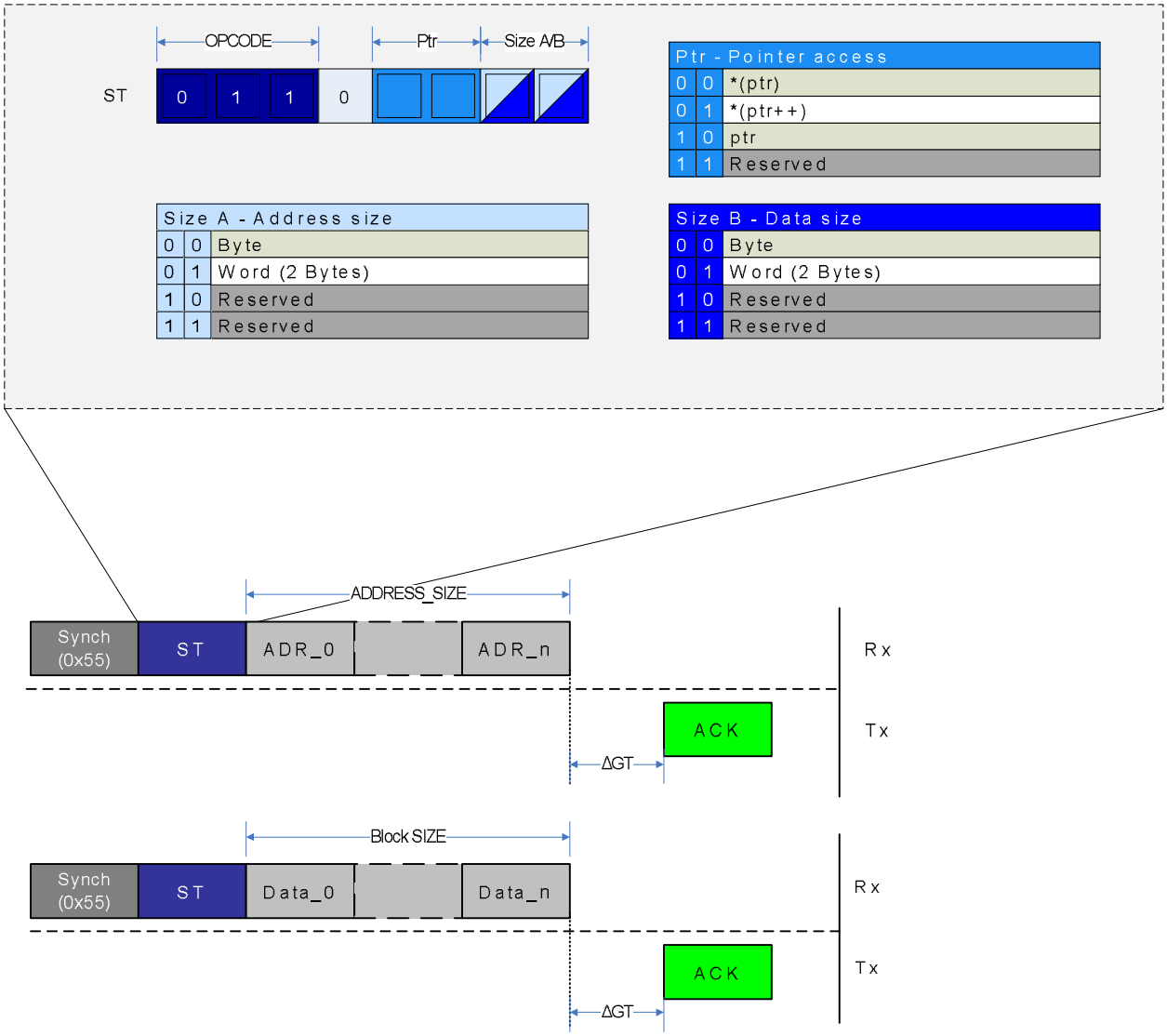

The figure above gives an example of ST to the UPDI Pointer register and store of regular data. In both cases, an Acknowledge (ACK) is sent back by the UPDI if the store was successful and a SYNCH character is sent before each instruction. To write the UPDI Pointer register, the following procedure should be followed.

- Set the PTR field in the ST instruction to the signature 0x2
- Set the address size field Size A to the desired address size
- After issuing the ST instruction, send Size A bytes of address data
- Wait for the ACK character, which signifies a successful write to the Address register

After the Address register is written, sending data is done in a similar fashion.

- Set the PTR field in the ST instruction to the signature 0x0 to write to the address specified by the UPDI Pointer register. If the PTR field is set to 0x1, the UPDI pointer is automatically updated to the next address according to the data size Size B field of the instruction after the write is executed
- Set the Size B field in the instruction to the desired data size
- After sending the ST instruction, send Size B bytes of address data
- Wait for the ACK character which signifies a successful write to the bus matrix

When used with the REPEAT, it is recommended to set up the address register with the start address for the block to be written and use the Pointer Post Increment register to automatically increase the address for each repeat cycle. When using REPEAT, the data frame of Size B data bytes can be sent after each received ACK.

29.3.3.5 LCDS - Load Data from Control and Status Register Space

The LCDS instruction is used to load data from the UPDI and ASI CS-space. LCDS is based on direct addressing, where the address is part of the instruction opcode. The total address space for LCDS is 16 bytes and can only access the internal UPDI register space. This instruction only supports byte access and the data size is not configurable.

Figure 29-11. LCDS Instruction Operation

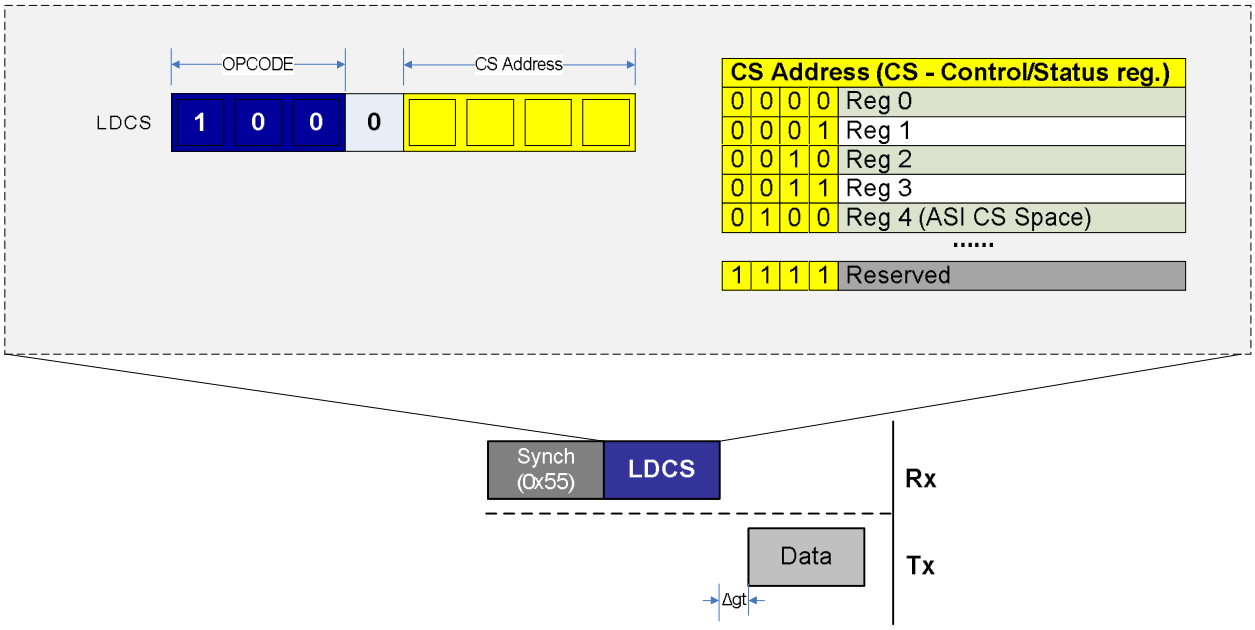

The figure above shows a typical example of LCDS data transmission. A data byte from the LCDS space is transmitted from the UPDI after the Guard Time is completed.

29.3.3.6 STCS (Store Data to Control and Status Register Space)

The STCS instruction is used to store data to the UPDI and ASI CS-space. STCS is based on direct addressing, where the address is part of the instruction opcode. The total address space for STCS is 16 bytes, and can only access the internal UPDI register space. This instruction only supports byte access, and data size is not configurable.

Figure 29-12. STCS Instruction Operation

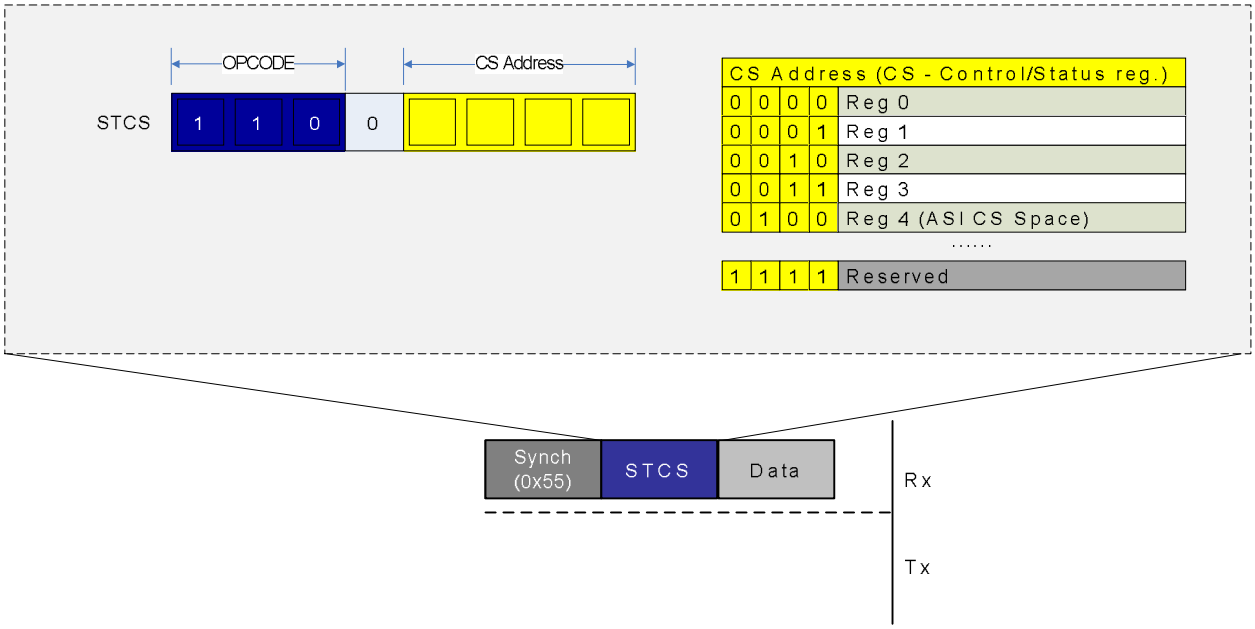

Figure 29-12 shows the data frame transmitted after the SYNCH and instruction frames. There is no response generated from the `STCS` instruction, as is the case for ST and STS.

29.3.3.7 `REPEAT` - Set Instruction Repeat Counter

The `REPEAT` instruction is used to store the repeat count value into the UPDI Repeat Counter register. When instructions are used with `REPEAT`, protocol overhead for SYNCH and Instruction Frame can be omitted on all instructions except the first instruction after the `REPEAT` is issued. `REPEAT` is most useful for memory instructions (`LD`, `ST`, `LDS`, `STS`), but all instructions can be repeated, except the `REPEAT` instruction itself.

The DATA_SIZE opcode field refers to the size of the repeat value. Only byte size (up to 255 repeats) is supported. The instruction that is loaded directly after the `REPEAT` instruction will be repeated `RPT_0` times. The instruction will be issued a total of `RPT_0 + 1` times. An ongoing repeat can only be aborted by sending a `BREAK` character.

Figure 29-13. REPEAT Instruction Operation

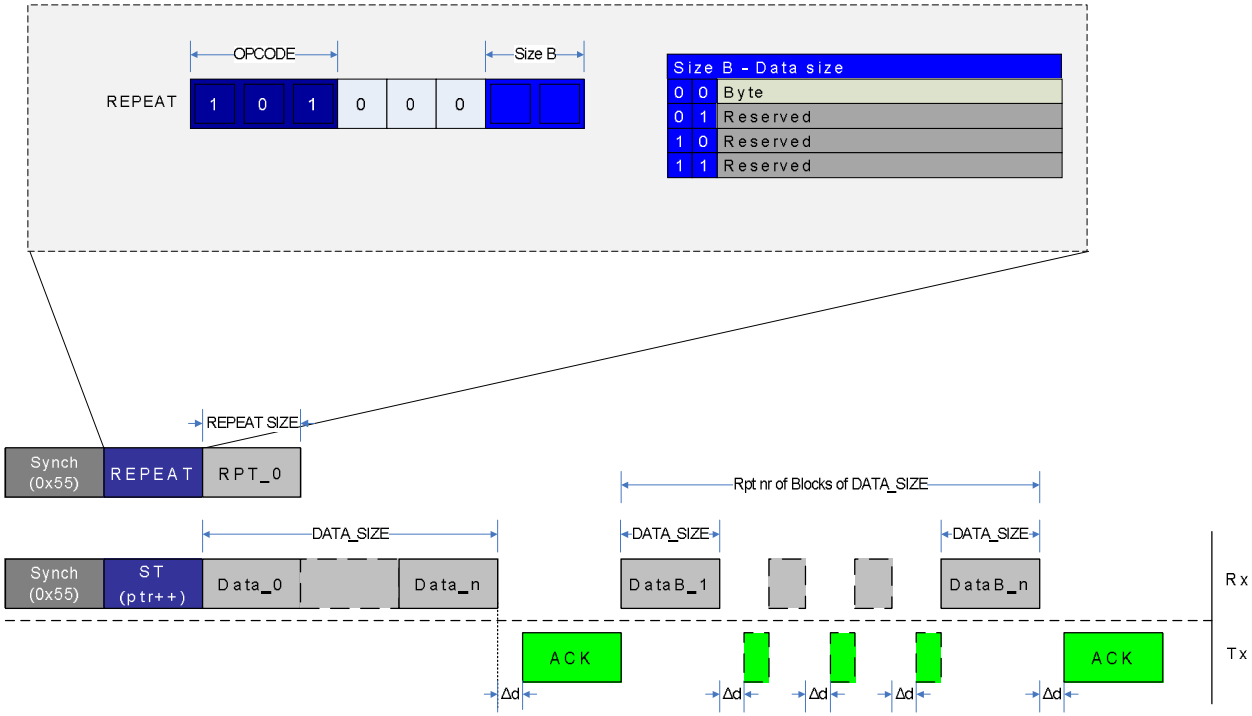

The figure above gives an example of repeat operation with an `ST` instruction using pointer post-increment operation. After the `REPEAT` instruction is sent with `RPT_0 =` ***n***, the first `ST` instruction is issued with SYNCH and Instruction frame, while the next ***n*** `ST` instructions are executed by only sending in data bytes according to the `ST` operand `DATA_SIZE`, and maintaining the Acknowledge (ACK) handshake protocol.

If using indirect addressing instructions `(LD/ST)` it is recommended to always use the pointer post increment option when combined with `REPEAT`. Otherwise, the same address will be accessed in all repeated access operations. For direct addressing instructions (`LDS`/`STS`), the address must always be transmitted as specified in the instruction protocol, before data can be received (`LDS`) or sent (`STS`).

29.3.3.8 KEY - Set Activation KEY

The `KEY` instruction is used for communicating KEY bytes to the UPDI, opening up for executing protected features on the device. See Table 29-5 for an overview of functions that are activated by KEYs. For the `KEY` instruction, only 64-bit KEY size is supported. If the System Information Block (SIB) field of the `KEY` instruction is set, the `KEY` instruction returns the SIB instead of expecting incoming KEY bytes. Maximum supported size for SIB is 128 bits.

Figure 29-14. KEY Instruction Operation

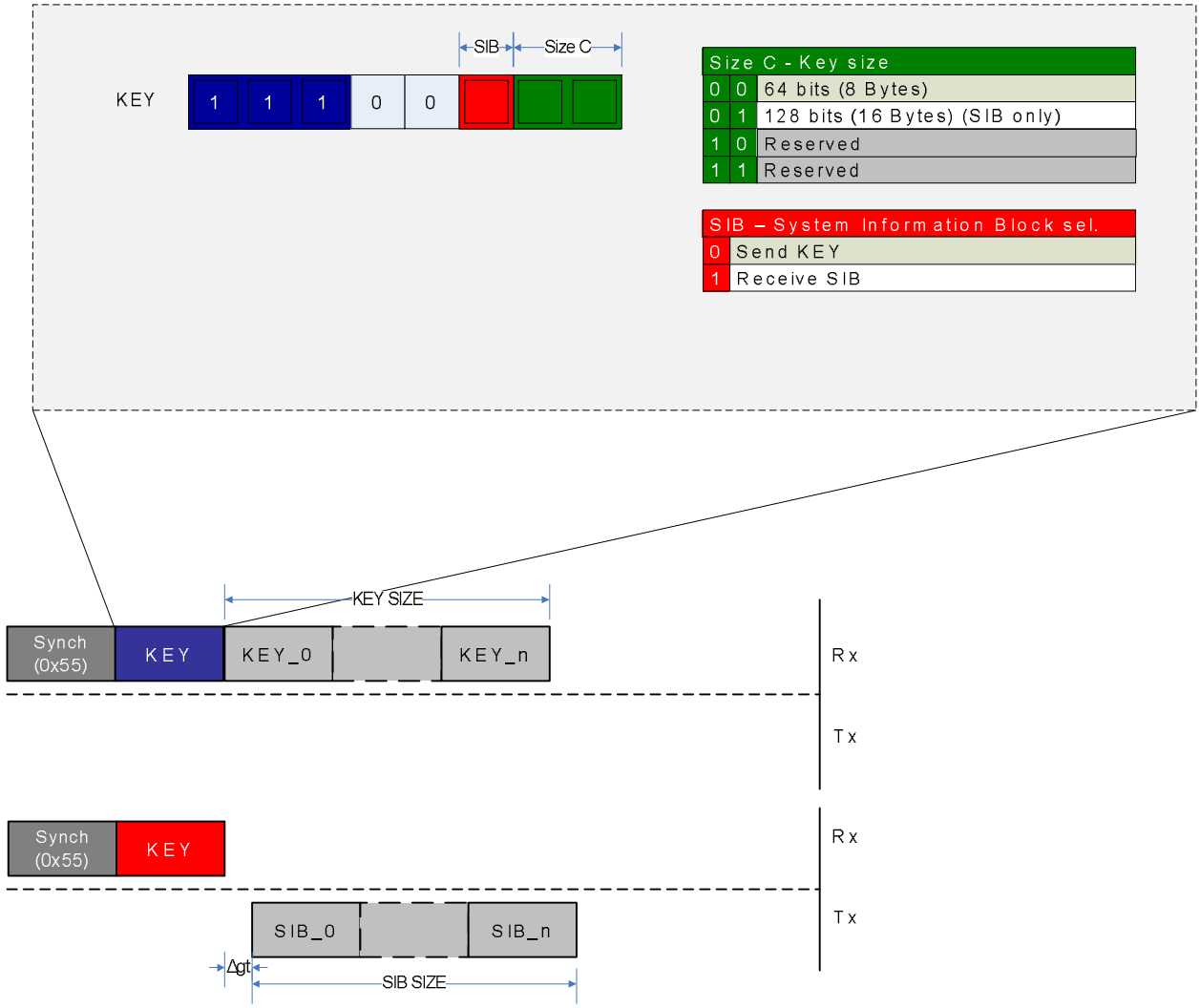

The figure above shows the transmission of a KEY and the reception of a SIB. In both cases, the `SIZE_C` field in the opcode determines the number of frames being sent or received. There is no response after sending a `KEY` to the UPDI. When requesting the SIB, data will be transmitted from the UPDI according to the current Guard Time setting.

29.3.4 System Clock Measurement with UPDI

It is possible to use the UPDI to get an accurate measurement of the system clock frequency, by using the UPDI event connected to TCB with Input Capture capabilities. A recommended setup flow for this feature is given by the following steps:

- Set up TCBn.CTRLB with setting CNTMODE=0x3, Input Capture Frequency Measurement mode.
- Write CAPTEI=1 in TCBn.EVCTRL to enable Event Interrupt. Keep EDGE = 0 in TCBn.EVCTRL.
- Configure the Event System as described in 29.3.8 Events.
- For the SYNCH character used to generate the UPDI events, it is recommended to use a slow baud rate in the range of 10 kbps - 50 kbps to get a more accurate measurement on the value captured by the timer between each UPDI event. One particular thing is that if the capture is set up to trigger an interrupt, the first captured value should be ignored. The second captured value based on the input event should be used for the measurement. See the figure below for an example using 10 kbps UPDI SYNCH character pulses, giving a capture window of 200 µs for the timer.
- It is possible to read out the captured value directly after the SYNCH character by reading the TCBn.CCMP register or the value can be written to memory by the CPU once the capture is done.

Figure 29-15. UPDI System Clock Measurement Events

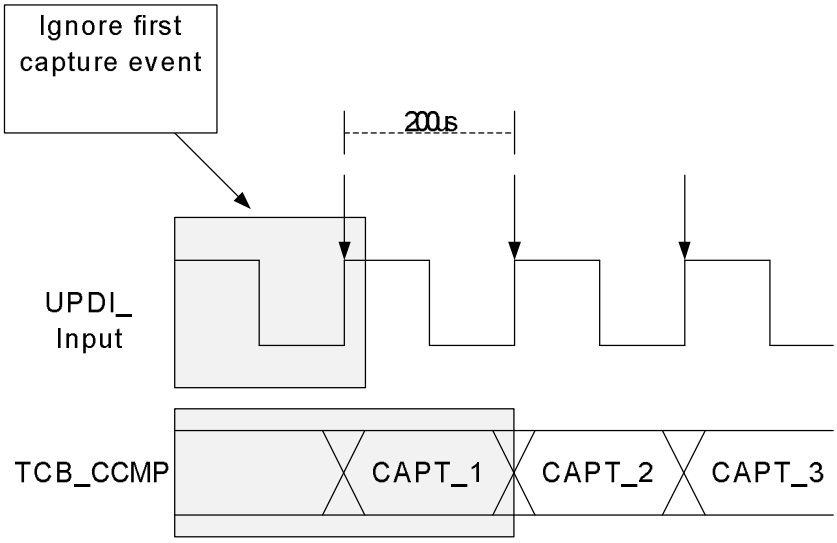

29.3.5 Interbyte Delay

When loading data with the UPDI, or reading out the System Information Block, the output data will normally come out with two IDLE bits between each transmitted byte for a multibyte transfer. Depending on the application on the receiver side, data might be coming out too fast when there are no extra IDLE bits between each byte. By enabling the IBDLY feature in UPDI.CTRLB, two extra Stop bits will be inserted between each byte to relax the sampling time for the debugger. Interbyte delay works in the same way as a guard time, by inserting extra IDLE bits, but only a fixed number of IDLE bits and only for multibyte transfers. The first transmitted byte after a direction change will be subject to the regular Guard Time before it is transmitted, and the interbyte delay is not added to this time.

Figure 29-16. Interbyte Delay Example with LD and RPT

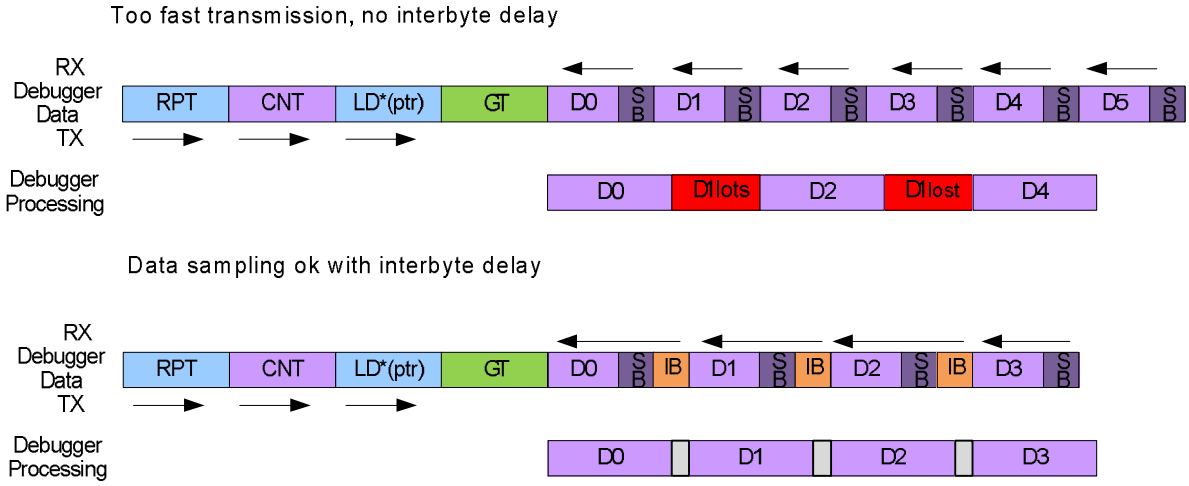

In Figure 29-16, GT denotes the Guard Time insertion, SB is for Stop Bit and IB is the inserted interbyte delay. The rest of the frames are data and instructions.

29.3.6 System Information Block

The System Information Block (SIB) can be read out at any time by setting the SIB bit in the `KEY` instruction from 29.3.3.8 KEY - Set Activation KEY. The SIB provides a compact form of providing information for the debugger, which is vital in identifying and setting up the proper communication channel with the part. The output of the SIB should be interpreted as ASCII symbols. The KEY size field should be set to 16 bytes when reading out the complete SIB, and an 8-byte size can be used to read out only the Family_ID. See Figure 29-17 for SIB format description, and which data is available at different readout sizes.

Figure 29-17. System Information Block Format

16	8	[Byte][Bits]	Field Name
		[6:0] [55:0]	Family_ID
		[7][7:0]	Reserved
		[10:8][23:0]	NVM_VERSION
		[13:11][23:0]	OCD_VERSION
		[14][7:0]	RESERVED
		[15][7:0]	DBG_OSC_FREQ

29.3.7 Enabling of KEY Protected Interfaces

Access to some internal interfaces and features are protected by the UPDI KEY mechanism. To activate a KEY, the correct KEY data must be transmitted by using the `KEY` instruction as described in KEY instruction. Table 29-5 describes the available KEYs, and the condition required when doing the operation with the KEY active. There is no requirement when shifting in the KEY, but you would, for instance, normally run a Chip Erase before enabling the NVMPROG KEY to unlock the device for debugging. But if the NVMPROGKEY is shifted in first, it will not be reset by shifting in the Chip Erase KEY afterwards.

Table 29-5. KEY Activation Overview

KEY Name	Description	Requirements for Operation	Reset
Chip Erase	Start NVM Chip erase. Clear Lockbits	None	UPDI Disable/UPDI Reset
NVMPROG	Activate NVM Programming	Lockbits Cleared. ASI_SYS_STATUS.NVMPROG set.	Programming Done/UPDI Reset
USERROW-Write	Program User Row on Locked part	Lockbits Set. ASI_SYS_STATUS.UROWPROG set.	Write to KEY status bit/ UPDI Reset

Table 29-6 gives an overview of the available KEY signatures that must be shifted in to activate the interfaces.

Table 29-6. KEY Activation Signatures

KEY Name	KEY Signature (LSB Written First)	Size
Chip Erase	0x4E564D4572617365	64 bits
NVMPROG	0x4E564D50726F6720	64 bits
USERROW-Write	0x4E564D5573267465	64 bits

29.3.7.1 Chip Erase

The following steps should be followed to issue a Chip Erase.

1. Enter the CHIPERASE KEY by using the `KEY` instruction. See Table 29-6 for the CHIPERASE signature.
2. **Optional:** Read the Chip Erase bit in the AS Key Status register (CHIPERASE in UPDI.ASI_KEY_STATUS) to see that the KEY is successfully activated.
3. Write the Reset signature into the UPDI.ASI_RESET_REQ register. This will issue a System Reset.
4. Write 0x00 to the ASI Reset Request register (UPDI.ASI_RESET_REQ) to clear the System Reset.
5. Read the Lock Status bit in the ASI System Status register (LOCKSTATUS in UPDI.ASI_SYS_STATUS).
6. Chip Erase is done when LOCKSTATUS == 0 in UPDI.ASI_SYS_STATUS. If LOCKSTATUS == 1, go to point 5 again.

After a successful Chip Erase, the Lockbits will be cleared, and the UPDI will have full access to the system. Until Lockbits are cleared, the UPDI cannot access the system bus, and only CS-space operations can be performed.

⚠ CAUTION During Chip Erase, the BOD is forced ON (ACTIVE=0x1 in BOD.CTRLA) and uses the BOD Level from the BOD Configuration fuse (LVL in BOD.CTRLB = LVL in FUSE.BODCFG). If the supply voltage V_{DD} is below that threshold level, the device is unserviceable until V_{DD} is increased adequately.

29.3.7.2 NVM Programming

If the device is unlocked, it is possible to write directly to the NVM Controller using the UPDI. This will lead to unpredictable code execution if the CPU is active during the NVM programming. To avoid this, the following NVM Programming sequence should be executed.

1. Follow the Chip erase procedure as described in Chip Erase. If the part is already unlocked, this point can be skipped.
2. Enter the NVMPROG KEY by using the `KEY` instruction. See Table 29-6 for the NVMPROG signature.
3. **Optional:** Read the NVMPROG field in the KEY_STATUS register to see that the KEY has been activated.
4. Write the Reset signature into the ASI_RESET_REQ register. This will issue a System Reset.
5. Write 0x00 to the Reset signature in the ASI_RESET_REQ register to clear the System Reset.
6. Read NVMPROG in ASI_SYS_STATUS.
7. NVM Programming can start when NVMPROG == 1 in the ASI_SYS_STATUS register. If NVMPROG == 0, go to point 6 again.
8. Write data to NVM through the UPDI.
9. Write the Reset signature into the ASI_RESET_REQ register. This will issue a System Reset.
10. Write 0x00 to the Reset signature in ASI_RESET_REQ register to clear the System Reset.
11. Programming is complete.

29.3.7.3 User Row Programming

The User Row Programming feature allows the user to program new values to the User Row (USERROW) on a locked device. To program with this functionality enabled, the following sequence should be followed.

1. Enter the USERROW-Write KEY located in Table 29-6 by using the `KEY` instruction. See Table 29-6 for the UROWWRITE signature.
2. **Optional:** Read the UROWWRITE bit field in UPDI.ASI_KEY_STATUS to see that the KEY has been activated.
3. Write the Reset signature into the UPDI.ASI_RESET_REQ register. This will issue a System Reset.
4. Write 0x00 to the Reset signature in UPDI.ASI_RESET_REQ register to clear the System Reset.
5. Read UROWPROG bit in UPDI.ASI_SYS_STATUS.
6. User Row Programming can start when UROWPROG == 1. If UROWPROG == 0, go to point 5 again.
7. The writable area has a size of one EEPROM page (64 bytes), and it is only possible to write User Row data to the first 64 byte addresses of the RAM. Addressing outside this memory range will result in a non-executed write. The data will map 1:1 with the User Row space when the data is copied into the User Row upon completion of the Programming sequence.
8. When all User Row data has been written to the RAM, write the UROWWRITEFINAL bit in UPDI.ASI_SYS_CTRLA.
9. Read the UROWPROG bit in UPDI.ASI_SYS_STATUS.
10. The User Row Programming is completed when UROWPROG == 0. If UROWPROG == 1, go to point 9 again.
11. Write the UROWWRITE bit in UPDI.ASI_KEY_STATUS.
12. Write the Reset signature into the UPDI.ASI_RESET_REQ register. This will issue a System Reset.
13. Write 0x00 to the Reset signature in UPDI.ASI_RESET_REQ register to clear the System Reset.
14. User Row Programming is complete.

It is not possible to read back data from the SRAM in this mode. Only writes to the first 64 bytes of the SRAM is allowed.

29.3.8 Events

The UPDI is connected to the Event System (EVSYS) as described in the Event System (EVSYS) section.

The UPDI can generate the following output events:

- SYNCH Character Positive Edge Event

This event is set on the UPDI clock for each detected positive edge in the SYNCH character, and it is not possible to disable this event from the UPDI. The recommended application for this event is system clock frequency measurement through the UPDI. Section 29.3.4 System Clock Measurement with UPDI provides the details on how to set up the system for this operation.

29.3.9 Sleep Mode Operation

The UPDI physical layer runs independently of all Sleep modes and the UPDI is always accessible for a connected debugger independent of the device Sleep mode. If the system enters a Sleep mode that turns the CPU clock OFF, the UPDI will not be able to access the system bus and read memories and peripherals. The UPDI physical layer clock is unaffected by the Sleep mode settings, as long as the UPDI is enabled. By reading the INSLEEP bit in UPDI.ASI_SYS_STATUS it is possible to monitor if the system domain is in Sleep mode. The INSLEEP bit is set if the system is in IDLE Sleep mode or deeper.

It is possible to prevent the system clock from stopping when going into Sleep mode, by writing the CLKREQ bit in UPDI.ASI_SYS_CTRL to ‘1’. If this bit is set, the system Sleep mode state is emulated, and it is possible for the UPDI to access the system bus and read the peripheral registers even in the deepest Sleep modes.

CLKREQ in UPDI.ASI_SYS_CTRL is by default ‘1’, which means that the default operation is keeping the system clock on during Sleep modes.

29.4 Register Summary - UPDI

Offset	Name	Bit Pos.								
0x00	STATUSA	7:0	UPDIREV[3:0]							
0x01	STATUSB	7:0						PESIG[2:0]		
0x02	CTRLA	7:0	IBDLY		PARD	DTD	RSD	GTVAL[2:0]		
0x03	CTRLB	7:0				NACKDIS	CCDETDIS	UPDIDIS		
0x04 ... 0x06	Reserved									
0x07	ASI_KEY_STATUS	7:0			UROWWRITE	NVMPROG	CHIPERASE			
0x08	ASI_RESET_REQ	7:0	RSTREQ[7:0]							
0x09	ASI_CTRLA	7:0							UPDICLKSEL[1:0]	
0x0A	ASI_SYS_CTRLA	7:0							UROWWRITE_FINAL	CLKREQ
0x0B	ASI_SYS_STATUS	7:0			RSTSYS	INSLEEP	NVMPROG	UROWPROG		LOCKSTATUS
0x0C	ASI_CRC_STATUS	7:0						CRC_STATUS[2:0]		

29.5 Register Description

These registers are readable only through the UPDI with special instructions and are NOT readable through the CPU.

Registers at offset addresses 0x0-0x3 are the UPDI Physical configuration registers.

Registers at offset addresses 0x4-0xC are the ASI level registers.

29.5.1 Status A

Name: STATUSA
Offset: 0x00
Reset: 0x10
Property: -

Bit	7	6	5	4	3	2	1	0
	UPDIREV[3:0]							
Access	R	R	R	R				
Reset	0	0	0	1				

Bits 7:4 – UPDIREV[3:0] UPDI Revision
These bits are read-only and contain the revision of the current UPDI implementation.

29.5.2 Status B

Name: STATUSB
Offset: 0x01
Reset: 0x00
Property: -

Bit	7	6	5	4	3	2	1	0
						PESIG[2:0]		
Access						R	R	R
Reset						0	0	0

Bits 2:0 – PESIG[2:0] UPDI Error Signature
These bits describe the UPDI Error Signature and are set when an internal UPDI error condition occurs. The PESIG field is cleared on a read from the debugger.

Table 29-7. Valid Error Signatures

PESIG[2:0]	Error Type	Error Description
0x0	No error	No error detected (Default)
0x1	Parity error	Wrong sampling of the parity bit
0x2	Frame error	Wrong sampling of frame Stop bits
0x3	Access Layer Time-out Error	UPDI can get no data or response from the Access layer. Examples of error cases are system domain in Sleep or system domain Reset.
0x4	Clock Recovery error	Wrong sampling of frame Start bit
0x5	-	Reserved
0x6	Reserved	Reserved
0x7	Contention error	Signalize Driving Contention on the UPDI RXD/TXD line

29.5.3 Control A

Name: CTRLA
Offset: 0x02
Reset: 0x00
Property: -

Bit	7	6	5	4	3	2	1	0
	IBDLY		PARD	DTD	RSD	GTVAL[2:0]		
Access	R/W		R/W	R/W	R/W	R/W	R/W	R/W
Reset	0		0	0	0	0	0	0

Bit 7 – IBDLY Inter-Byte Delay Enable
Writing a '1' to this bit enables a fixed inter-byte delay between each data byte transmitted from the UPDI when doing multi-byte LD(S). The fixed length is two IDLE characters. Before the first transmitted byte, the regular GT delay used for direction change will be used.

Bit 5 – PARD Parity Disable
Writing this bit to '1' will disable parity detection in the UPDI by ignoring the Parity bit. This feature is recommended only during testing.

Bit 4 – DTD Disable Time-out Detection
Setting this bit disables the time-out detection on the PHY layer, which requests a response from the ACC layer within a specified time (65536 UPDI clock cycles).

Bit 3 – RSD Response Signature Disable
Writing a '1' to this bit will disable any response signatures generated by the UPDI. This is to reduce the protocol overhead to a minimum when writing large blocks of data to the NVM space. Disabling the Response Signature should be used with caution, and only when the delay experienced by the UPDI when accessing the system bus is predictable, otherwise loss of data may occur.

Bits 2:0 – GTVAL[2:0] Guard Time Value
This bit field selects the Guard Time Value that will be used by the UPDI when the transmission mode switches from RX to TX.

Value	Description
0x0	UPDI Guard Time: 128 cycles (default)
0x1	UPDI Guard Time: 64 cycles
0x2	UPDI Guard Time: 32 cycles
0x3	UPDI Guard Time: 16 cycles
0x4	UPDI Guard Time: 8 cycles
0x5	UPDI Guard Time: 4 cycles
0x6	UPDI Guard Time: 2 cycles
0x7	GT off (no extra Idle bits inserted)

29.5.4 Control B

Name: CTRLB
Offset: 0x03
Reset: 0x00
Property: -

Bit	7	6	5	4	3	2	1	0
				NACKDIS	CCDETDIS	UPDIDIS		
Access				R	R	R		
Reset				0	0	0		

Bit 4 – NACKDIS Disable NACK Response
Writing this bit to ‘1’ disables the NACK signature sent by the UPDI if a System Reset is issued during an ongoing LD(S) and ST(S) operation.

Bit 3 – CCDETDIS Collision and Contention Detection Disable
If this bit is written to ‘1’, contention detection is disabled.

Bit 2 – UPDIDIS UPDI Disable
Writing a ‘1’ to this bit disables the UPDI PHY interface. The clock request from the UPDI is lowered, and the UPDI is reset. All UPDI PHY configurations and KEYs will be reset when the UPDI is disabled.

29.5.5 ASI Key Status

Name: ASI_KEY_STATUS
Offset: 0x07
Reset: 0x00
Property: -

Bit	7	6	5	4	3	2	1	0
			UROWWRITE	NVMPROG	CHIPERASE			
Access			R/W	R	R			
Reset			0	0	0			

Bit 5 – UROWWRITE User Row Write Key Status
This bit is set to ‘1’ if the UROWWRITE KEY is active. Otherwise, this bit reads as ‘0’.

Bit 4 – NVMPROG NVM Programming
This bit is set to ‘1’ if the NVMPROG KEY is active. This bit is automatically reset after the programming sequence is done. Otherwise, this bit reads as ‘0’.

Bit 3 – CHIPERASE Chip Erase
This bit is set to ‘1’ if the CHIPERASE KEY is active. This bit will automatically be reset when the Chip Erase sequence is completed. Otherwise, this bit reads as ‘0’.

29.5.6 ASI Reset Request

Name: ASI_RESET_REQ
Offset: 0x08
Reset: 0x00
Property: -

Bit	7	6	5	4	3	2	1	0
	RSTREQ[7:0]							
Access	R/W	R/W	R/W	R/W	R/W	R/W	R/W	R/W
Reset	0	0	0	0	0	0	0	0

Bits 7:0 – RSTREQ[7:0] Reset Request
A Reset is signalized to the System when writing the Reset signature 0x59h to this address.
Writing any other signature to this register will clear the Reset.
When reading this register, reading bit RSTREQ[0] will tell if the UPDI is holding an active Reset on the system. If this bit is ‘1’, the UPDI has an active Reset request to the system. All other bits will read as ‘0’.
The UPDI will not be reset when issuing a System Reset from this register.

29.5.7 ASI Control A

Name: ASI_CTRLA
Offset: 0x09
Reset: 0x02
Property: -

Bit	7	6	5	4	3	2	1	0
							UPDICLKSEL[1:0]	
Access							R/W	R/W
Reset							1	1

Bits 1:0 – UPDICLKSEL[1:0] UPDI Clock Select
Writing these bits select the UPDI clock output frequency. Default setting after Reset and enable is 4 MHz. Any other clock output selection is only recommended when the BOD is at the highest level. For all other BOD settings, the default 4 MHz selection is recommended.

Value	Description
0x0	Reserved
0x1	16 MHz UPDI clock
0x2	8 MHz UPDI clock
0x3	4 MHz UPDI clock (Default Setting)

29.5.8 ASI System Control A

Name: ASI_SYS_CTRLA
Offset: 0x0A
Reset: 0x00
Property: -

Bit	7	6	5	4	3	2	1	0
							UROWWRITE_FINAL	CLKREQ
Access	R	R	R	R	R	R	R/W	R/W
Reset	0	0	0	0	0	0	0	0

Bit 1 – UROWWRITE_FINAL User Row Programming Done
This bit should be written through the UPDI when the user row data has been written to the RAM. Writing this bit will start the process of programming the user row data to the Flash.
If this bit is written before the User Row code is written to RAM by the UPDI, the CPU will progress without the written data.
This bit is only writable if the User Row-write KEY is successfully decoded.

Bit 0 – CLKREQ Request System Clock
If this bit is written to ‘1’, the ASI is requesting the system clock, independent of system Sleep modes. This makes it possible for the UPDI to access the ACC layer, also if the system is in Sleep mode.
Writing a ‘0’ to this bit will lower the clock request.
This bit will be reset when the UPDI is disabled.
This bit is set by default when the UPDI is enabled.

29.5.9 ASI System Status

Name: ASI_SYS_STATUS
Offset: 0x0B
Reset: 0x01
Property: -

Bit	7	6	5	4	3	2	1	0
			RSTSYS	INSLEEP	NVMPROG	UROWPROG		LOCKSTATUS
Access			R	R	R	R		R
Reset			0	0	0	0		1

Bit 5 – RSTSYS System Reset Active
If this bit is set, there is an active Reset on the system domain. If this bit is cleared, the system is not in Reset.
This bit is cleared on read.
A Reset held from the ASI_RESET_REQ register will also affect this bit.

Bit 4 – INSLEEP System Domain in Sleep
If this bit is set, the system domain is in IDLE or deeper Sleep mode. If this bit is cleared, the system is not in Sleep.

Bit 3 – NVMPROG Start NVM Programming
If this bit is set, NVM Programming can start from the UPDI.
When the UPDI is done, it must reset the system through the UPDI Reset register.

Bit 2 – UROWPROG Start User Row Programming
If this bit is set, User Row Programming can start from the UPDI.
When the UPDI is done, it must write the UROWWRITE_FINAL bit in ASI_SYS_CTRLA.

Bit 0 – LOCKSTATUS NVM Lock Status
If this bit is set, the device is locked. If a Chip Erase is done, and the Lockbits are cleared, this bit will read as ‘0’.

29.5.10 ASI CRC Status

Name: ASI_CRC_STATUS
Offset: 0x0C
Reset: 0x00
Property: -

Bit	7	6	5	4	3	2	1	0
						CRC_STATUS[2:0]		
Access						R	R	R
Reset						0	0	0

Bits 2:0 – CRC_STATUS[2:0] CRC Execution Status
These bits signalize the status of the CRC conversion. The bits are one-hot encoded.

Value	Description
0x0	Not enabled
0x1	CRC enabled, busy
0x2	CRC enabled, done with OK signature
0x4	CRC enabled, done with FAILED signature
Other	Reserved

30. Instruction Set Summary

Table 30-1. Status Register (SREG)

Terminology	Meaning
SREG	Status register
C	Carry flag in status register
Z	Zero flag in status register
N	Negative flag in status register
V	Two's complement overflow indicator
S	N⊕V, for signed tests
H	Half Carry flag in status register
T	Transfer bit used by BLD and BST instructions
I	Global interrupt enable/disable flag

Table 30-2. Registers and Operands

Operand	Meaning
Rd	Destination (and source) register in the register file
Rr	Source register in the register file
R	Result after instruction is executed
K	Constant literal or byte data (8-bit)
k	Constant address data for program counter
b	Bit in the register file (3-bit)
s	Bit in the status register (3-bit)
X,Y,Z	Indirect address register (X=R27:R26, Y=R29:R28 and Z=R31:R30)
P	I/O port address
q	Displacement for direct addressing (6-bit)
UU	Unsigned × Unsigned operands
SS	Signed × Signed operands
SU	Signed × Unsigned operands

Table 30-3. Stack

Terminology	Meaning
STACK	Stack for return address and pushed registers
SP	Stack Pointer to STACK

Table 30-4. Memory Space Identifiers

Terminology	Meaning
DS(X)	X-pointer points to address in Data Space
DS(Y)	Y-pointer points to address in Data Space
DS(Z)	Z-pointer points to address in Data Space
DS(k)	Constant k points to address in Data Space
PS(Z)	Z-pointer points to address in Program Space
I/O(A)	A is an address in I/O Space

Table 30-5. Operator

Operator	Meaning
×	Arithmetic multiplication
+	Arithmetic addition
-	Arithmetic subtraction
∧	Logical AND
∨	Logical OR
⊕	Logical XOR
>>	Shift right
<<	Shift left
==	Comparison
Rd(n)	Bit n in register Rd

Table 30-6. Arithmetic and Logic Instructions

Mnemonic	Operands	Description		Op		Flags	#Clocks
ADD	Rd, Rr	Add without Carry	Rd	←	Rd + Rr	Z,C,N,V,S,H	1
ADC	Rd, Rr	Add with Carry	Rd	←	Rd + Rr + C	Z,C,N,V,S,H	1
ADIW	Rd, K	Add Immediate to Word	Rd + 1:Rd	←	Rd + 1:Rd + K	Z,C,N,V,S	2
SUB	Rd, Rr	Subtract without Carry	Rd	←	Rd - Rr	Z,C,N,V,S,H	1
SUBI	Rd, K	Subtract Immediate	Rd	←	Rd - K	Z,C,N,V,S,H	1
SBC	Rd, Rr	Subtract with Carry	Rd	←	Rd - Rr - C	Z,C,N,V,S,H	1
SBCI	Rd, K	Subtract Immediate with Carry	Rd	←	Rd - K - C	Z,C,N,V,S,H	1
SBIW	Rd, K	Subtract Immediate from Word	Rd + 1:Rd	←	Rd + 1:Rd - K	Z,C,N,V,S	2
AND	Rd, Rr	Logical AND	Rd	←	Rd ∧ Rr	Z,N,V,S	1
ANDI	Rd, K	Logical AND with Immediate	Rd	←	Rd ∧ K	Z,N,V,S	1
OR	Rd, Rr	Logical OR	Rd	←	Rd ∨ Rr	Z,N,V,S	1
ORI	Rd, K	Logical OR with Immediate	Rd	←	Rd ∨ K	Z,N,V,S	1
EOR	Rd, Rr	Exclusive OR	Rd	←	Rd ⊕ Rr	Z,N,V,S	1
COM	Rd	One's Complement	Rd	←	0xFF - Rd	Z,C,N,V,S	1
NEG	Rd	Two's Complement	Rd	←	0x00 - Rd	Z,C,N,V,S,H	1

.....continued

Mnemonic	Operands	Description		Op		Flags	#Clocks
SBR	Rd,K	Set Bit(s) in Register	Rd	←	Rd ∨ K	Z,N,V,S	1
CBR	Rd,K	Clear Bit(s) in Register	Rd	←	Rd ∧ (0xFF - K)	Z,N,V,S	1
INC	Rd	Increment	Rd	←	Rd + 1	Z,N,V,S	1
DEC	Rd	Decrement	Rd	←	Rd - 1	Z,N,V,S	1
TST	Rd	Test for Zero or Minus	Rd	←	Rd ∧ Rd	Z,N,V,S	1
CLR	Rd	Clear Register	Rd	←	Rd ⊕ Rd	Z,N,V,S	1
SER	Rd	Set Register	Rd	←	0xFF	None	1
MUL	Rd,Rr	Multiply Unsigned	R1:R0	←	Rd × Rr (UU)	Z,C	2
MULS	Rd,Rr	Multiply Signed	R1:R0	←	Rd × Rr (SS)	Z,C	2
MULSU	Rd,Rr	Multiply Signed with Unsigned	R1:R0	←	Rd × Rr (SU)	Z,C	2
FMUL	Rd,Rr	Fractional Multiply Unsigned	R1:R0	←	Rd × Rr<<1 (UU)	Z,C	2
FMULS	Rd,Rr	Fractional Multiply Signed	R1:R0	←	Rd × Rr<<1 (SS)	Z,C	2
FMULSU	Rd,Rr	Fractional Multiply Signed with Unsigned	R1:R0	←	Rd × Rr<<1 (SU)	Z,C	2

Table 30-7. Branch Instructions

Mnemonic	Operands	Description		Op		Flags	#Clocks
RJMP	k	Relative Jump	PC	←	PC + k + 1	None	2
IJMP		Indirect Jump to (Z)	PC	←	Z	None	2
JMP	k	Jump	PC	←	k	None	3
RCALL	k	Relative Call Subroutine	PC	←	PC + k + 1	None	2/3
ICALL		Indirect Call to (Z)	PC	←	Z	None	2/3
CALL	k	Call Subroutine	PC	←	k	None	3/4
RET		Subroutine Return	PC	←	STACK	None	4/5
RETI		Interrupt Return	PC	←	STACK	I	4/5
CPSE	Rd,Rr	Compare, skip if Equal	if (Rd == Rr) PC	←	PC + 2 or 3	None	1/2/3
CP	Rd,Rr	Compare	Rd - Rr			Z,C,N,V,S,H	1
CPC	Rd,Rr	Compare with Carry	Rd - Rr - C			Z,C,N,V,S,H	1
CPI	Rd,K	Compare with Immediate	Rd - K			Z,C,N,V,S,H	1
SBRC	Rr, b	Skip if Bit in Register Cleared	if (Rr(b) == 0) PC	←	PC + 2 or 3	None	1/2/3
SBRS	Rr, b	Skip if Bit in Register Set	if (Rr(b) == 1) PC	←	PC + 2 or 3	None	1/2/3
SBIC	A, b	Skip if Bit in I/O Register Cleared	if (I/O(A,b) == 0) PC	←	PC + 2 or 3	None	1/2/3
SBIS	A, b	Skip if Bit in I/O Register Set	If (I/O(A,b) == 1) PC	←	PC + 2 or 3	None	1/2/3
BRBS	s, k	Branch if Status Flag Set	if (SREG(s) == 1) then PC	←	PC + k + 1	None	1/2
BRBC	s, k	Branch if Status Flag Cleared	if (SREG(s) == 0) then PC	←	PC + k + 1	None	1/2
BREQ	k	Branch if Equal	if (Z == 1) then PC	←	PC + k + 1	None	1/2
BRNE	k	Branch if Not Equal	if (Z == 0) then PC	←	PC + k + 1	None	1/2
BRCS	k	Branch if Carry Set	if (C == 1) then PC	←	PC + k + 1	None	1/2
BRCC	k	Branch if Carry Cleared	if (C == 0) then PC	←	PC + k + 1	None	1/2
BRSH	k	Branch if Same or Higher	if (C == 0) then PC	←	PC + k + 1	None	1/2

.....continued

Mnemonic	Operands	Description		Op		Flags	#Clocks
BRLO	k	Branch if Lower	if (C == 1) then PC	←	PC + k + 1	None	1/2
BRMI	k	Branch if Minus	if (N == 1) then PC	←	PC + k + 1	None	1/2
BRPL	k	Branch if Plus	if (N == 0) then PC	←	PC + k + 1	None	1/2
BRGE	k	Branch if Greater or Equal, Signed	if (N ⊕ V == 0) then PC	←	PC + k + 1	None	1/2
BRLT	k	Branch if Less Than, Signed	if (N ⊕ V == 1) then PC	←	PC + k + 1	None	1/2
BRHS	k	Branch if Half Carry Flag Set	if (H == 1) then PC	←	PC + k + 1	None	1/2
BRHC	k	Branch if Half Carry Flag Cleared	if (H == 0) then PC	←	PC + k + 1	None	1/2
BRTS	k	Branch if T Flag Set	if (T == 1) then PC	←	PC + k + 1	None	1/2
BRTC	k	Branch if T Flag Cleared	if (T == 0) then PC	←	PC + k + 1	None	1/2
BRVS	k	Branch if Overflow Flag is Set	if (V == 1) then PC	←	PC + k + 1	None	1/2
BRVC	k	Branch if Overflow Flag is Cleared	if (V == 0) then PC	←	PC + k + 1	None	1/2
BRIE	k	Branch if Interrupt Enabled	if (I == 1) then PC	←	PC + k + 1	None	1/2
BRID	k	Branch if Interrupt Disabled	if (I == 0) then PC	←	PC + k + 1	None	1/2

Table 30-8. Data Transfer Instructions

Mnemonic	Operands	Description		Op		Flags	#Clocks
MOV	Rd, Rr	Copy Register	Rd	←	Rr	None	1
MOVW	Rd, Rr	Copy Register Pair	Rd+1:Rd	←	Rr+1:Rr	None	1
LDI	Rd, K	Load Immediate	Rd	←	K	None	1
LDS	Rd, k	Load Direct from data space	Rd	←	DS(k)	None	3(1)
LD	Rd, X	Load Indirect	Rd	←	DS(X)	None	2(1)
LD	Rd, X+	Load Indirect and Post-Increment	Rd X	← ←	DS(X) X + 1	None	2(1)
LD	Rd, -X	Load Indirect and Pre-Decrement	X Rd	← ←	X - 1 DS(X)	None	2(1)
LD	Rd, Y	Load Indirect	Rd	←	DS(Y)	None	2(1)
LD	Rd, Y+	Load Indirect and Post-Increment	Rd Y	← ←	DS(Y) Y + 1	None	2(1)
LD	Rd, -Y	Load Indirect and Pre-Decrement	Y Rd	← ←	Y - 1 DS(Y)	None	2(1)
LDD	Rd, Y+q	Load Indirect with Displacement	Rd	←	DS(Y + q)	None	2(1)
LD	Rd, Z	Load Indirect	Rd	←	DS(Z)	None	2(1)
LD	Rd, Z+	Load Indirect and Post-Increment	Rd Z	← ←	DS(Z) Z+1	None	2(1)
LD	Rd, -Z	Load Indirect and Pre-Decrement	Z Rd	← ←	Z - 1 DS(Z)	None	2(1)
LDD	Rd, Z+q	Load Indirect with Displacement	Rd	←	DS(Z + q)	None	2(1)
STS	k, Rr	Store Direct to Data Space	DS(k)	←	Rd	None	2(1)(2)
ST	X, Rr	Store Indirect	DS(X)	←	Rr	None	1(1)(2)

.....continued

Mnemonic	Operands	Description		Op		Flags	#Clocks
ST	X+, Rr	Store Indirect and Post-Increment	DS(X) X	← ←	Rr X + 1	None	1(1)(2)
ST	-X, Rr	Store Indirect and Pre-Decrement	X DS(X)	← ←	X - 1 Rr	None	1(1)(2)
ST	Y, Rr	Store Indirect	DS(Y)	←	Rr	None	1(1)(2)
ST	Y+, Rr	Store Indirect and Post-Increment	DS(Y) Y	← ←	Rr Y + 1	None	1(1)(2)
ST	-Y, Rr	Store Indirect and Pre-Decrement	Y DS(Y)	← ←	Y - 1 Rr	None	1(1)(2)
STD	Y+q, Rr	Store Indirect with Displacement	DS(Y + q)	←	Rr	None	1(1)(2)
ST	Z, Rr	Store Indirect	DS(Z)	←	Rr	None	1(1)(2)
ST	Z+, Rr	Store Indirect and Post-Increment	DS(Z) Z	← ←	Rr Z + 1	None	1(1)(2)
ST	-Z, Rr	Store Indirect and Pre-Decrement	Z DS(Z)	← ←	Z - 1 Rr	None	1(1)(2)
STD	Z+q,Rr	Store Indirect with Displacement	DS(Z + q)	←	Rr	None	1(1)(2)
LPM		Load Program Memory	R0	←	PS(Z)	None	3
LPM	Rd, Z	Load Program Memory	Rd	←	PS(Z)	None	3
LPM	Rd, Z+	Load Program Memory and Post-Increment	Rd Z	← ←	PS(Z) Z + 1	None	3
IN	Rd, A	In From I/O Location	Rd	←	I/O(A)	None	1
OUT	A, Rr	Out To I/O Location	I/O(A)	←	Rr	None	1
PUSH	Rr	Push Register on Stack	STACK	←	Rr	None	1
POP	Rd	Pop Register from Stack	Rd	←	STACK	None	2

Table 30-9. Bit and Bit-Test Instructions

Mnemonic	Operands	Description		Op		Flags	#Clocks
LSL	Rd	Logical Shift Left	Rd(n+1) Rd(0) C	← ← ←	Rd(n) , n=0..6 0 Rd(7)	Z,C,N,V,H	1
LSR	Rd	Logical Shift Right	Rd(n) Rd(7) C	← ← ←	Rd(n+1) , n=0..6 0 Rd(0)	Z,C,N,V	1
ROL	Rd	Rotate Left Through Carry	Rd(0) Rd(n+1) C	← ← ←	C Rd(n), n=0..6 Rd(7)	Z,C,N,V,H	1
ROR	Rd	Rotate Right Through Carry	Rd(7) Rd(n) C	← ← ←	C Rd(n+1), n=0..6 Rd(0)	Z,C,N,V	1

.....continued

Mnemonic	Operands	Description		Op		Flags	#Clocks
ASR	Rd	Arithmetic Shift Right	Rd(n) C Rd(7)	← ← ←	Rd(n+1), n=0..6 Rd(0) Rd(7)	Z,C,N,V	1
SWAP	Rd	Swap Nibbles	Rd(3..0)	↔	Rd(7..4)	None	1
SBI	A, b	Set Bit in I/O Register	I/O(A, b)	←	1	None	1
CBI	A, b	Clear Bit in I/O Register	I/O(A, b)	←	0	None	1
BST	Rr, b	Bit Store from Register to T	T	←	Rr(b)	T	1
BLD	Rd, b	Bit load from T to Register	Rd(b)	←	T	None	1
BSET	s	Flag Set	SREG(s)	←	1	SREG(s)	1
BCLR	s	Flag Clear	SREG(s)	←	0	SREG(s)	1
SEC		Set Carry	C	←	1	C	1
CLC		Clear Carry	C	←	0	C	1
SEN		Set Negative Flag	N	←	1	N	1
CLN		Clear Negative Flag	N	←	0	N	1
SEZ		Set Zero Flag	Z	←	1	Z	1
CLZ		Clear Zero Flag	Z	←	0	Z	1
SEI		Global Interrupt Enable	I	←	1	I	1
CLI		Global Interrupt Disable	I	←	0	I	1
SES		Set Signed Test Flag	S	←	1	S	1
CLS		Clear Signed Test Flag	S	←	0	S	1
SEV		Set Two's Complement Overflow	V	←	1	V	1
CLV		Clear Two's Complement Overflow	V	←	0	V	1
SET		Set T in SREG	T	←	1	T	1
CLT		Clear T in SREG	T	←	0	T	1
SEH		Set Half Carry Flag in SREG	H	←	1	H	1
CLH		Clear Half Carry Flag in SREG	H	←	0	H	1

Table 30-10. MCU Control Instructions

Mnemonic	Operands	Description	Operation	Flags	#Clocks
BREAK		Break	(See also in Debug interface description)	None	1
NOP		No Operation		None	1
SLEEP		Sleep	(see also power management and sleep description)	None	1
WDR		Watchdog Reset	(see also Watchdog Controller description)	None	1

Note:

1. Cycle time for data memory accesses assume internal RAM access and are not valid for accesses to the NVM. A minimum of one extra cycle must be added when reading Flash and EEPROM.
2. One extra cycle must be added when accessing lower (64 bytes of) I/O space.

31. Data Sheet Revision History

Note: The data sheet revision is independent of the die revision and the device variant (last letter of the ordering number).

31.1 Rev.C - 08/2019

Chapter	Changes
Entire Document	• Editorial updates
Features	• Added industrial temperature range -40°C to +85°C
2. megaAVR 0-series Overview	• Updated megaAVR 0-series Overview figure • Added ordering code for industrial temperature range in megaAVR Device Designations figure
5.8 Fuses (FUSE)	• Added default fuse values

31.2 Rev.B - 03/2019

Chapter	Changes
Entire Document	• Added support for ATmega808/809/1608/1609 • Added support for 40-pin PDIP • Editorial updates • Renamed document type from *manual* to *family data sheet*
Features	• Updated data retention information • Extended speed grade information

5. Memories	• Added oscillator calibration (OSCCALnnxn) registers
	• SIGROW
	  – Updated description to clarify that information is stored in fuse bytes, not in volatile registers.
	• FUSE
	  – Clarifying that reserved bits within a fuse byte must be written to '0'
	  – Removed non-recommended BOD levels in BODCFG
	  – Updating access for LOCKBIT from *R/W* to *R*
	  – Removed misleading reset values
	• Updated *Memory Section Access from CPU and UPDI on Locked Device* section

7. AVR CPU	• Removed redundant information
9. CLKCTRL - Clock Controller	• Added OSC20MCALIBA register

.....continued

Chapter	Changes
13. EVSYS - Event System	• STROBE/STROBEA renamed to STROBEx • Event Generators – Added Window Compare Match for ADC – Updated TCB event generator description • Event Users – Updated table • STROBEn – Updated access from *R/W* to *W* • Updated generator names in CHANNEL • Updated table in USER
14. PORTMUX - Port Multiplexer	• Added explicit information for EVSYSROUTEA register
16. BOD - Brown-out Detect	• Removed non-recommended BOD levels from CTRLB
19. TCA - 16-bit Timer/Counter Type A	• Single Slope PWM Generation – Revised figure and description • Dual Slope PWM – Revised figure and description • Events – Revised description and added table
20. TCB - 16-bit Timer/Counter Type B	• Updated block diagram for clock sources • Mode figures legend use improved • Input Capture Pulse-Width Measurement mode figure corrected • 8-bit PWM mode pseudo-code replaced by figure • Added output configuration table
21. RTC - Real-Time Counter	• Clarified that first PIT interrupt and RTC count tick will be unknown • Added *Debug Operation* section • Updated reset values for PER and CMP register • Updated access for PITINTFLAGS register
22. USART - Universal Synchronous and Asynchronous Receiver and Transmitter	• Structural changes • General content improvements
23. SPI - Serial Peripheral Interface	• Added INTCTRL register
24. TWI - Two-Wire Interface	• Removed misleading internal information from *Overview* section • Cleaned up Dual Control information • Clarified APIEN description in SCTRLA

.....continued

Chapter	Changes
26. CCL – Configurable Custom Logic	• Register summary updated: Number n of LUTs and according registers (LUTnCTRLA, LUTnCTRLB, LUTnCTRLC, TRUTHn) • Update of terms and descriptions: – Block Diagram section – CCL Input Selection MUX section – Sequencer Logic – Events – Filter – Association LUT-Sequencer
28. ADC - Analog-to-Digital Converter	• Updated ADC Timing Diagrams – Single Conversion – Free-Running Conversion • Added information in the *Events* section
29. UPDI - Unified Program and Debug Interface	• General content improvements • Updated Access for UROWWRITE in ASI_KEY_STATUS register

31.3 Rev. A - 02/2018

Initial release.

The Microchip Website

Microchip provides online support via our website at http://www.microchip.com/. This website is used to make files and information easily available to customers. Some of the content available includes:

- **Product Support** – Data sheets and errata, application notes and sample programs, design resources, user's guides and hardware support documents, latest software releases and archived software
- **General Technical Support** – Frequently Asked Questions (FAQs), technical support requests, online discussion groups, Microchip design partner program member listing
- **Business of Microchip** – Product selector and ordering guides, latest Microchip press releases, listing of seminars and events, listings of Microchip sales offices, distributors and factory representatives

Product Change Notification Service

Microchip's product change notification service helps keep customers current on Microchip products. Subscribers will receive email notification whenever there are changes, updates, revisions or errata related to a specified product family or development tool of interest.

To register, go to http://www.microchip.com/pcn and follow the registration instructions.

Customer Support

Users of Microchip products can receive assistance through several channels:

- Distributor or Representative
- Local Sales Office
- Embedded Solutions Engineer (ESE)
- Technical Support

Customers should contact their distributor, representative or ESE for support. Local sales offices are also available to help customers. A listing of sales offices and locations is included in this document.

Technical support is available through the website at: http://www.microchip.com/support

Product Identification System

To order or obtain information, e.g., on pricing or delivery, refer to the factory or the listed sales office.

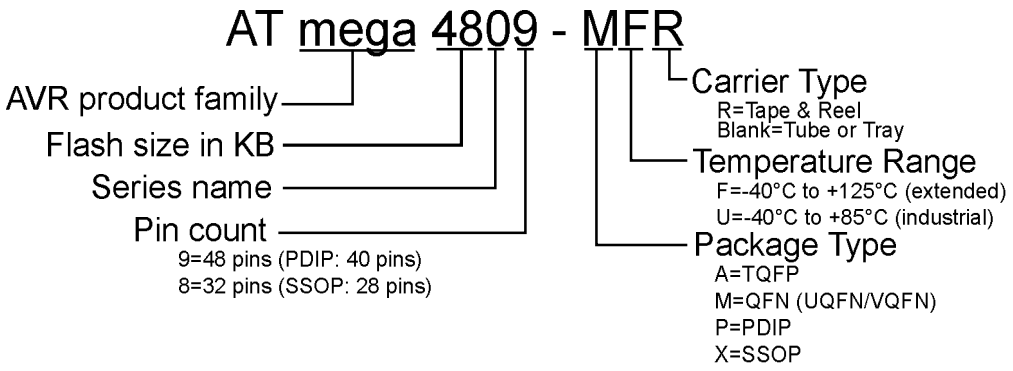

Note: Tape and Reel identifier only appears in the catalog part number description. This identifier is used for ordering purposes. Check with your Microchip Sales Office for package availability with the Tape and Reel option.

Microchip Devices Code Protection Feature

Note the following details of the code protection feature on Microchip devices:

- Microchip products meet the specification contained in their particular Microchip Data Sheet.
- Microchip believes that its family of products is one of the most secure families of its kind on the market today, when used in the intended manner and under normal conditions.
- There are dishonest and possibly illegal methods used to breach the code protection feature. All of these methods, to our knowledge, require using the Microchip products in a manner outside the operating specifications contained in Microchip's Data Sheets. Most likely, the person doing so is engaged in theft of intellectual property.
- Microchip is willing to work with the customer who is concerned about the integrity of their code.
- Neither Microchip nor any other semiconductor manufacturer can guarantee the security of their code. Code protection does not mean that we are guaranteeing the product as "unbreakable."

Code protection is constantly evolving. We at Microchip are committed to continuously improving the code protection features of our products. Attempts to break Microchip's code protection feature may be a violation of the Digital Millennium Copyright Act. If such acts allow unauthorized access to your software or other copyrighted work, you may have a right to sue for relief under that Act.

Legal Notice

Information contained in this publication regarding device applications and the like is provided only for your convenience and may be superseded by updates. It is your responsibility to ensure that your application meets with your specifications. MICROCHIP MAKES NO REPRESENTATIONS OR WARRANTIES OF ANY KIND WHETHER EXPRESS OR IMPLIED, WRITTEN OR ORAL, STATUTORY OR OTHERWISE, RELATED TO THE INFORMATION, INCLUDING BUT NOT LIMITED TO ITS CONDITION, QUALITY, PERFORMANCE, MERCHANTABILITY OR FITNESS FOR PURPOSE. Microchip disclaims all liability arising from this information and its use. Use of Microchip devices in life support and/or safety applications is entirely at the buyer's risk, and the buyer agrees to defend, indemnify and hold harmless Microchip from any and all damages, claims, suits, or expenses resulting from such use. No licenses are conveyed, implicitly or otherwise, under any Microchip intellectual property rights unless otherwise stated.

Trademarks

The Microchip name and logo, the Microchip logo, Adaptec, AnyRate, AVR, AVR logo, AVR Freaks, BesTime, BitCloud, chipKIT, chipKIT logo, CryptoMemory, CryptoRF, dsPIC, FlashFlex, flexPWR, HELDO, IGLOO, JukeBlox,

KeeLoq, Kleer, LANCheck, LinkMD, maXStylus, maXTouch, MediaLB, megaAVR, Microsemi, Microsemi logo, MOST, MOST logo, MPLAB, OptoLyzer, PackeTime, PIC, picoPower, PICSTART, PIC32 logo, PolarFire, Prochip Designer, QTouch, SAM-BA, SenGenuity, SpyNIC, SST, SST Logo, SuperFlash, Symmetricom, SyncServer, Tachyon, TempTrackr, TimeSource, tinyAVR, UNI/O, Vectron, and XMEGA are registered trademarks of Microchip Technology Incorporated in the U.S.A. and other countries.

APT, ClockWorks, The Embedded Control Solutions Company, EtherSynch, FlashTec, Hyper Speed Control, HyperLight Load, IntelliMOS, Libero, motorBench, mTouch, Powermite 3, Precision Edge, ProASIC, ProASIC Plus, ProASIC Plus logo, Quiet-Wire, SmartFusion, SyncWorld, Temux, TimeCesium, TimeHub, TimePictra, TimeProvider, Vite, WinPath, and ZL are registered trademarks of Microchip Technology Incorporated in the U.S.A.

Adjacent Key Suppression, AKS, Analog-for-the-Digital Age, Any Capacitor, AnyIn, AnyOut, BlueSky, BodyCom, CodeGuard, CryptoAuthentication, CryptoAutomotive, CryptoCompanion, CryptoController, dsPICDEM, dsPICDEM.net, Dynamic Average Matching, DAM, ECAN, EtherGREEN, In-Circuit Serial Programming, ICSP, INICnet, Inter-Chip Connectivity, JitterBlocker, KleerNet, KleerNet logo, memBrain, Mindi, MiWi, MPASM, MPF, MPLAB Certified logo, MPLIB, MPLINK, MultiTRAK, NetDetach, Omniscient Code Generation, PICDEM, PICDEM.net, PICkit, PICtail, PowerSmart, PureSilicon, QMatrix, REAL ICE, Ripple Blocker, SAM-ICE, Serial Quad I/O, SMART-I.S., SQI, SuperSwitcher, SuperSwitcher II, Total Endurance, TSHARC, USBCheck, VariSense, ViewSpan, WiperLock, Wireless DNA, and ZENA are trademarks of Microchip Technology Incorporated in the U.S.A. and other countries.

SQTP is a service mark of Microchip Technology Incorporated in the U.S.A.

The Adaptec logo, Frequency on Demand, Silicon Storage Technology, and Symmcom are registered trademarks of Microchip Technology Inc. in other countries.

GestIC is a registered trademark of Microchip Technology Germany II GmbH & Co. KG, a subsidiary of Microchip Technology Inc., in other countries.

All other trademarks mentioned herein are property of their respective companies.

© 2019, Microchip Technology Incorporated, Printed in the U.S.A., All Rights Reserved.

ISBN: 978-1-5224-4891-4

Quality Management System

For information regarding Microchip's Quality Management Systems, please visit http://www.microchip.com/quality.

Worldwide Sales and Service

AMERICAS	ASIA/PACIFIC	ASIA/PACIFIC	EUROPE
Corporate Office	**Australia - Sydney**	**India - Bangalore**	**Austria - Wels**
2355 West Chandler Blvd.	Tel: 61-2-9868-6733	Tel: 91-80-3090-4444	Tel: 43-7242-2244-39
Chandler, AZ 85224-6199	**China - Beijing**	**India - New Delhi**	Fax: 43-7242-2244-393
Tel: 480-792-7200	Tel: 86-10-8569-7000	Tel: 91-11-4160-8631	**Denmark - Copenhagen**
Fax: 480-792-7277	**China - Chengdu**	**India - Pune**	Tel: 45-4450-2828
Technical Support:	Tel: 86-28-8665-5511	Tel: 91-20-4121-0141	Fax: 45-4485-2829
http://www.microchip.com/support	**China - Chongqing**	**Japan - Osaka**	**Finland - Espoo**
Web Address:	Tel: 86-23-8980-9588	Tel: 81-6-6152-7160	Tel: 358-9-4520-820
http://www.microchip.com	**China - Dongguan**	**Japan - Tokyo**	**France - Paris**
Atlanta	Tel: 86-769-8702-9880	Tel: 81-3-6880- 3770	Tel: 33-1-69-53-63-20
Duluth, GA	**China - Guangzhou**	**Korea - Daegu**	Fax: 33-1-69-30-90-79
Tel: 678-957-9614	Tel: 86-20-8755-8029	Tel: 82-53-744-4301	**Germany - Garching**
Fax: 678-957-1455	**China - Hangzhou**	**Korea - Seoul**	Tel: 49-8931-9700
Austin, TX	Tel: 86-571-8792-8115	Tel: 82-2-554-7200	**Germany - Haan**
Tel: 512-257-3370	**China - Hong Kong SAR**	**Malaysia - Kuala Lumpur**	Tel: 49-2129-3766400
Boston	Tel: 852-2943-5100	Tel: 60-3-7651-7906	**Germany - Heilbronn**
Westborough, MA	**China - Nanjing**	**Malaysia - Penang**	Tel: 49-7131-72400
Tel: 774-760-0087	Tel: 86-25-8473-2460	Tel: 60-4-227-8870	**Germany - Karlsruhe**
Fax: 774-760-0088	**China - Qingdao**	**Philippines - Manila**	Tel: 49-721-625370
Chicago	Tel: 86-532-8502-7355	Tel: 63-2-634-9065	**Germany - Munich**
Itasca, IL	**China - Shanghai**	**Singapore**	Tel: 49-89-627-144-0
Tel: 630-285-0071	Tel: 86-21-3326-8000	Tel: 65-6334-8870	Fax: 49-89-627-144-44
Fax: 630-285-0075	**China - Shenyang**	**Taiwan - Hsin Chu**	**Germany - Rosenheim**
Dallas	Tel: 86-24-2334-2829	Tel: 886-3-577-8366	Tel: 49-8031-354-560
Addison, TX	**China - Shenzhen**	**Taiwan - Kaohsiung**	**Israel - Ra'anana**
Tel: 972-818-7423	Tel: 86-755-8864-2200	Tel: 886-7-213-7830	Tel: 972-9-744-7705
Fax: 972-818-2924	**China - Suzhou**	**Taiwan - Taipei**	**Italy - Milan**
Detroit	Tel: 86-186-6233-1526	Tel: 886-2-2508-8600	Tel: 39-0331-742611
Novi, MI	**China - Wuhan**	**Thailand - Bangkok**	Fax: 39-0331-466781
Tel: 248-848-4000	Tel: 86-27-5980-5300	Tel: 66-2-694-1351	**Italy - Padova**
Houston, TX	**China - Xian**	**Vietnam - Ho Chi Minh**	Tel: 39-049-7625286
Tel: 281-894-5983	Tel: 86-29-8833-7252	Tel: 84-28-5448-2100	**Netherlands - Drunen**
Indianapolis	**China - Xiamen**		Tel: 31-416-690399
Noblesville, IN	Tel: 86-592-2388138		Fax: 31-416-690340
Tel: 317-773-8323	**China - Zhuhai**		**Norway - Trondheim**
Fax: 317-773-5453	Tel: 86-756-3210040		Tel: 47-72884388
Tel: 317-536-2380			**Poland - Warsaw**
Los Angeles			Tel: 48-22-3325737
Mission Viejo, CA			**Romania - Bucharest**
Tel: 949-462-9523			Tel: 40-21-407-87-50
Fax: 949-462-9608			**Spain - Madrid**
Tel: 951-273-7800			Tel: 34-91-708-08-90
Raleigh, NC			Fax: 34-91-708-08-91
Tel: 919-844-7510			**Sweden - Gothenberg**
New York, NY			Tel: 46-31-704-60-40
Tel: 631-435-6000			**Sweden - Stockholm**
San Jose, CA			Tel: 46-8-5090-4654
Tel: 408-735-9110			**UK - Wokingham**
Tel: 408-436-4270			Tel: 44-118-921-5800
Canada - Toronto			Fax: 44-118-921-5820
Tel: 905-695-1980			
Fax: 905-695-2078			