SAMSUNG

PCN21-A01a

Samsung Electronics Co.,LTD
San #24 Nongseo-Dong,
Giheung-Gu, Yongin-City, Gyeonggi-Do,
Korea 446-711

Name : JinSun Jung
Department : Marketing
Phone : +82-31-8021-3182
E-mail : js98.jeong@samsung.com

Product Change Notification (PCN)

Issued Date: January 5, 2021

This letter is to inform you that Samsung Electronics plans to execute the changes (see the separate excel file for specific part numbers).

1. Products
   - Product Model: Samsung LED modules of standard linear/finger
   - Part Number: Please refer to separated spread sheet named as
     "[PCN List] Samsung Standard Linear Modules_CNT change (Jan.2021)"

2. Items changed

CNT Change				
Description	AS-IS		TO-BE	
	Maker	P/N	Maker	P/N
TERMINAL-BLOCK;POKE, 1P	Molex	1041880110	Wago	2060-451/998-404
TERMINAL-BLOCK;POKE, 2P	Molex	1041880210	Wago	2060-452/998-404

Samsung will take care of certification updates for all versions.

3. Starting Date of manufacturing : March ~ April, 2021

※ During this period, two different types of connectors will be used and packed in the same box.

Issued by Marketing at LED business of Samsung Electronics

- The End –

Data sheet | Item number: 2060-451/998-404

SMD PCB terminal block; push-button; 0.75 mm²; Pin spacing 4 mm; 1-pole; Push-in CAGE CLAMP®; in tape-and-reel packaging; 0,75 mm²; white

www.wago.com/2060-451/998-404

RoHS Compliant ✓ BOMcheck.net Color:

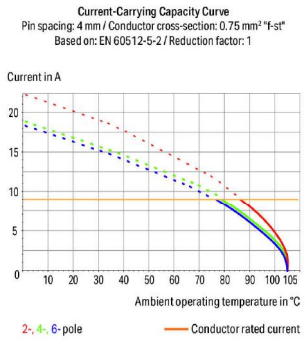

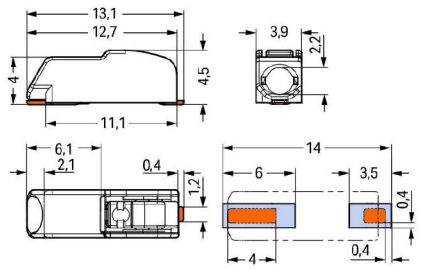

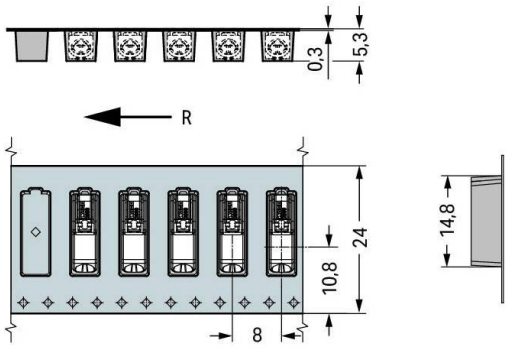

R = Feed direction

Subject to changes. Please also observe the further product documentation!

WAGO Corporation
Germantown, WI 53022
Phone: 1-800-DIN-RAIL (346-7245) | Fax: (262) 255-6222
Email: info.us@wago.com | Web: www.wago.us

Do you have any questions about our products?
We are always happy to take your call at {0}.

Item description

- SMD PCB terminal blocks with Push-in CAGE CLAMP® connection technology and push-buttons
- Push-in termination of solid and ferruled conductors
- Convenient termination/removal of fine-stranded conductors via push-buttons
- Just 4.5 mm tall
- Available in tape-and-reel packaging for automated assembly

Note:

Application notes:

Suitable for lead-free, reflow-soldering profiles per DIN EN 61760-1 and IEC 60068-2-58 up to max. 260°C peak temperature. Due to application-specific variables (component configuration and orientation, type of soldering machine, solder paste), trial runs are recommended to ensure product and process compatibility under actual manufacturing conditions.

Note:

Depending on reflow soldering temperatures and times, color deviations may occur. These deviations will have no impact on functionality.

Recommendation:

Recommendation for stencil:

Material thickness: 150 µm; Pattern layout identical to solder pad layout

Subject to changes. Please also observe the further product documentation!

WAGO Corporation
Germantown, WI 53022
Phone: 1-800-DIN-RAIL (346-7245) | Fax: (262) 255-6222
Email: info.us@wago.com | Web: www.wago.us

Do you have any questions about our products?
We are always happy to take your call at {0}.

Data
Electrical data

Ratings per IEC/EN 60664-1

Ratings per	IEC/EN 60664-1
Rated voltage (III / 3)	63 V
Rated surge voltage (III/3)	2.5 kV
Rated voltage (III/2)	160 V
Rated surge voltage (III/2)	2.5 kV
Nominal voltage (II/2)	320 V
Rated surge voltage (II/2)	2.5 kV
Rated current	9 A
Legend (ratings)	(III / 2) ≙ Overvoltage category III / Pollution degree 2

Ratings per UL 1059

Approvals per	UL 1059

Ratings per UL 1977

Rated voltage UL 1977	600 V
Rated current UL 1977	9 A

Ratings per CSA

Approvals per	CSA

Connection data

Connection technology	Push-in CAGE CLAMP®
Actuation type	Push-button
Solid conductor	0.2 … 0.75 mm² / 24 … 18 AWG
Fine-stranded conductor	0.2 … 0.75 mm² / 24 … 18 AWG
Fine-stranded conductor; with insulated ferrule	0.25 … 0.34 mm²
Fine-stranded conductor; with uninsulated ferrule	0.25 … 0.34 mm²
Strip length	7 … 9 mm / 0.28 … 0.35 inch
Conductor connection direction to PCB	0°
Pole No.	1
Total number of connection points	1

Subject to changes. Please also observe the further product documentation!

WAGO Corporation
Germantown, WI 53022
Phone: 1-800-DIN-RAIL (346-7245) | Fax: (262) 255-6222
Email: info.us@wago.com | Web: www.wago.us

Do you have any questions about our products?
We are always happy to take your call at {0}.

Total number of potentials	1
Number of connection types	1
Number of levels	1

Physical data

Pin spacing	4 mm / 0.157 inch
Width	3.9 mm / 0.154 inch
Height	4.5 mm / 0.177 inch
Depth	13.1 mm / 0.516 inch
Reel diameter of tape-and-reel packaging	330 mm
Tape width	24 mm

PCB contact

PCB contact	SMD

Material Data

Color	white
Material group	I
Insulation material	Polyphthalamide (PPA GF)
Flammability class per UL94	V0
Clamping spring material	Chrome nickel spring steel (CrNi)
Contact material	Copper alloy
Contact plating	tin-plated
Weight	0.2 g

Environmental Requirements

Limit temperature range	-60 … +105 °C

Commercial data

Product Group	33 (Printed Circuit)
Packaging type	BOX
Country of origin	CH
GTIN	4055143541237
Customs tariff number	85369010000

Subject to changes. Please also observe the further product documentation!

WAGO Corporation
Germantown, WI 53022
Phone: 1-800-DIN-RAIL (346-7245) | Fax: (262) 255-6222
Email: info.us@wago.com | Web: www.wago.us

Do you have any questions about our products?
We are always happy to take your call at {0}.

Approvals / Certificates

Country specific Approvals

Logo	Approval	Additional Approval Text	Certificate name
	CCA DEKRA Certification B.V.	EN 60947	NTR NL-7724
	CCA DEKRA Certification B.V.	EN 60998	NTR NL 7725
	CCA DEKRA Certification B.V.	EN 60838	NTR NL 2168246
	KEMA/KEUR DEKRA Certification B.V.	EN 60838	2168246.01
	KEMA/KEUR DEKRA Certification B.V.	EN 60947	71-108183
	KEMA/KEUR DEKRA Certification B.V.	EN 60998	71-108181

UL-Approvals

Logo	Approval	Additional Approval Text	Certificate name
	cURus Underwriters Laboratories Inc.	UL 1977	20160727-E45171

Compatible products

ferrule

Item no.: 216-131

Subject to changes. Please also observe the further product documentation!

WAGO Corporation
Germantown, WI 53022
Phone: 1-800-DIN-RAIL (346-7245) | Fax: (262) 255-6222
Email: info.us@wago.com | Web: www.wago.us

Do you have any questions about our products?
We are always happy to take your call at {0}.

	Ferrule; Sleeve for 0.25 mm² / AWG 24; uninsulated; electro-tin plated; silver-colored	www.wago.com/216-131
	Item no.: 216-132 Ferrule; Sleeve for 0.34 mm² / AWG 24; uninsulated; electro-tin plated	www.wago.com/216-132
	Item no.: 216-301 Ferrule; Sleeve for 0.25 mm² / AWG 24; insulated; electro-tin plated; yellow	www.wago.com/216-301
	Item no.: 216-302 Ferrule; Sleeve for 0.34 mm² / 22 AWG; insulated; electro-tin plated; green	www.wago.com/216-302
tools		
	Item no.: 2060-189 Operating tool; made of insulating material; for 2060 Series; white	www.wago.com/2060-189
	Item no.: 206-860 Operating tool; for 2060 Series; multicoloured	www.wago.com/206-860
General accessories		
	Item no.: 2060-951/028-000 Board-to-Board Link; Pin spacing 4 mm; 1-pole; Length: 28 mm; white	www.wago.com/2060-951/028-000

Downloads

Documentation

Additional Information

Technical explanations	2019. 4. 3	pdf 3.6 MB	Download

CAD files

CAD data

2D/3D Models 2060-451/998-404	URL	Download

CAE data

ZUKEN Portal 2060-451/998-404	URL	Download

Installation Notes

Conductor termination

Subject to changes. Please also observe the further product documentation!

WAGO Corporation
Germantown, WI 53022
Phone: 1-800-DIN-RAIL (346-7245) | Fax: (262) 255-6222
Email: info.us@wago.com | Web: www.wago.us

Do you have any questions about our products?
We are always happy to take your call at {0}.

Insert solid conductors via push-in termination.

Conductor termination

Insert/remove fine-stranded conductors by lightly pressing on push-button (e.g., via 206-860 Operating Tool).

Terminal blocks can be arranged side-by-side without loss of poles.

Subject to changes. Please also observe the further product documentation!

WAGO Corporation
Germantown, WI 53022
Phone: 1-800-DIN-RAIL (346-7245) | Fax: (262) 255-6222
Email: info.us@wago.com | Web: www.wago.us

Do you have any questions about our products?
We are always happy to take your call at {0}.

Data sheet | Item number: 2060-452/998-404

SMD PCB terminal block; push-button; 0.75 mm²; Pin spacing 4 mm; 2-pole; Push-in CAGE CLAMP®; in tape-and-reel packaging; 0,75 mm²; white

www.wago.com/2060-452/998-404

RoHS Compliant ✓ BOMcheck.net Color:

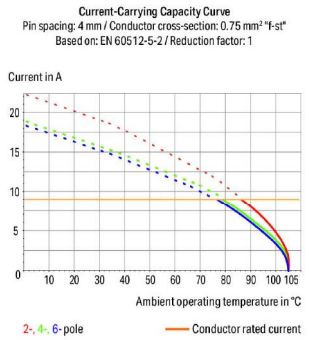

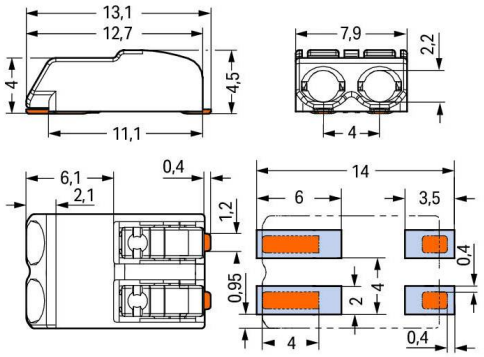

L = (pole no. x pin spacing) – 0.1 mm

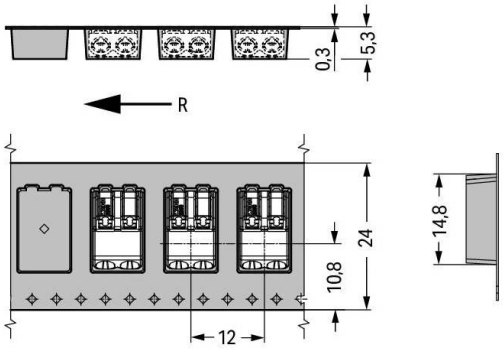

R = Feed direction

Subject to changes. Please also observe the further product documentation!

WAGO Corporation
Germantown, WI 53022
Phone: 1-800-DIN-RAIL (346-7245) | Fax: (262) 255-6222
Email: info.us@wago.com | Web: www.wago.us

Do you have any questions about our products?
We are always happy to take your call at {0}.

Item description

- SMD PCB terminal blocks with Push-in CAGE CLAMP® connection technology and push-buttons
- Push-in termination of solid and ferruled conductors
- Convenient termination/removal of fine-stranded conductors via push-buttons
- Just 4.5 mm tall
- Available in tape-and-reel packaging for automated assembly

Note:

Application notes:

Suitable for lead-free, reflow-soldering profiles per DIN EN 61760-1 and IEC 60068-2-58 up to max. 260°C peak temperature. Due to application-specific variables (component configuration and orientation, type of soldering machine, solder paste), trial runs are recommended to ensure product and process compatibility under actual manufacturing conditions.

Note:

Depending on reflow soldering temperatures and times, color deviations may occur. These deviations will have no impact on functionality.

Recommendation:

Recommendation for stencil:

Material thickness: 150 µm; Pattern layout identical to solder pad layout

Subject to changes. Please also observe the further product documentation!

Data
Electrical data

Ratings per IEC/EN 60664-1

Ratings per	IEC/EN 60664-1
Rated voltage (III / 3)	63 V
Rated surge voltage (III/3)	2.5 kV
Rated voltage (III/2)	160 V
Rated surge voltage (III/2)	2.5 kV
Nominal voltage (II/2)	320 V
Rated surge voltage (II/2)	2.5 kV
Rated current	9 A
Legend (ratings)	(III / 2) ≙ Overvoltage category III / Pollution degree 2

Ratings per UL 1059

Approvals per	UL 1059

Ratings per UL 1977

Rated voltage UL 1977	320 V
Rated current UL 1977	9 A

Ratings per CSA

Approvals per	CSA

Connection data

Connection technology	Push-in CAGE CLAMP®
Actuation type	Push-button
Solid conductor	0.2 … 0.75 mm² / 24 … 18 AWG
Fine-stranded conductor	0.2 … 0.75 mm² / 24 … 18 AWG
Fine-stranded conductor; with insulated ferrule	0.25 … 0.34 mm²
Fine-stranded conductor; with uninsulated ferrule	0.25 … 0.34 mm²
Strip length	7 … 9 mm / 0.28 … 0.35 inch
Conductor connection direction to PCB	0°
Pole No.	2
Total number of connection points	2

Subject to changes. Please also observe the further product documentation!

WAGO Corporation
Germantown, WI 53022
Phone: 1-800-DIN-RAIL (346-7245) | Fax: (262) 255-6222
Email: info.us@wago.com | Web: www.wago.us

Do you have any questions about our products?
We are always happy to take your call at {0}.

Total number of potentials	2
Number of connection types	1
Number of levels	1

Physical data

Pin spacing	4 mm / 0.157 inch
Width	7.9 mm / 0.311 inch
Height	4.5 mm / 0.177 inch
Depth	13.1 mm / 0.516 inch
Reel diameter of tape-and-reel packaging	330 mm
Tape width	24 mm

PCB contact

PCB contact	SMD

Material Data

Color	white
Material group	I
Insulation material	Polyphthalamide (PPA GF)
Flammability class per UL94	V0
Clamping spring material	Chrome nickel spring steel (CrNi)
Contact material	Copper alloy
Contact plating	tin-plated
Weight	0.5 g

Environmental Requirements

Limit temperature range	-60 … +105 °C

Commercial data

Product Group	33 (Printed Circuit)
Packaging type	BOX
Country of origin	CH
GTIN	4055143541244
Customs tariff number	85369010000

Subject to changes. Please also observe the further product documentation!

WAGO Corporation
Germantown, WI 53022
Phone: 1-800-DIN-RAIL (346-7245) | Fax: (262) 255-6222
Email: info.us@wago.com | Web: www.wago.us

Do you have any questions about our products?
We are always happy to take your call at {0}.

Approvals / Certificates

Country specific Approvals

Logo	Approval	Additional Approval Text	Certificate name
	CCA DEKRA Certification B.V.	EN 60947	NTR NL-7724
	CCA DEKRA Certification B.V.	EN 60998	NTR NL 7725
	CCA DEKRA Certification B.V.	EN 60838	NTR NL 2168246
	KEMA/KEUR DEKRA Certification B.V.	EN 60838	2168246.01
	KEMA/KEUR DEKRA Certification B.V.	EN 60998	71-108181
	KEMA/KEUR DEKRA Certification B.V.	EN 60947	71-108183

UL-Approvals

Logo	Approval	Additional Approval Text	Certificate name
	cURus Underwriters Laboratories Inc.	UL 1977	20160727-E45171

Compatible products

General accessories

Subject to changes. Please also observe the further product documentation!

WAGO Corporation
Germantown, WI 53022
Phone: 1-800-DIN-RAIL (346-7245) | Fax: (262) 255-6222
Email: info.us@wago.com | Web: www.wago.us

Do you have any questions about our products?
We are always happy to take your call at {0}.

	Item no.: 2060-952/028-000 Board-to-Board Link; Pin spacing 4 mm; 2-pole; Length: 28 mm; white	www.wago.com/2060-952/028-000
	Item no.: 2060-952/028-004 Board-to-Board Link; Pin spacing 4 mm; 2-pole; Length: 28 mm; black	www.wago.com/2060-952/028-004
tools		
	Item no.: 2060-189 Operating tool; made of insulating material; for 2060 Series; white	www.wago.com/2060-189
	Item no.: 206-860 Operating tool; for 2060 Series; multicoloured	www.wago.com/206-860
ferrule		
	Item no.: 216-131 Ferrule; Sleeve for 0.25 mm² / AWG 24; uninsulated; electro-tin plated; silver-colored	www.wago.com/216-131
	Item no.: 216-132 Ferrule; Sleeve for 0.34 mm² / AWG 24; uninsulated; electro-tin plated	www.wago.com/216-132
	Item no.: 216-301 Ferrule; Sleeve for 0.25 mm² / AWG 24; insulated; electro-tin plated; yellow	www.wago.com/216-301
	Item no.: 216-302 Ferrule; Sleeve for 0.34 mm² / 22 AWG; insulated; electro-tin plated; green	www.wago.com/216-302

Downloads

Documentation

Additional Information

Technical explanations	2019. 4. 3	pdf 3.6 MB	Download

CAD files

CAD data

2D/3D Models 2060-452/998-404	URL	Download

CAE data

ZUKEN Portal 2060-452/998-404	URL	Download

Subject to changes. Please also observe the further product documentation!

WAGO Corporation
Germantown, WI 53022
Phone: 1-800-DIN-RAIL (346-7245) | Fax: (262) 255-6222
Email: info.us@wago.com | Web: www.wago.us

Do you have any questions about our products?
We are always happy to take your call at {0}.

Installation Notes

Conductor termination

Insert solid conductors via push-in termination.

Conductor termination

Insert/remove fine-stranded conductors by lightly pressing on push-button (e.g., via 206-860 Operating Tool).

Subject to changes. Please also observe the further product documentation!

WAGO Corporation
Germantown, WI 53022
Phone: 1-800-DIN-RAIL (346-7245) | Fax: (262) 255-6222
Email: info.us@wago.com | Web: www.wago.us

Do you have any questions about our products?
We are always happy to take your call at {0}.

Terminal blocks can be arranged side-by-side without loss of poles.

Subject to changes. Please also observe the further product documentation!

WAGO Corporation
Germantown, WI 53022
Phone: 1-800-DIN-RAIL (346-7245) | Fax: (262) 255-6222
Email: info.us@wago.com | Web: www.wago.us

Do you have any questions about our products?
We are always happy to take your call at {0}.

Model1	Model2	Part Number
Q-series_US	LT-QB22A	SI-B8V201B20US
Q-series_US	LT-QB22A	SI-B8U201B20US
Q-series_US	LT-QB22A	SI-B8T201B20US
Q-series_US	LT-QB22A	SI-B8R201B20US
Q-series_US	LT-Q562A	SI-B8V101560US
Q-series_US	LT-Q562A	SI-B8U101560US
Q-series_US	LT-Q562A	SI-B8T101560US
Q-series_US	LT-Q562A	SI-B8R101560US
Q-series_US	LT-Q562A	SI-B8Q101560US
Q-series_US	LT-Q282A	SI-B8V051280US
Q-series_US	LT-Q282A	SI-B8U051280US
Q-series_US	LT-Q282A	SI-B8T051280US
Q-series_US	LT-Q282A	SI-B8R051280US
Q-series_EU	LT-Q562B	SI-B8V103560EU
Q-series_EU	LT-Q562B	SI-B8T103560EU
Q-series_EU	LT-Q282B	SI-B8V053280EU
Q-series_EU	LT-Q282B	SI-B8T053280EU
Q-series_EU_LEDiL	Q-Series	SI-B8V104560EU
Q-series_EU_LEDiL	Q-Series	SI-B8T104560EU
Q-series_EU_LEDiL	Q-Series	SI-B8R104560EU
Q-series_EU_LEDiL	Q-Series	SI-B8P104560EU
T-series US	LT-T562C	SI-B8A131560WW
T-series US	LT-T282C	SI-B8A071280WW
M-series Gen3	LT-MB22D_G3	SI-B8V341B2001
M-series Gen3	LT-MB22D_G3	SI-B8U341B2001
M-series Gen3	LT-MB22D_G3	SI-B8T341B2001
M-series Gen3	LT-MB22D_G3	SI-B8R341B2001
M-series Gen3	LT-M562C_G3	SI-B8V17256001
M-series Gen3	LT-M562C_G3	SI-B8U17256001
M-series Gen3	LT-M562C_G3	SI-B8T17256001
M-series Gen3	LT-M562C_G3	SI-B8R17256001
M-series Gen3	LT-M282C_G3	SI-B8V11428001
M-series Gen3	LT-M282C_G3	SI-B8U11428001
M-series Gen3	LT-M282C_G3	SI-B8T11428001
M-series Gen3	LT-M282C_G3	SI-B8R11428001
V-series GEN2	LT-V562C	SI-B8V17256CWW
V-series GEN2	LT-V562C	SI-B8U17256CWW
V-series GEN2	LT-V562C	SI-B8T17256CWW
V-series GEN2	LT-V562C	SI-B8R17256CWW
V-series GEN2	LT-V562F	SI-B8V26256CUS
V-series GEN2	LT-V562F	SI-B8U26256CUS

V-series GEN2	LT-V562F	SI-B8T26256CUS
V-series GEN2	LT-V562F	SI-B8R26256CUS
V-series GEN2	LT-V564F	SI-B8V52256CUS
V-series GEN2	LT-V564F	SI-B8U52256CUS
V-series GEN2	LT-V564F	SI-B8T52256CUS
V-series GEN2	LT-V564F	SI-B8R52256CUS
V-series GEN2	LT-VB22C	SI-B8V342B2CUS
V-series GEN2	LT-VB22C	SI-B8U342B2CUS
V-series GEN2	LT-VB22C	SI-B8T342B2CUS
V-series GEN2	LT-VB22C	SI-B8R342B2CUS
V-series GEN2	LT-VB22F_G2	SI-B8V522B2CUS
V-series GEN2	LT-VB22F_G2	SI-B8U522B2CUS
V-series GEN2	LT-VB22F_G2	SI-B8T522B2CUS
V-series GEN2	LT-VB22F_G2	SI-B8R522B2CUS
V-series GEN2	LT-VB24F_G2	SI-B8V481B20US
V-series GEN2	LT-VB24F_G2	SI-B8U481B20US
V-series GEN2	LT-VB24F_G2	SI-B8T481B20US
V-series GEN2	LT-VB24F_G2	SI-B8R481B20US
S-series G3 CRI80+	LT-S562V (LM281B+)	SI-B8V12A56SEU
S-series G3 CRI80+	LT-S562V (LM281B+)	SI-B8T12A56SEU
S-series G3 CRI80+	LT-S562V (LM281B+)	SI-B8P12A56SEU
S-series G3 CRI80+	LT-S282V (LM281B+)	SI-B8V06A28SEU
S-series G3 CRI80+	LT-S282V (LM281B+)	SI-B8T06A28SEU
S-series G3 CRI80+	LT-S282V (LM281B+)	SI-B8P06A28SEU
S-series G3 CRI90+	LT-S562V (LM281B+)	SI-B9V12A56SEU
S-series G3 CRI90+	LT-S562V (LM281B+)	SI-B9T12A56SEU
S-series G3 CRI90+	LT-S562V (LM281B+)	SI-B9P12A56SEU
S-series G3 CRI90+	LT-S282V (LM281B+)	SI-B9V06A28SEU
S-series G3 CRI90+	LT-S282V (LM281B+)	SI-B9T06A28SEU
S-series G3 CRI90+	LT-S282V (LM281B+)	SI-B9P06A28SEU
S-series G3 CRI80+	LT-S562W (LM281B+)	SI-B8V06A56SEU
S-series G3 CRI80+	LT-S562W (LM281B+)	SI-B8T06A56SEU
S-series G3 CRI80+	LT-S562W (LM281B+)	SI-B8P06A56SEU
S-series G3 CRI80+	LT-S282W (LM281B+)	SI-B8V03A28SEU
S-series G3 CRI80+	LT-S282W (LM281B+)	SI-B8T03A28SEU
S-series G3 CRI80+	LT-S282W (LM281B+)	SI-B8P03A28SEU
S-series G3 CRI90+	LT-S562W (LM281B+)	SI-B9V06A56SEU
S-series G3 CRI90+	LT-S562W (LM281B+)	SI-B9T06A56SEU
S-series G3 CRI90+	LT-S562W (LM281B+)	SI-B9P06A56SEU
S-series G3 CRI90+	LT-S282W (LM281B+)	SI-B9V03A28SEU
S-series G3 CRI90+	LT-S282W (LM281B+)	SI-B9T03A28SEU
S-series G3 CRI90+	LT-S282W (LM281B+)	SI-B9P03A28SEU
H-series_US 4ft	LT-HB22D	SI-B8V221B2HUS
H-series_US 4ft	LT-HB22D	SI-B8U221B2HUS

H-series_US 4ft	LT-HB22D	SI-B8T221B2HUS
H-series_US 4ft	LT-HB22D	SI-B8R221B2HUS
H-series_US 4ft	LT-HB22F	SI-B9W221B2HUS
H-series_US 4ft	LT-HB22F	SI-B9V221B2HUS
H-series_US 4ft	LT-HB22F	SI-B9U221B2HUS
H-series_US 4ft	LT-HB22F	SI-B9T221B2HUS
H-series_US	LT-H562D	SI-B8V11156HUS
H-series_US	LT-H562D	SI-B8U11156HUS
H-series_US	LT-H562D	SI-B8T11156HUS
H-series_US	LT-H562D	SI-B8R11156HUS
H-series_US	LT-H562F	SI-B9W11156HUS
H-series_US	LT-H562F	SI-B9V11156HUS
H-series_US	LT-H562F	SI-B9U11156HUS
H-series_US	LT-H562F	SI-B9T11156HUS
H-series_US	LT-H282D	SI-B8V05128HUS
H-series_US	LT-H282D	SI-B8U05128HUS
H-series_US	LT-H282D	SI-B8T05128HUS
H-series_US	LT-H282D	SI-B8R05128HUS
H-series_US	LT-H282F	SI-B9W05128HUS
H-series_US	LT-H282F	SI-B9V05128HUS
H-series_US	LT-H282F	SI-B9U05128HUS
H-series_US	LT-H282F	SI-B9T05128HUS
LAM30 CRI90+	LAM-SQ30C	SI-B9W111250WW
LAM30 CRI90+	LAM-SQ30C	SI-B9Q111250WW
LAM30 CRI80+	LAM-SQ30C	SI-B8V114250WW
LAM30 CRI80+	LAM-SQ30C	SI-B8T114250WW
LAM30 CRI80+	LAM-SQ30C	SI-B8P114250WW
LAM30 CRI80+	LAM-RT30C	SI-B8V116280WW
LAM30 CRI80+	LAM-RT30C	SI-B8T116280WW
LAM30 CRI80+	LAM-RT30C	SI-B8P116280WW
Finger30 CRI80+	Finger-SQ30C	SI-B8V113250WW
Finger30 CRI80+	Finger-SQ30C	SI-B8T113250WW
Finger30 CRI80+	Finger-SQ30C	SI-B8P113250WW
Finger30 CRI80+	Finger-RT30C	SI-B8V115280WW
Finger30 CRI80+	Finger-RT30C	SI-B8T115280WW
Finger30 CRI80+	Finger-RT30C	SI-B8P115280WW
Finger64 CRI80+	Finger-SQ64C	SI-B8V102250WW
Finger64 CRI80+	Finger-SQ64C	SI-B8U102250WW
Finger64 CRI80+	Finger-SQ64C	SI-B8T102250WW
Finger64 CRI80+	Finger-SQ64C	SI-B8R102250WW
Finger64 CRI80+	Finger-SQ64C	SI-B8P102250WW
Finger64 CRI80+	Finger-RT64C	SI-B8V104280WW
Finger64 CRI80+	Finger-RT64C	SI-B8U104280WW
Finger64 CRI80+	Finger-RT64C	SI-B8T104280WW
Finger64 CRI80+	Finger-RT64C	SI-B8R104280WW
Finger64 CRI80+	Finger-RT64C	SI-B8P102280WW
Finger128 CRI80+	Finger-128D	SI-B8V121530WW

Finger128 CRI80+	Finger-128D	SI-B8T121530WW
F-series Gen3	LT-F562B	SI-B8V261560WW
F-series Gen3	LT-F562B	SI-B8U261560WW
F-series Gen3	LT-F562B	SI-B8T261560WW
F-series Gen3	LT-F562B	SI-B8R261560WW
F-series Gen3	LT-F564B	SI-B8V521560WW
F-series Gen3	LT-F564B	SI-B8U521560WW
F-series Gen3	LT-F564B	SI-B8T521560WW
F-series Gen3	LT-F564B	SI-B8R521560WW
F-series Gen3	LT-FB22B	SI-B8V521B20WW
F-series Gen3	LT-FB22B	SI-B8U521B20WW
F-series Gen3	LT-FB22B	SI-B8T521B20WW
F-series Gen3	LT-FB22B	SI-B8R521B20WW
F-series Gen3	LT-FB24B	SI-B8VZ91B20WW
F-series Gen3	LT-FB24B	SI-B8UZ91B20WW
F-series Gen3	LT-FB24B	SI-B8TZ91B20WW
F-series Gen3	LT-FB24B	SI-B8RZ91B20WW
F-series Gen3	LT-F284B	SI-B8V261280WW
F-series Gen3	LT-F284B	SI-B8U261280WW
F-series Gen3	LT-F284B	SI-B8T261280WW
F-series Gen3	LT-F284B	SI-B8R261280WW
H inFlux	H inFlux_L04	SL-B8V2N80LAWW
H inFlux	H inFlux_L04	SL-B8U2N80LAWW
H inFlux	H inFlux_L04	SL-B8T2N80LAWW
H inFlux	H inFlux_L04	SL-B8R2N80LAWW
H inFlux	H inFlux_L06	SL-B8V3N80LAWW
H inFlux	H inFlux_L06	SL-B8U3N80LAWW
H inFlux	H inFlux_L06	SL-B8T3N80LAWW
H inFlux	H inFlux_L06	SL-B8R3N80LAWW
H inFlux	H inFlux_L09	SL-B8V4N90LAWW
H inFlux	H inFlux_L09	SL-B8U4N90LAWW
H inFlux	H inFlux_L09	SL-B8T4N90LAWW
H inFlux	H inFlux_L09	SL-B8R4N90LAWW
H inFlux	H inFlux_S02	SL-B8V1N30LAWW
H inFlux	H inFlux_S02	SL-B8U1N30LAWW
H inFlux	H inFlux_S02	SL-B8T1N30LAWW
H inFlux	H inFlux_S02	SL-B8R1N30LAWW
H inFlux	H inFlux_S03	SL-B8V1N60LAWW
H inFlux	H inFlux_S03	SL-B8U1N60LAWW
H inFlux	H inFlux_S03	SL-B8T1N60LAWW
H inFlux	H inFlux_S03	SL-B8R1N60LAWW
H inFlux	H inFlux_S04	SL-B8V2N70LAWW
H inFlux	H inFlux_S04	SL-B8U2N70LAWW
H inFlux	H inFlux_S04	SL-B8T2N70LAWW
H inFlux	H inFlux_S04	SL-B8R2N70LAWW
Horticulture L2 Module	1ft	SL-B8R5C9H1AWW
Horticulture L2 Module	2ft	SL-B8R5C9H2AWW

Breakaway	44" Breakaway	SI-B9W311B20US
Breakaway	44" Breakaway	SI-B9V311B20US
Breakaway	44" Breakaway	SI-B9U311B20US
Breakaway	44" Breakaway	SI-B9T311B20US
Breakaway	44" Breakaway	SI-B9R311B20US
Breakaway	47" Breakaway	SI-B9W311C00US
Breakaway	47" Breakaway	SI-B9V311C00US
Breakaway	47" Breakaway	SI-B9U311C00US
Breakaway	47" Breakaway	SI-B9T311C00US
Breakaway	47" Breakaway	SI-B9R311C00US
Back-lit SE	Static White 2ft	SI-B8V031500WW
Back-lit SE	Static White 2ft	SI-B8U031500WW
Back-lit SE	Static White 2ft	SI-B8T031500WW
Back-lit SE	Static White 2ft	SI-B8R031500WW
Back-lit SE	Static White 4ft	SI-B8V071B00WW
Back-lit SE	Static White 4ft	SI-B8U071B00WW
Back-lit SE	Static White 4ft	SI-B8T071B00WW
Back-lit SE	Static White 4ft	SI-B8R071B00WW
Back-lit SE	Tunable White 2ft	SI-B8A031500WW
Back-lit SE	Tunable White 4ft	SI-B8A071B00WW