Product Change Notification / ASER-23WWAI681

Date:

12-Aug-2020

Product Category:

Memory

PCN Type:

Manufacturing Change

Notification Subject:

CCB 4235 Final Notice: Qualification of MMT as a new final test site for selected Atmel AT27C/BV/LVxxxPU/JUxxx products

Affected CPNs:

ASER-23WWAI681_Affected_CPN_08122020.pdf
ASER-23WWAI681_Affected_CPN_08122020.csv

Notification Text:

PCN Status: Final notification

PCN Type: Manufacturing Change

Microchip Parts Affected: Please open one of the icons found in the Affected CPNs section above.

NOTE: For your convenience Microchip includes identical files in two formats (.pdf and .xls).

Description of Change: Qualification of MMT as a new final test site for selected Atmel AT27C/BV/LVxxxPU/JUxxx products.

Pre Change: Tested at MPHIL final test site.

Post Change: Tested at MMT final test site.

Pre and Post Change Summary:

	Pre Change	Post Change

Final Test Site		Microchip Technology Operations (Philippines) Corporation (MPHL)	Microchip Technology Thailand (MMT)
Packing Media: Tape and Reel	Base Quantity Multiple (BQM)	Various. No BQM change.	
	Pin 1 Orientation	Quadrant 1	Quadrant 1
	With Desiccant and HIC?	Yes	Yes
	Carrier Tape Dimension	See pre and post change comparison.	
	Cover Tape Dimension	Minor dimensional changes. See pre and post change comparison.	
	Reel Dimension	Minor dimensional changes. See pre and post change comparison.	
	Packaging Process	See pre and post change comparison.	
Packing Media: Tube	Base Quantity Multiple (BQM)	Various. No BQM change.	
	Pin 1 Orientation	Pin 1 Toward Black/Blue/Green Pin	Pin 1 Toward White Pin
	Tube Dimensions	No dimensional changes	
	Plug Color	Clear	Clear
	Packaging Process	See pre and post change comparison.	

Impacts to Data Sheet: None

Change Impact: None

Reason for Change: To improve manufacturability by qualifying MMT as a new final test site.

Change Implementation Status: In Progress

Estimated First Ship Date: August 17, 2020 (date code: 2034)

NOTE: Please be advised that after the estimated first ship date customers may receive pre and post change parts.

Time Table Summary:

	June 2020					July 2020				August 2020				
Workweek	23	24	25	26	27	28	29	30	31	32	33	34	35	36
Initial PCN Issue Date				X										

Qual Report Availability							X							
Final PCN Issue Date							X							
Estimated Implementation Date												X		

Method to Identify Change: Traceability code

Qualification Report: Please open the attachments included with this PCN labeled as PCN_#_Qual_Report.

Revision History:June 25, 2020: Issued initial notification.**July 14, 2020:** Issued final notification. Attached the qualification report. Provided estimated first ship date to be on August 17, 2020**July 28, 2020:** Reissued final notification. Reattached the qualification report. Corrected the pin orientation within the PCN letter. Corrected titles contained in page 5 and 6 of the Pre and Post Change document.**August 5 & 6, 2020:** Reissued final notification. Corrected tolerance typo and lead count typo contained in Pre and Post Change document.**August 11, 2020:** Reissued final notification. Corrected tolerance typo contained in Pre and Post Change document.

The change described in this PCN does not alter Microchip's current regulatory compliance regarding the material content of the applicable products.

Attachments:

PCN_ASER-23WWAI681_Pre and Post Change Summary.pdf
PCN_ASER-23WWAI681_Qual_Report.pdf

Please contact your local Microchip sales office with questions or concerns regarding this notification.

Terms and Conditions:

If you wish to receive Microchip PCNs via email please register for our PCN email service at our PCN home page select register then fill in the required fields. You will find instructions about registering for Microchips PCN email service in the PCN FAQ section.

If you wish to change your PCN profile, including opt out, please go to the PCN home page select login and sign into your myMicrochip account. Select a profile option from the left navigation bar and make the applicable selections.

PCN # ASER-23WWAI681
CCB 4235_Pre and Post Change Summary

Affected Parts List

Packing Media: Tube

CPN	Lead Count	Pkg Type	Base Quantity Multiple	Packing Media
AT27BV256-70JU	32.00	PLCC	32.00	Tube
AT27LV256A-90JU	32.00	PLCC	32.00	Tube
AT27LV512A-90JU	32.00	PLCC	32.00	Tube
AT27BV010-90JU	32.00	PLCC	32.00	Tube
AT27LV010A-70JU	32.00	PLCC	32.00	Tube
AT27LV020A-12JU	32.00	PLCC	32.00	Tube
AT27C256R-45JU	32.00	PLCC	32.00	Tube
AT27C256R-70JU	32.00	PLCC	32.00	Tube
AT27C256R-70JU-306	32.00	PLCC	32.00	Tube
AT27C256R-45PU	28.00	PDIP	14.00	Tube
AT27C256R-70PU	28.00	PDIP	14.00	Tube
AT27C512R-45JU	32.00	PLCC	32.00	Tube
AT27C512R-70JU	32.00	PLCC	32.00	Tube
AT27C512R-45PU	28.00	PDIP	14.00	Tube
AT27C512R-70PU	28.00	PDIP	14.00	Tube
AT27C1024-45PU	40.00	PDIP	10.00	Tube
AT27C1024-70PU	40.00	PDIP	10.00	Tube
AT27C2048-90PU	40.00	PDIP	10.00	Tube

CPN	Lead Count	Pkg Type	Base Quantity Multiple	Packing Media
AT27C020-55PU	32.00	PDIP	12.00	Tube
AT27C020-90PU	32.00	PDIP	12.00	Tube
AT27C020-55JU	32.00	PLCC	32.00	Tube
AT27C020-90JU	32.00	PLCC	32.00	Tube
AT27C4096-90PU	40.00	PDIP	10.00	Tube
AT27C4096-55PU	40.00	PDIP	10.00	Tube
AT27C040-70PU	32.00	PDIP	12.00	Tube
AT27C040-90PU	32.00	PDIP	12.00	Tube
AT27C040-70JU	32.00	PLCC	32.00	Tube
AT27C040-90JU	32.00	PLCC	32.00	Tube
AT27C080-90PU	32.00	PDIP	12.00	Tube
AT27C080-90PU	32.00	PDIP	12.00	Tube
AT27C080-90JU	32.00	PLCC	32.00	Tube
AT27C080-90JU	32.00	PLCC	32.00	Tube
AT27C010-70PU	32.00	PDIP	12.00	Tube
AT27C010-45JU	32.00	PLCC	32.00	Tube
AT27C010-70JU	32.00	PLCC	32.00	Tube
AT27LV040A-90JU	32.00	PLCC	32.00	Tube

TUBE PACKING: PLCC Package

32L PLCC Tube Packing: MPHL

1. Pin 1 Orientation

For PLCC 20/28/44L

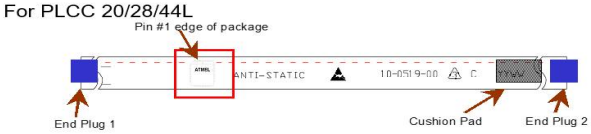

For PLCC 32L

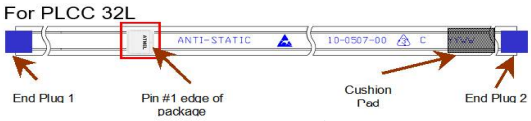

2. Tube Bundling

PLCC 32 – 30 tubes per bag
PLCC 44 – 20 tubes per bag

3. Moisture Barrier Bag Labels

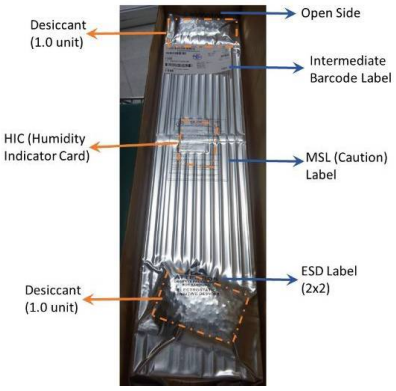

4. Wrap bag with bubble pack

5. Tube Box Packing

TUBE PACKING: PLCC Package

32L PLCC Tube Packing : MMT

1. Pin 1 Orientation

44L PLCC

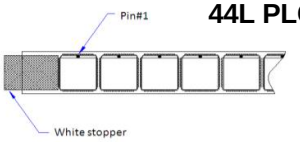

32L PLCC

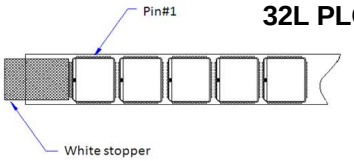

2. Tube Bundling

PLCC 32 – 30 tubes per bag
PLCC 44 – 20 tubes per bag

3. Moisture Barrier Bag Labels

4. Tube Box Packing

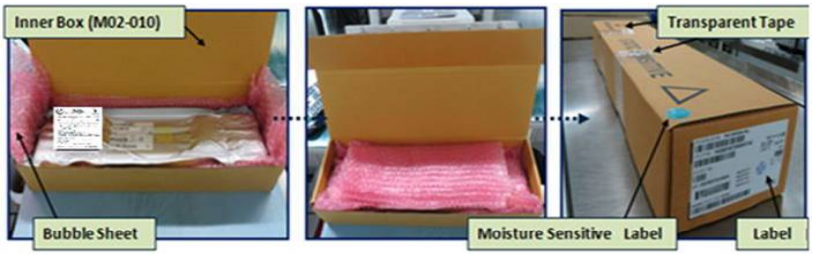

TUBE PACKING: PDIP Package

28L/32L/40L PDIP Tube Packing: MPHL

1. Pin 1 Orientation

For PDIP (600 mils)

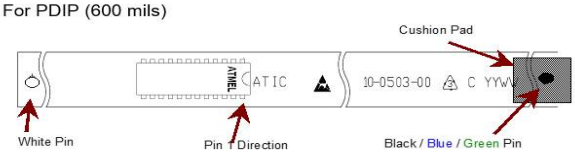

2. Tube Bundling

PDIP 32 – 40 Tubes/Bag
PDIP 40 – 24 Tubes/Bag

3. Shielding Bag Labels

4. Wrap bag with bubble pack

5. Tube Box Packing

TUBE PACKING: PDIP Package

28L/32L/40L PDIP Tube Packing: MMT

1. Pin 1 Orientation

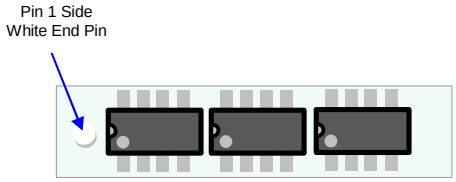

2. Tube Bundling

PDIP 28 – 24 Tubes/Bag
PDIP 32 – 40 Tubes/Bag
PDIP 40 – 24 Tubes/Bag

3. Antistatic Pink bag

4. Tube Outer Box Packing
Packing for PDIP tubes (Sample)

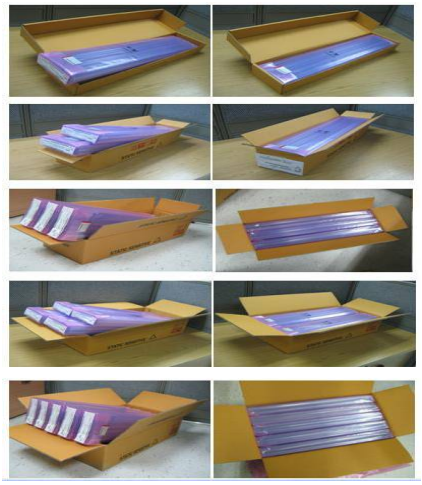

Affected Parts List

Packing Media: T/R

CPN	Lead Count	Pkg Type	Base Quantity Multiple	Packing Media
AT27BV256-70JU-T	32.00	PLCC	750.00	T/R
AT27LV256A-90JU-T	32.00	PLCC	750.00	T/R
AT27LV512A-90JU-T	32.00	PLCC	750.00	T/R
AT27BV010-90JU-T	32.00	PLCC	750.00	T/R
AT27LV010A-70JU-T	32.00	PLCC	750.00	T/R
AT27LV020A-12JU-T	32.00	PLCC	750.00	T/R
AT27C256R-45JU-T	32.00	PLCC	750.00	T/R
AT27C256R-70JU-T	32.00	PLCC	750.00	T/R
AT27C512R-45JU-T	32.00	PLCC	750.00	T/R

CPN	Lead Count	Pkg Type	Base Quantity Multiple	Packing Media
AT27C512R-70JU-T	32.00	PLCC	750.00	T/R
AT27C020-55JU-T	32.00	PLCC	750.00	T/R
AT27C020-90JU-T	32.00	PLCC	750.00	T/R
AT27C040-70JU-T	32.00	PLCC	750.00	T/R
AT27C040-90JU-T	32.00	PLCC	750.00	T/R
AT27C080-90JU-T	32.00	PLCC	750.00	T/R
AT27C010-45JU-T	32.00	PLCC	750.00	T/R
AT27C010-70JU-T	32.00	PLCC	750.00	T/R
AT27LV040A-90JU-T	32.00	PLCC	750.00	T/R

MPHL CARRIER TAPE

PLCC 32 CARRIER TAPE

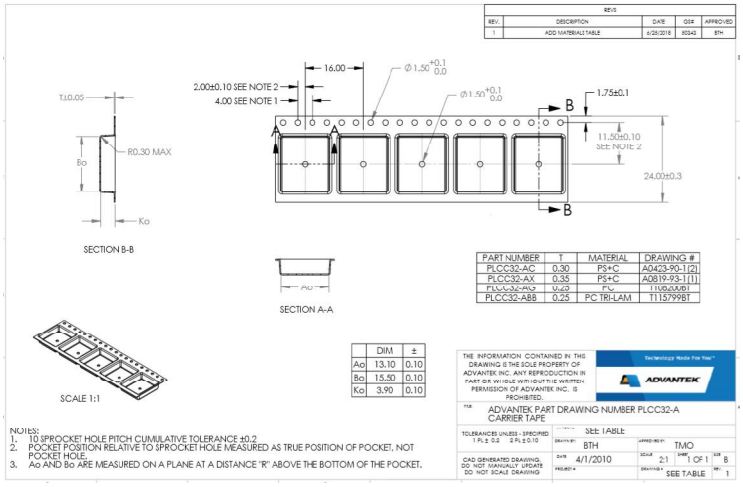

Supplier	Mfg. Part No.	W (mm.) ±0.3 or Specific	P (mm.) ±0.1 or Specific	A_0 ±0.1 or Specific	B_0 ±0.1 or Specific	K_0 ±0.1 or Specific	Thickness
Advantek	PLCC32-AC170.P1	24	16	13.10/-0.1	15.50+/-0.1	3.90+/-0.10	-

PLCC 44 CARRIER TAPE

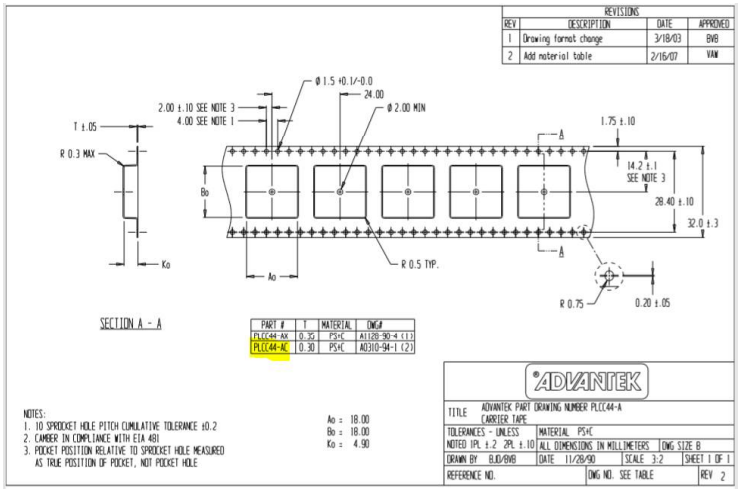

Supplier	Mfg. Part No.	W (mm.) ±0.3 or Specific	P (mm.) ±0.1 or Specific	A_0 ±0.1 or Specific	B_0 ±0.1 or Specific	K_0 ±0.1 or Specific	Thickness
Advantek	PLCC44-AC88.0R5	32	24	18+/-0.1	18+/-0.1	4.9+/-0.1	-

MMT CARRIER TAPE

PLCC 32 CARRIER TAPE

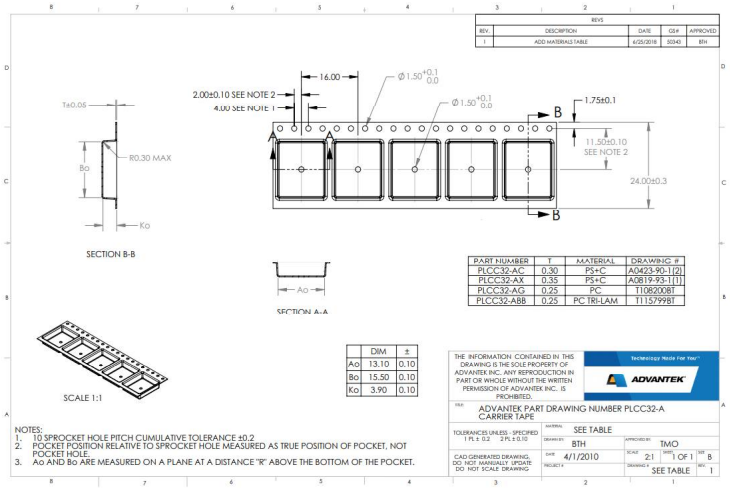

Unit in mm

Supplier	Mfg. Part No.	W (mm.) ±0.3 or Specific	P (mm.) ±0.1 or Specific	A_0 ±0.1 or Specific	B_0 ±0.1 or Specific	K_0 ±0.1 or Specific	Thickness
Advantek	PLCC32-AC170.M1	24	16	13.10/-0.1	15.50+/-0.1	3.90+/-0.10	0.30 +/-0.05

PLCC 44 CARRIER TAPE

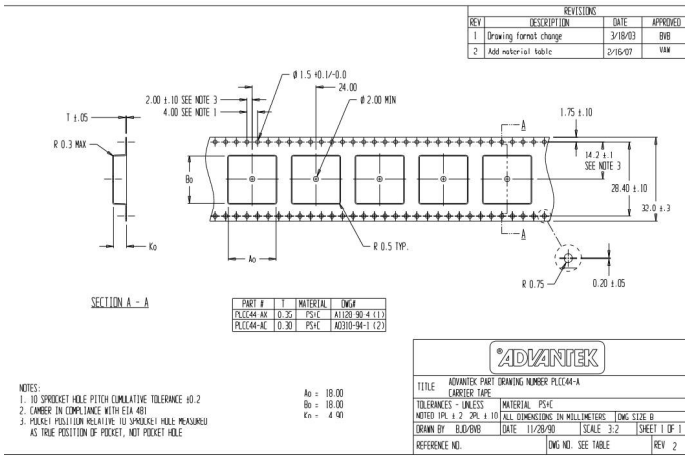

Unit in mm

Supplier	Mfg. Part No.	W (mm.) ±0.3 or Specific	P (mm.) ±0.1 or Specific	A_0 ±0.1 or Specific	B_0 ±0.1 or Specific	K_0 ±0.1 or Specific	Thickness
Advantek	PLCC44-AC88.0R5	32	24	18+/-0.1	18+/-0.1	4.9+/-0.1	0.30 +/-0.05

MPHL COVER TAPE

PLCC 32 COVER TAPE (Width: 24mm)

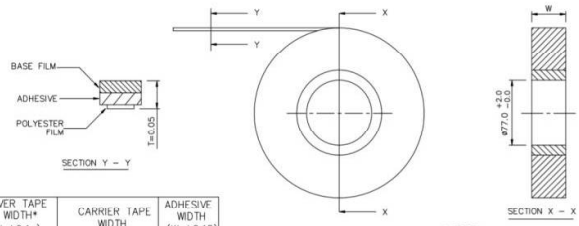

COVER TAPE WIDTH* (W ±0.1)	CARRIER TAPE WIDTH	ADHESIVE WIDTH (W ±0.15)
5.3	8	0.7x2
7.3	12	1.0x2
9.3	12	1.0x2
13.3	16	1.0x2
21.3	24	1.15x2
25.5, 26.3	32	1.15x2
37.5	44	1.65x2
49.5	56	1.65x2
65.5	72	1.65x2

NOTES
1 THICKNESS : 0.045–0.055mm.
2 LIGHT TRANSMITTANCE : >80%
3 TENSILE STRENGTH : 9.7kg/mm sq.
4 ELONGATION : >120%
5 SURFACE RESISTIVITY
UNDERSIDE : 10^{11} OHMS/SQ MAX.
TOPSIDE : 10^{4} OHMS/SQ
*6 OTHER COVER TAPE WIDTH REFER TO W14.08–04.

ALL DIMENSIONS IN MILLIMETRES UNLESS OTHERWISE STATED.

Carrier Width	Supplier	MCHP P/N	Supplier Part	Width "W" (mm)	Thickness (mm)	Sealing Mythology
24mm	CPak	211894	CP58 PSA	21.3 +/-0.1	0.050 ±0.010	Pressure Seal

PLCC 44 COVER TAPE (Width: 32mm)

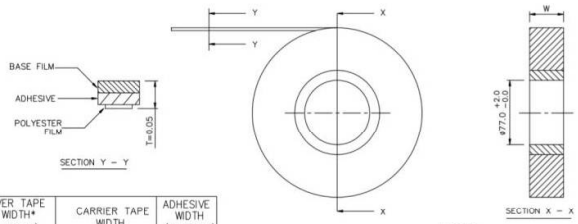

COVER TAPE WIDTH* (W ±0.1)	CARRIER TAPE WIDTH	ADHESIVE WIDTH (W ±0.15)
5.3	8	0.7x2
7.3	12	1.0x2
9.3	12	1.0x2
13.3	16	1.0x2
21.3	24	1.15x2
25.5, 26.3	32	1.15x2
37.5	44	1.65x2
49.5	56	1.65x2
65.5	72	1.65x2

NOTES
1 THICKNESS : 0.045–0.055mm.
2 LIGHT TRANSMITTANCE : >80%
3 TENSILE STRENGTH : 9.7kg/mm sq.
4 ELONGATION : >120%
5 SURFACE RESISTIVITY
UNDERSIDE : 10^{11} OHMS/SQ MAX.
TOPSIDE : 10^{4} OHMS/SQ
*6 OTHER COVER TAPE WIDTH REFER TO W14.08–04.

ALL DIMENSIONS IN MILLIMETRES UNLESS OTHERWISE STATED.

Carrier Width	Supplier	MCHP P/N	Supplier Part	Width "W" (mm)	Thickness (mm)	Sealing Mythology
32mm	CPak	211887	CP58 PSA	25.5 +/-0.1	0.050 ±0.010	Pressure Seal

MMT COVER TAPE

PLCC 32 COVER TAPE (Width: 24mm)

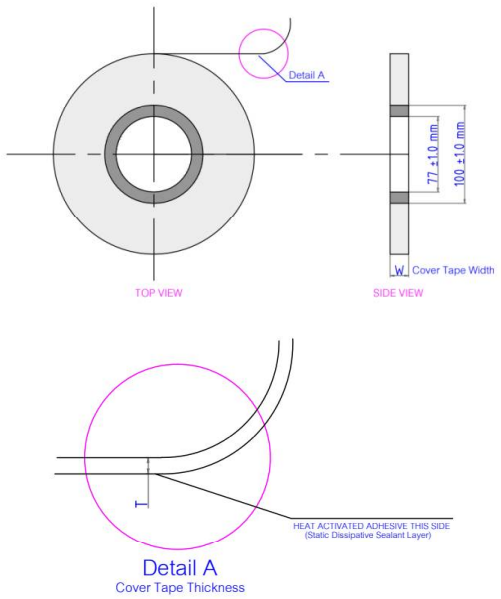

MTAI_COVER_TAP
WG-B25-CV-001a

Carrier Width	Supplier	MCHP P/N	Supplier Part	Width "W" (mm)	Thickness (mm)	Sealing Mythology
24mm	Sumitomo	22102002	CSL-Z7302	21.0 +/- 0.1	0.050 ±0.010	Heat Sealing

PLCC 44 COVER TAPE (Width: 32mm)

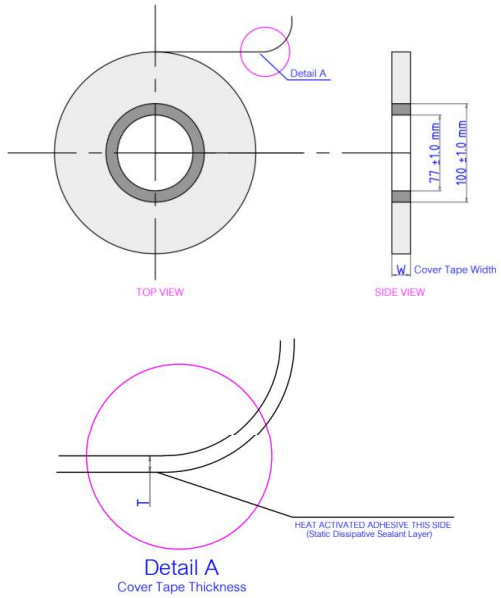

Carrier Width	Supplier	MCHP P/N	Supplier Part	Width "W" (mm)	Thickness (mm)	Sealing Mythology
32mm	Sumitomo	22104401	CSL-Z7302	25.5 +/- 0.1	0.050 ±0.010	Heat Sealing

Added by Satsawat

MPHL PLASTIC REEL

PLASTIC REEL: WIDTH 24mm

PLCC 32L

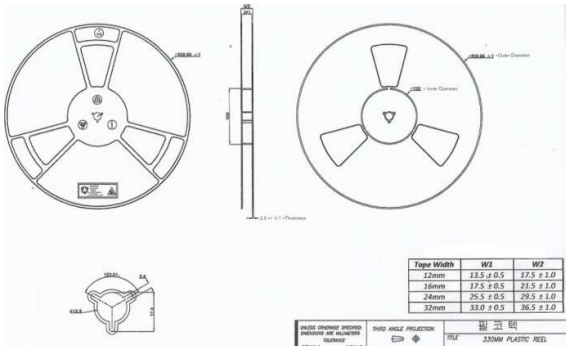

Width	MCHP P/N	Supplier Part	Hub	Color
24mm	211696	N/A	4inch (100mm)	White

PLASTIC REEL: WIDTH 32mm

PLCC 44L

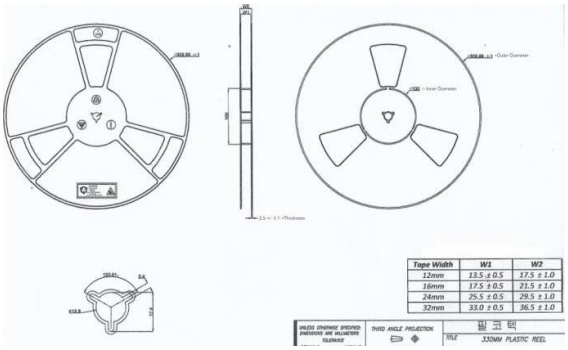

Width	MCHP P/N	Supplier Part	Hub	Color
32mm	211697	N/A	4inch (100mm)	White

MMT MPHL PLASTIC REEL

PLASTIC REEL: WIDTH 24mm

PLCC 32L

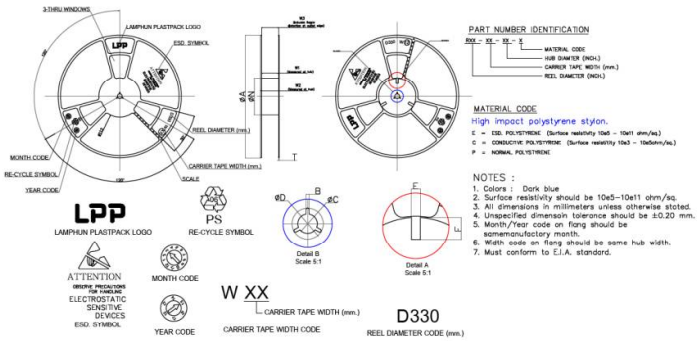

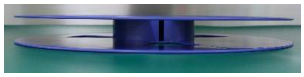

Width	MCHP P/N	Supplier Part	Hub	Color
24mm	23000024	R13-24-04-E	4inch (100mm)	Dark Blue

PLASTIC REEL: WIDTH 32mm

PLCC 44L

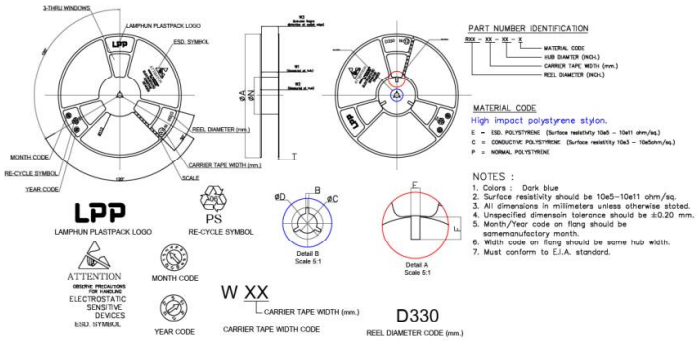

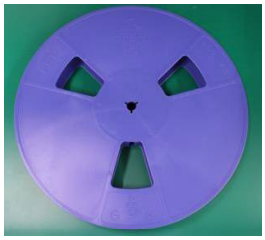

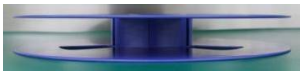

Width	MCHP P/N	Supplier Part	Hub	Color
32mm	23000023	R13-32-04-E	4inch (100mm)	Dark Blue

Plastic Reel (Width 24 mm)

Description	MPHIL	MMT
Color	White	Dark blue
Diameter	329.99 +/- 1.0	330 +/- 2.0
Hub	100	100 +/- 2.0
Width	25.5 +/- 0.5	24.4 +2.00/-0.00

Plastic Reel (Width 32 mm)

Description	MPHIL	MMT
Color	White	Dark blue
Diameter	329.99 +/- 1.0	330 +/- 2.0
Hub	100	100 +/- 2.0
Width	33 +/- 0.5	32.4 +/- 2.0

Added by Panisara

TAPE AND REEL PACKING PROCEDURE MPHL

MSL 2 – T/R REEL DRY PACK PROCEDURE (Ref Spec# PI-35015)

Pin 1 Orientation

Quadrant 1

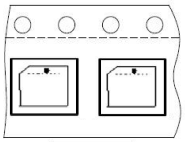

Carrier Tape

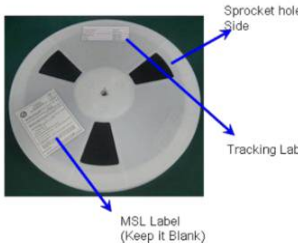

Label Placement at Box

TAPE AND REEL PACKING PROCEDURE MMT

MSL 2 – T/R REEL DRY PACK PROCEDURE (Ref Spec# PI-24069)

Pin 1 Orientation

Quadrant 1

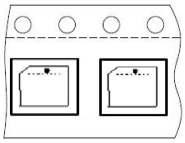

Carrier Tape

13" Reel for New MBB with Caution printing

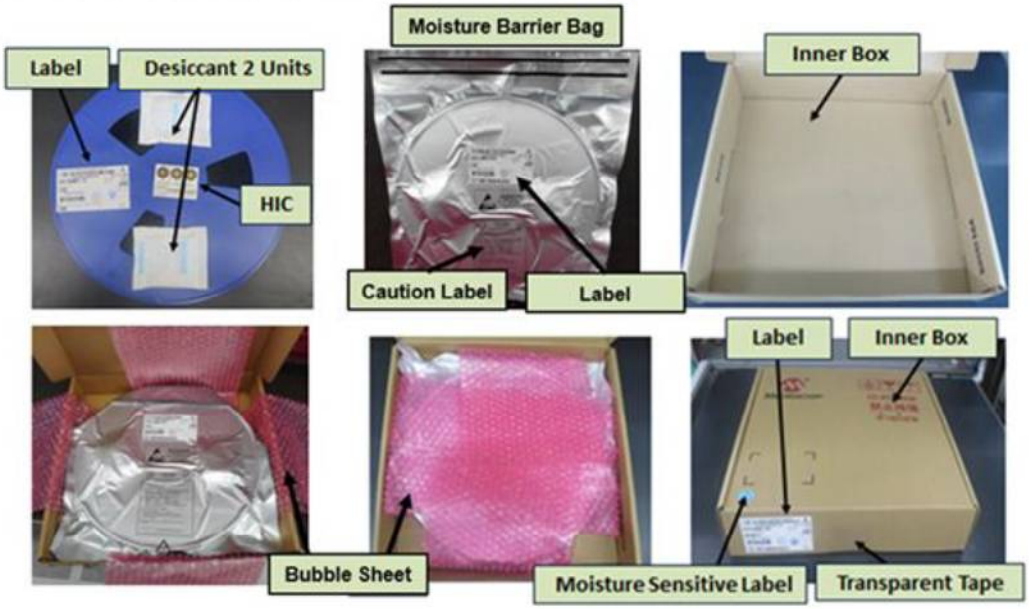

Figure 8.6.1B Dry pack for tape and reel

QUALIFICATION REPORT SUMMARY

PCN#: ASER-23WWAI681

Date:
July 10, 2020

Qualification of MMT as a new final test site for selected Atmel AT27C/BV/LVxxxPU/JUxxx products.

Purpose: **Qualification of MMT as a new final test site for selected Atmel AT27C/BV/LVxxxPU/JUxxx products.**

CCB No.: **4235**

Test / Evaluation	Test Conditions / Parameters	Results
Datalog/Bin Comparison	• Compare overall yield, speed distribution, test bin pass/fail results. • Accept if all match or justify the differences	Passed
Correlation Lot Report	• Yield at each step and reject analysis between systems. Min 3K units are tested for each program/density conversion we perform. • Accept on yield match within 1%	Passed

ASER-23WWAI681 - CCB 4235 Final Notice: Qualification of MMT as a new final test site for selected Atmel AT

Affected Catalog Part Numbers(CPN)

AT27BV256-70JU
AT27LV256A-90JU
AT27BV256-70JU-T
AT27LV256A-90JU-T
AT27LV512A-90JU
AT27LV512A-90JU-T
AT27BV010-90JU
AT27LV010A-70JU
AT27BV010-90JU-T
AT27LV010A-70JU-T
AT27LV020A-12JU
AT27LV020A-12JU-T
AT27C256R-45JU
AT27C256R-70JU
AT27C256R-70JU-306
AT27C256R-45PU
AT27C256R-70PU
AT27C256R-45JU-T
AT27C256R-70JU-T
AT27C512R-45JU
AT27C512R-70JU
AT27C512R-45PU
AT27C512R-70PU
AT27C512R-45JU-T
AT27C512R-70JU-T
AT27C1024-45PU
AT27C1024-70PU
AT27C2048-90PU
AT27C020-55PU
AT27C020-90PU
AT27C020-55JU
AT27C020-90JU
AT27C020-55JU-T
AT27C020-90JU-T
AT27C4096-90PU
AT27C4096-55PU
AT27C040-70PU
AT27C040-90PU
AT27C040-70JU
AT27C040-90JU
AT27C040-70JU-T
AT27C040-90JU-T

AT27C080-90PU
AT27C080-90JU
AT27C080-90JU-T
AT27C010-70PU
AT27C010-45JU
AT27C010-70JU
AT27C010-45JU-T
AT27C010-70JU-T
AT27LV040A-90JU
AT27LV040A-90JU-T