Product Change Notification / SYST-09NKRH449

Date:

10-Jul-2020

Product Category:

Memory

PCN Type:

Document Change

Notification Subject:

Data Sheet - AT24C128C/AT24C256C Automotive - Complete Datasheet

Affected CPNs:

SYST-09NKRH449_Affected_CPN_07102020.pdf
SYST-09NKRH449_Affected_CPN_07102020.csv

Notification Text:

SYST-09NKRH449

Microchip has released a new Product Documents for the AT24C128C/AT24C256C Automotive - Complete Datasheet of devices. If you are using one of these devices please read the document located at AT24C128C/AT24C256C Automotive - Complete Datasheet

Notification Status: Final

Description of Change: Corrected Product Identification System. Updated UDFN package drawing.

Impacts to Data Sheet: None

Reason for Change: To Improve Manufacturability

Change Implementation Status: Complete

Date Document Changes Effective: 10 July 2020

NOTE: Please be advised that this is a change to the document only the product has not been changed.

Markings to Distinguish Revised from Unrevised Devices: N/A

Attachments:

AT24C128C/AT24C256C Automotive - Complete Datasheet

Please contact your local Microchip sales office with questions or concerns regarding this notification.

Terms and Conditions:

If you wish to receive Microchip PCNs via email please register for our PCN email service at our PCN home page select register then fill in the required fields. You will find instructions about registering for Microchips PCN email service in the PCN FAQ section.

If you wish to change your PCN profile, including opt out, please go to the PCN home page select login and sign into your myMicrochip account. Select a profile option from the left navigation bar and make the applicable selections.

AT24C128C/AT24C256C

I²C Automotive Temperature Serial EEPROM 128-Kbit (16,384 x 8), 256-Kbit (32,768 x 8)

Features

- Low-Voltage, Medium-Voltage Operation:
  - Grade 1, V_{CC} = 2.5V to 5.5V
  - Grade 3, V_{CC} = 1.7V to 5.5V
- Internally Organized as 16,384 x 8 (128K) or 32,768 x 8 (256K)
- Extended Temperature Range (Grade 1 and Grade 3 as defined in AEC-Q100):
  - Grade 1 Temperature Range: -40°C to +125°C
  - Grade 3 Temperature Range: -40°C to +85°C
- I^2C-Compatible (Two-Wire) Serial Interface:
  - 100 kHz Standard mode
  - 400 kHz Fast mode
- Schmitt Triggers, Filtered Inputs for Noise Suppression
- Bidirectional Data Transfer Protocol
- Write-Protect Pin for Hardware Data Protection
- Ultra Low Active Current (3 mA maximum) and Standby Current (6 µA maximum)
- 64-Byte Page Write Mode:
  - Partial page writes allowed
- Random and Sequential Read Modes
- Self-Timed Write Cycle within 5 ms Maximum
- Automotive AEC-Q100 Qualified
- High Reliability:
  - Endurance: 1,000,000 write cycles
  - Data retention: 100 years
- Green Package Options (Lead-free/Halide-free/RoHS compliant)

Packages

- 8-Lead SOIC, 8-Lead TSSOP and 8-Pad UDFN

© 2020 Microchip Technology Inc.

Table of Contents

Features 1

Packages 1

1. Package Types (not to scale) 4

2. Pin Descriptions 5
   - 2.1. Device Address Inputs (A0, A1, A2) 5
   - 2.2. Ground 5
   - 2.3. Serial Data (SDA) 5
   - 2.4. Serial Clock (SCL) 5
   - 2.5. Write-Protect (WP) 5
   - 2.6. Device Power Supply (V_{CC}) 6

3. Description 7
   - 3.1. System Configuration Using Two-Wire Serial EEPROMs 7
   - 3.2. Block Diagram 8

4. Electrical Characteristics 9
   - 4.1. Absolute Maximum Ratings 9
   - 4.2. DC and AC Operating Range 9
   - 4.3. DC Characteristics 9
   - 4.4. AC Characteristics 10
   - 4.5. Electrical Specifications 11

5. Device Operation and Communication 13
   - 5.1. Clock and Data Transition Requirements 13
   - 5.2. Start and Stop Conditions 13
   - 5.3. Acknowledge and No-Acknowledge 14
   - 5.4. Standby Mode 14
   - 5.5. Software Reset 14

6. Memory Organization 16
   - 6.1. Device Addressing 16

7. Write Operations 18
   - 7.1. Byte Write 18
   - 7.2. Page Write 18
   - 7.3. Acknowledge Polling 19
   - 7.4. Write Cycle Timing 19
   - 7.5. Write Protection 20

8. Read Operations 21
   - 8.1. Current Address Read 21
   - 8.2. Random Read 21
   - 8.3. Sequential Read 22

9. Device Default Condition from Microchip 23

10. Packaging Information..... 24
10.1. Package Marking Information.....24
11. Revision History..... 33
The Microchip Website.....34
Product Change Notification Service.....34
Customer Support..... 34
Product Identification System.....35
Microchip Devices Code Protection Feature.....35
Legal Notice..... 36
Trademarks..... 36
Quality Management System..... 37
Worldwide Sales and Service.....38

1. Package Types (not to scale)

8-Lead SOIC/TSSOP
(Top View)

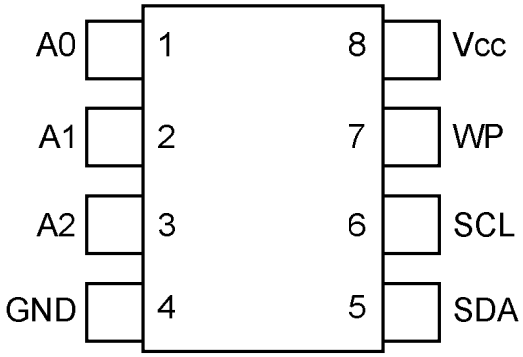

8-Pad UDFN
(Top View)

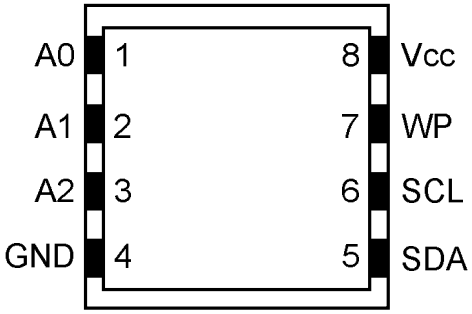

2. Pin Descriptions

The descriptions of the pins are listed in Table 2-1.

Table 2-1. Pin Function Table

Name	8-Lead SOIC	8-Lead TSSOP	8-Pad UDFN(1)	Function
A0(2)	1	1	1	Device Address Input
A1(2)	2	2	2	Device Address Input
A2(2)	3	3	3	Device Address Input
GND	4	4	4	Ground
SDA	5	5	5	Serial Data
SCL	6	6	6	Serial Clock
WP(2)	7	7	7	Write-Protect
V_{CC}	8	8	8	Device Power Supply

Notes:

1. The exposed pad on this package can be connected to GND or left floating.
2. If the A0, A1, A2 or WP pins are not driven, they are internally pulled down to GND. In order to operate in a wide variety of application environments, the pull-down mechanism is intentionally designed to be somewhat strong. Once this pin is biased above the CMOS input buffer's trip point (~0.5 x V_{CC}), the pull-down mechanism disengages. Microchip recommends connecting this pin to a known state whenever possible.

2.1 Device Address Inputs (A0, A1, A2)

The A0, A1 and A2 pins are device address inputs that are hard-wired (directly to GND or to V_{CC}) for compatibility with other two-wire Serial EEPROM devices. When the pins are hard-wired, as many as eight devices may be addressed on a single bus system. A device is selected when a corresponding hardware and software match is true. If these pins are left floating, the A0, A1 and A2 pins will be internally pulled down to GND. However, due to capacitive coupling that may appear in customer applications, Microchip recommends always connecting the address pins to a known state. When using a pull-up resistor, Microchip recommends using 10 kΩ or less.

2.2 Ground

The ground reference for the power supply. GND should be connected to the system ground.

2.3 Serial Data (SDA)

The SDA pin is an open-drain bidirectional input/output pin used to serially transfer data to and from the device. The SDA pin must be pulled high using an external pull-up resistor (not to exceed 10 kΩ in value) and may be wire-ORed with any number of other open-drain or open-collector pins from other devices on the same bus.

2.4 Serial Clock (SCL)

The SCL pin is used to provide a clock to the device and to control the flow of data to and from the device. Command and input data present on the SDA pin is always latched in on the rising edge of SCL, while output data on the SDA pin is clocked out on the falling edge of SCL. The SCL pin must either be forced high when the serial bus is idle or pulled high using an external pull-up resistor.

2.5 Write-Protect (WP)

The write-protect input, when connected to GND, allows normal write operations. When the WP pin is connected directly to V_{CC}, all write operations to the protected memory are inhibited.

If the pin is left floating, the WP pin will be internally pulled down to GND. However, due to capacitive coupling that may appear in customer applications, Microchip recommends always connecting the WP pin to a known state. When using a pull-up resistor, Microchip recommends using 10 kΩ or less.

Table 2-2. Write-Protect

WP Pin Status	Part of the Array Protected
At V_{CC}	Full Array
At GND	Normal Write Operations

2.6 Device Power Supply (V_{CC})

The Device Power Supply (V_{CC}) pin is used to supply the source voltage to the device. Operations at invalid V_{CC} voltages may produce spurious results and should not be attempted.

3. Description

The AT24C128C/AT24C256C provides 131,072/262,144 bits of Serial Electrically Erasable and Programmable Read-Only Memory (EEPROM) organized as 16,384/32,768 words of 8 bits each. This device is optimized for use in many automotive applications where low-power and low-voltage operations are essential. The device is available in space-saving 8-lead SOIC, 8-lead TSSOP and 8-pad UDFN packages. All packages operate from 1.7V to 5.5V for Grade 3 and 2.5V to 5.5V for Grade 1.

3.1 System Configuration Using Two-Wire Serial EEPROMs

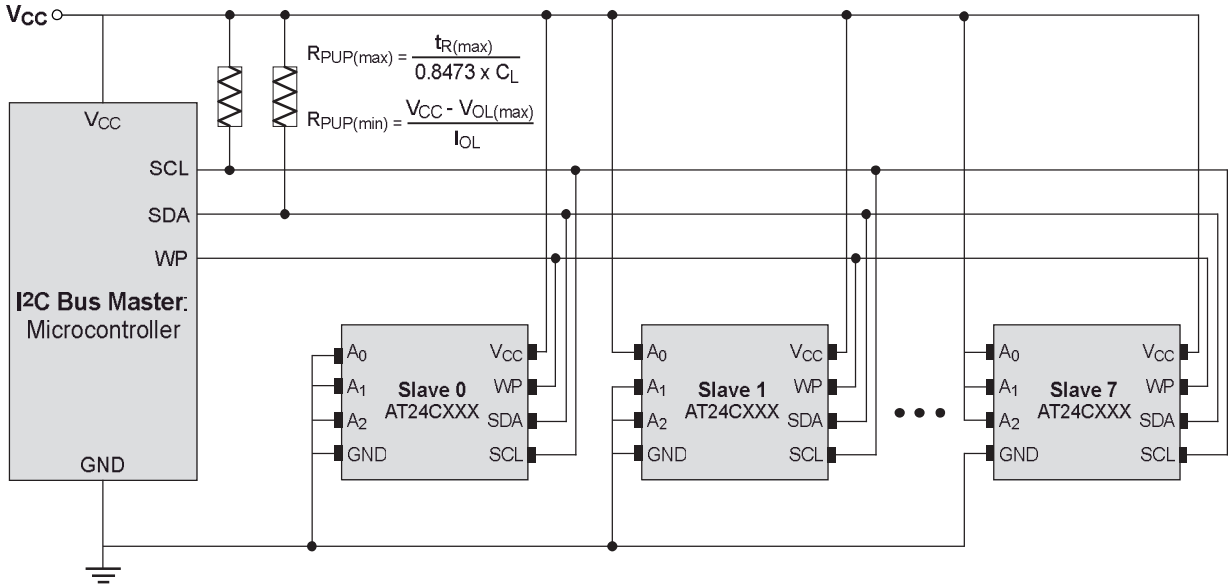

3.2 Block Diagram

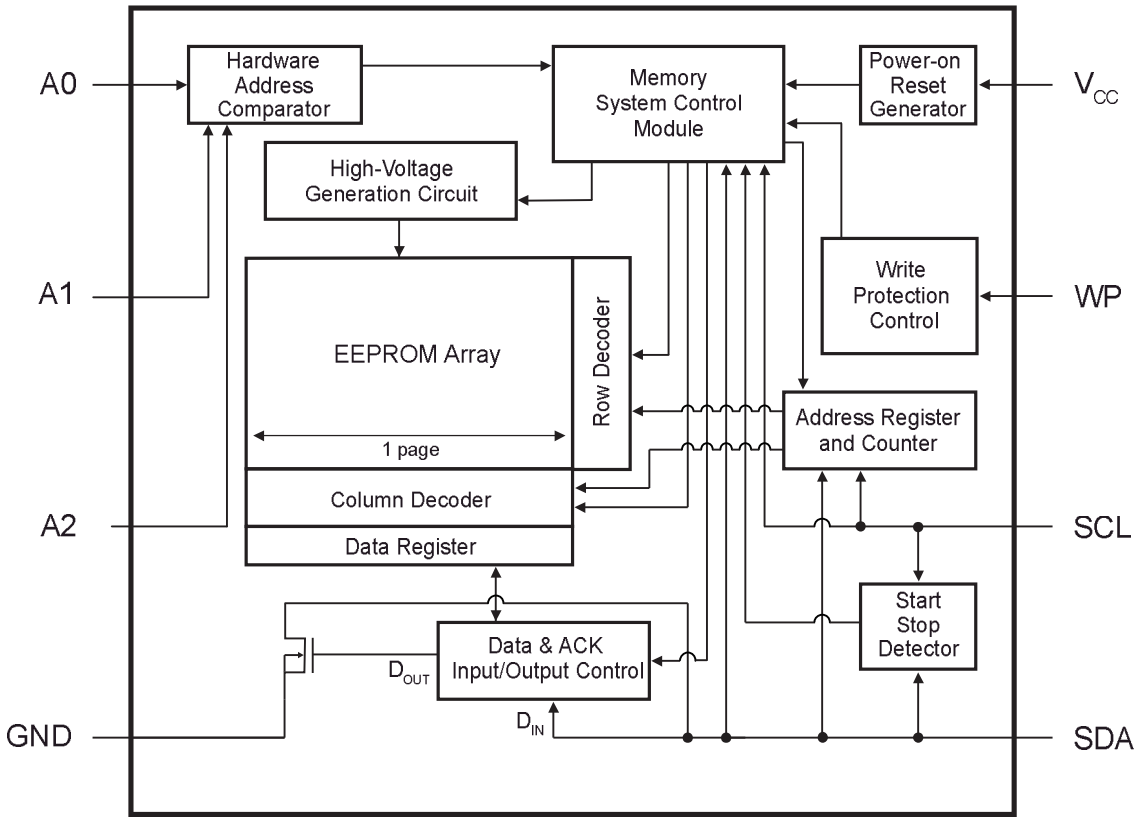

4. Electrical Characteristics

4.1 Absolute Maximum Ratings

Temperature under bias	-55°C to +125°C
Storage temperature	-65°C to +150°C
V_{CC}	6.25V
Voltage on any pin with respect to ground	-1.0V to +7.0V
DC output current	5.0 mA
AT24C128C ESD protection	>3 kV
AT24C256C ESD protection	>4 kV

Note: Stresses above those listed under "Absolute Maximum Ratings" may cause permanent damage to the device. This is a stress rating only and functional operation of the device at these or any other conditions above those indicated in the operation listings of this specification is not implied. Exposure to absolute maximum rating conditions for extended periods may affect device reliability.

4.2 DC and AC Operating Range

Table 4-1. DC and AC Operating Range

AT24C128C/AT24C256C	Automotive Grade 1	Automotive Grade 3
Operating Temperature (Case)	-40°C to +125°C	-40°C to +85°C
V_{CC} Power Supply	2.5V to 5.5V	1.7V to 5.5V

4.3 DC Characteristics

Table 4-2. DC Characteristics

Parameter	Symbol	Minimum	Typical(1)	Maximum	Units	Test Conditions
Supply Voltage	V_{CC1}	2.5	—	5.5	V	Grade 1
	V_{CC2}	1.7	—	5.5	V	Grade 3
Supply Current	I_{CC1}	—	0.4	1.0	mA	V_{CC} = 5.0V, Read at 400 kHz
Supply Current	I_{CC2}	—	2.0	3.0	mA	V_{CC} = 5.0V, Write at 400 kHz
Standby Current	I_{SB}	—	0.1	3.0	µA	V_{CC} = 1.7V, V_{IN} = V_{CC} or GND
		—	1.6	4.0	µA	V_{CC} = 2.5V, V_{IN} = V_{CC} or GND
		—	4.0	6.0	µA	V_{CC} = 5.0V, V_{IN} = V_{CC} or GND
Input Leakage Current	I_{LI}	—	0.10	3.0	µA	V_{IN} = V_{CC} or GND

.....continued

Parameter	Symbol	Minimum	Typical[1]	Maximum	Units	Test Conditions
Output Leakage Current	I_{LO}	—	0.05	3.0	µA	$V_{OUT} = V_{CC}$ or GND
Input Low Level	V_{IL}	-0.6	—	V_{CC} x 0.3	V	Note 2
Input High Level	V_{IH}	V_{CC} x 0.7	—	V_{CC} + 0.5	V	Note 2
Output Low Level	V_{OL1}	—	—	0.2	V	V_{CC} = 1.7V, I_{OL} = 0.15 mA
Output Low Level	V_{OL2}	—	—	0.4	V	V_{CC} = 2.5V, I_{OL} = 2.1 mA

Note:

1. Typical values characterized at T_A = +25°C unless otherwise noted.
2. This parameter is characterized but is not 100% tested in production.

4.4 AC Characteristics

Table 4-3. AC Characteristics[1]

Parameter	Symbol	Min.	Max.	Min.	Max.	Units
Clock Frequency, SCL	f_{SCL}	—	100	—	400	kHz
Clock Pulse Width Low	t_{LOW}	4,700	—	1,200	—	ns
Clock Pulse Width High	t_{HIGH}	4,000	—	600	—	ns
Noise Suppression Time[2]	t_I	—	100	—	50	ns
Clock Low to Data Out Valid	t_{AA}	—	4,500	100	900	ns
Bus Free Time between Stop and Start	t_{BUF}	4,700	—	1,200	—	ns
Start Hold Time	$t_{HD.STA}$	4,000	—	600	—	ns
Start Set-Up Time	$t_{SU.STA}$	4,700	—	600	—	ns
Data In Hold Time	$t_{HD.DAT}$	0	—	0	—	ns
Data In Set-up Time	$t_{SU.DAT}$	200	—	100	—	ns
Inputs Rise Time[3]	t_R	—	1,000	—	300	ns
Inputs Fall Time[3]	t_F	—	300	—	300	ns
Stop Set-Up Time	$t_{SU.STO}$	4,700	—	600	—	ns
Data Out Hold Time	t_{DH}	100	—	50	—	ns
Write Cycle Time	t_{WR}	—	5	—	5	ms

Notes:

1. AC measurement conditions:
   - C_L: 100 pF
   - R_{PUP} (SDA bus line pull-up resistor to V_{CC}): 1.3 kΩ (400 kHz)
   - Input pulse voltages: 0.3 x V_{CC} to 0.7 x V_{CC}
   - Input rise and fall times: ≤50 ns
   - Input and output timing reference voltages: 0.5 x V_{CC}
2. This parameter is characterized and is not 100% tested (T_A = +25°C).
3. These parameters are determined through product characterization and are not 100% tested in production.

Figure 4-1. Bus Timing

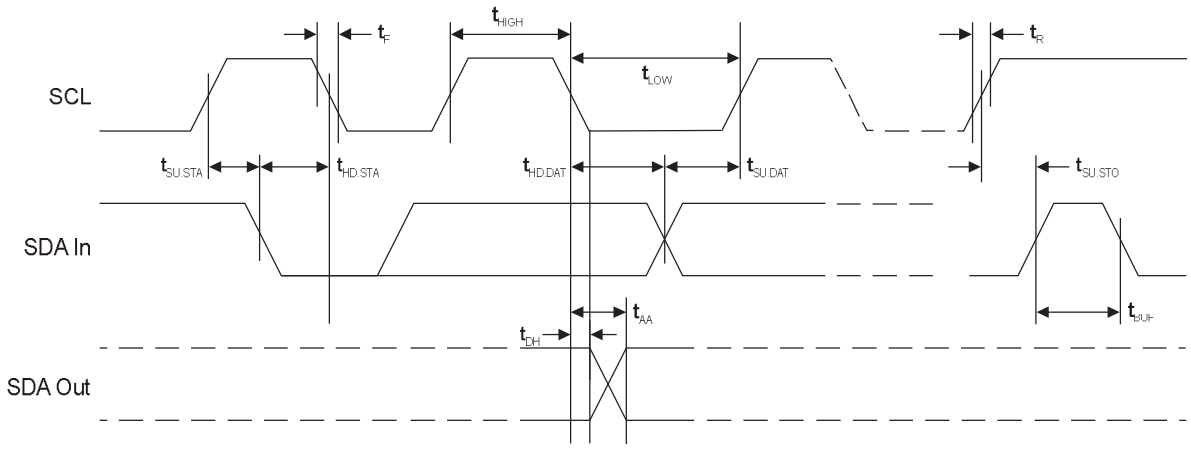

4.5 Electrical Specifications

4.5.1 Power-Up Requirements and Reset Behavior

During a power-up sequence, the V_{CC} supplied to the AT24C128C/AT24C256C should monotonically rise from GND to the minimum V_{CC} level, as specified in Table 4-1, with a slew rate no faster than 0.1 V/µs.

4.5.1.1 Device Reset

To prevent inadvertent write operations or any other spurious events from occurring during a power-up sequence, the AT24C128C/AT24C256C includes a Power-on Reset (POR) circuit. Upon power-up, the device will not respond to any commands until the V_{CC} level crosses the internal voltage threshold (V_{POR}) that brings the device out of Reset and into Standby mode.

The system designer must ensure the instructions are not sent to the device until the V_{CC} supply has reached a stable value greater than or equal to the minimum V_{CC} level. Additionally, once the V_{CC} is greater than or equal to the minimum V_{CC} level, the bus master must wait at least t_{PUP} before sending the first command to the device. See Table 4-4 for the values associated with these power-up parameters.

Table 4-4. Power-up Conditions[(1)]

Symbol	Parameter	Min.	Max.	Units
t_{PUP}	Time required after V_{CC} is stable before the device can accept commands	100	—	µs
V_{POR}	Power-on Reset Threshold Voltage	—	1.5	V
t_{POFF}	Minimum time at V_{CC} = 0V between power cycles	500	—	ms

Note:

1. These parameters are characterized but they are not 100% tested in production.

If an event occurs in the system where the V_{CC} level supplied to the AT24C128C/AT24C256C drops below the maximum V_{POR} level specified, it is recommended that a full power cycle sequence be performed by first driving the V_{CC} pin to GND, waiting at least the minimum t_{POFF} time and then performing a new power-up sequence in compliance with the requirements defined in this section.

4.5.2 Pin Capacitance

Table 4-5. Pin Capacitance[1]

Symbol	Test Condition	Max.	Units	Conditions
$C_{I/O}$	Input/Output Capacitance (SDA)	8	pF	$V_{I/O}$ = 0V
C_{IN}	Input Capacitance (A0, A1, A2 and SCL)	6	pF	V_{IN} = 0V

Note:

1. This parameter is characterized but is not 100% tested in production.

4.5.3 EEPROM Cell Performance Characteristics

Table 4-6. EEPROM Cell Performance Characteristics

Operation	Test Condition	Min.	Max.	Units
Write Endurance[1]	T_A = 25°C, V_{CC} = 5.0V, Page Write mode	1,000,000	—	Write Cycles
Data Retention[1]	T_A = 55°C	100	—	Years

Note:

1. Performance is determined through characterization and the qualification process.

5. Device Operation and Communication

The AT24C128C/AT24C256C operates as a slave device and utilizes a simple I²C-compatible two-wire digital serial interface to communicate with a host controller, commonly referred to as the bus master. The master initiates and controls all read and write operations to the slave devices on the serial bus, and both the master and the slave devices can transmit and receive data on the bus.

The serial interface is comprised of just two signal lines: Serial Clock (SCL) and Serial Data (SDA). The SCL pin is used to receive the clock signal from the master, while the bidirectional SDA pin is used to receive command and data information from the master as well as to send data back to the master. Data is always latched into the AT24C128C/AT24C256C on the rising edge of SCL and always output from the device on the falling edge of SCL. Both the SCL and SDA pins incorporate integrated spike suppression filters and Schmitt Triggers to minimize the effects of input spikes and bus noise.

All command and data information is transferred with the Most Significant bit (MSb) first. During bus communication, one data bit is transmitted every clock cycle, and after eight bits (one byte) of data have been transferred, the receiving device must respond with either an Acknowledge (ACK) or a No-Acknowledge (NACK) response bit during a ninth clock cycle (ACK/NACK clock cycle) generated by the master. Therefore, nine clock cycles are required for every one byte of data transferred. There are no unused clock cycles during any read or write operation, so there must not be any interruptions or breaks in the data stream during each data byte transfer and ACK or NACK clock cycle.

During data transfers, data on the SDA pin must only change while SCL is low, and the data must remain stable while SCL is high. If data on the SDA pin changes while SCL is high, then either a Start or a Stop condition will occur. Start and Stop conditions are used to initiate and end all serial bus communication between the master and the slave devices. The number of data bytes transferred between a Start and a Stop condition is not limited and is determined by the master. In order for the serial bus to be idle, both the SCL and SDA pins must be in the logic high state at the same time.

5.1 Clock and Data Transition Requirements

The SDA pin is an open-drain terminal and therefore must be pulled high with an external pull-up resistor. SCL is an input pin that can either be driven high or pulled high using an external pull-up resistor. Data on the SDA pin may change only during SCL low time periods. Data changes during SCL high periods will indicate a Start or Stop condition as defined below. The relationship of the AC timing parameters with respect to SCL and SDA for the AT24C128C/AT24C256C are shown in the timing waveform in Figure 4-1. The AC timing characteristics and specifications are outlined in AC Characteristics.

5.2 Start and Stop Conditions

5.2.1 Start Condition

A Start condition occurs when there is a high-to-low transition on the SDA pin while the SCL pin is at a stable logic '1' state and will bring the device out of Standby mode. The master uses a Start condition to initiate any data transfer sequence; therefore, every command must begin with a Start condition. The device will continuously monitor the SDA and SCL pins for a Start condition but will not respond unless one is detected. Refer to Figure 5-1 for more details.

5.2.2 Stop Condition

A Stop condition occurs when there is a low-to-high transition on the SDA pin while the SCL pin is stable in the logic '1' state.

The master can use the Stop condition to end a data transfer sequence with the AT24C128C/AT24C256C, which will subsequently return to Standby mode. The master can also utilize a repeated Start condition instead of a Stop condition to end the current data transfer if the master will perform another operation. Refer to Figure 5-1 for more details.

5.3 Acknowledge and No-Acknowledge

After every byte of data is received, the receiving device must confirm to the transmitting device that it has successfully received the data byte by responding with what is known as an Acknowledge (ACK).
An ACK is accomplished by the transmitting device first releasing the SDA line at the falling edge of the eighth clock cycle followed by the receiving device responding with a logic '0' during the entire high period of the ninth clock cycle.

When the AT24C128C/AT24C256C is transmitting data to the master, the master can indicate that it is done receiving data and wants to end the operation by sending a logic '1' response to the AT24C128C/AT24C256C instead of an ACK response during the ninth clock cycle. This is known as a No-Acknowledge (NACK) and is accomplished by the master sending a logic '1' during the ninth clock cycle, at which point the AT24C128C/AT24C256C will release the SDA line so the master can then generate a Stop condition.

The transmitting device, which can be the bus master or the Serial EEPROM, must release the SDA line at the falling edge of the eighth clock cycle to allow the receiving device to drive the SDA line to a logic '0' to ACK the previous 8-bit word. The receiving device must release the SDA line at the end of the ninth clock cycle to allow the transmitter to continue sending new data. A timing diagram has been provided in Figure 5-1 to better illustrate these requirements.

Figure 5-1. Start Condition, Data Transitions, Stop Condition and Acknowledge

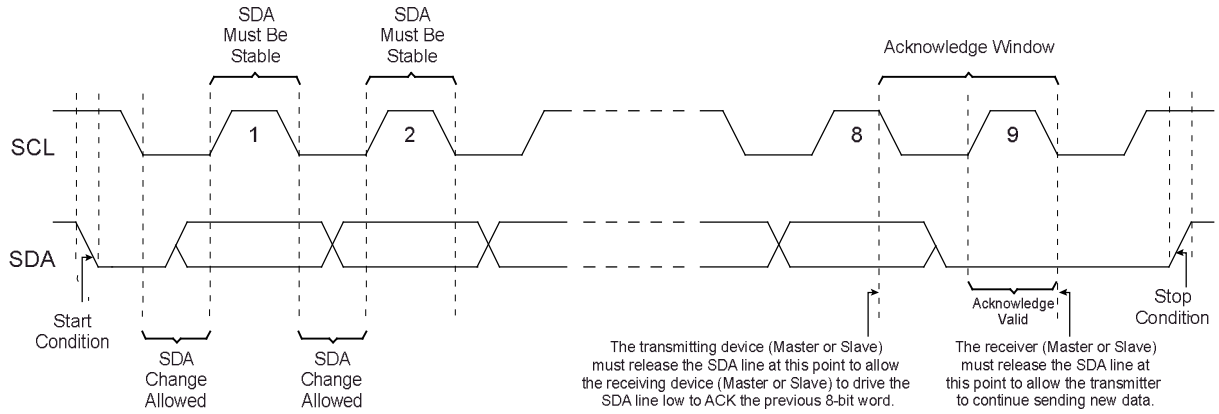

5.4 Standby Mode

The AT24C128C/AT24C256C features a low-power Standby mode that is enabled when any one of the following occurs:

- A valid power-up sequence is performed (see Power-Up Requirements and Reset Behavior).
- A Stop condition is received by the device unless it initiates an internal write cycle (see Write Operations).
- At the completion of an internal write cycle (see Write Operations).

5.5 Software Reset

After an interruption in protocol, power loss or system Reset, any two-wire device can be protocol reset by clocking SCL until SDA is released by the EEPROM and goes high. The number of clock cycles until SDA is released by the EEPROM will vary. The software Reset sequence should not take more than nine dummy clock cycles. Once the software Reset sequence is complete, new protocol can be sent to the device by sending a Start condition followed by the protocol. Refer to Figure 5-2 for an illustration.

Figure 5-2. Software Reset

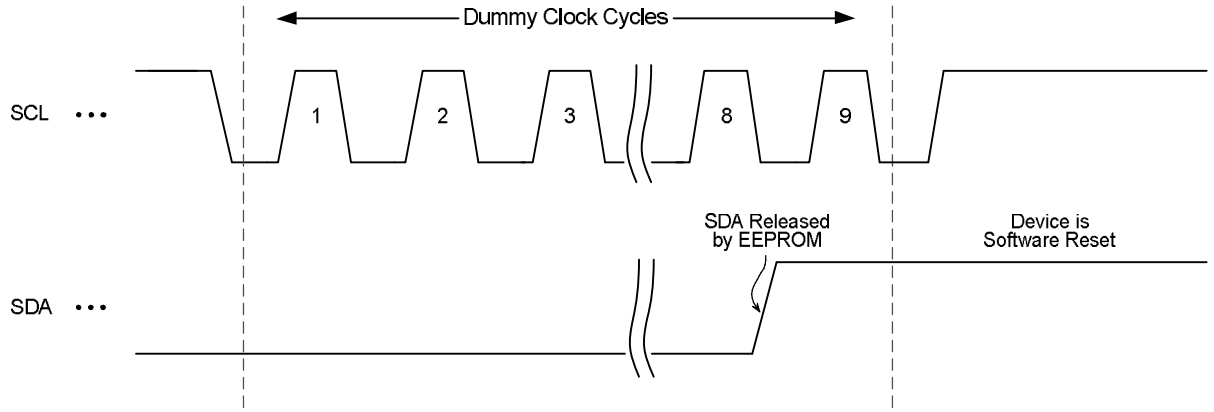

In the event that the device is still non-responsive or remains active on the SDA bus, a power cycle must be used to reset the device (see Power-Up Requirements and Reset Behavior).

6. Memory Organization

The AT24C128C is internally organized as 256 pages of 64 bytes each. The AT24C256C is internally organized as 512 pages of 64 bytes each.

6.1 Device Addressing

Accessing the device requires an 8-bit device address byte following a Start condition to enable the device for a read or write operation. Since multiple slave devices can reside on the serial bus, each slave device must have its own unique address so the master can access each device independently.

The Most Significant four bits of the device address byte is referred to as the device type identifier. The device type identifier '1010' (Ah) is required in bits 7 through 4 of the device address byte (see Table 6-1).

Following the 4-bit device type identifier are the hardware slave address bits, A2, A1 and A0. These bits can be used to expand the address space by allowing up to eight Serial EEPROM devices on the same bus. These hardware slave address bits must correlate with the voltage level on the corresponding hardwired device address input pins A0, A1 and A2. The A0, A1 and A2 pins use an internal proprietary circuit that automatically biases the pin to a logic '0' state if the pin is allowed to float. In order to operate in a wide variety of application environments, the pull-down mechanism is intentionally designed to be somewhat strong. Once the pin is biased above the CMOS input buffer's trip point (~0.5 x V_{CC}), the pull-down mechanism disengages. Microchip recommends connecting the A0, A1 and A2 pins to a known state whenever possible.

The eighth bit (bit 0) of the device address byte is the Read/Write Select bit. A read operation is initiated if this bit is high and a write operation is initiated if this bit is low.

Upon the successful comparison of the device address byte, the AT24C128C/AT24C256C will return an ACK. If a valid comparison is not made, the device will NACK.

Table 6-1. Device Address Byte

Package	Device Type Identifier				Hardware Slave Address Bits			R/$\overline{W}$ Select
	Bit 7	Bit 6	Bit 5	Bit 4	Bit 3	Bit 2	Bit 1	Bit 0
All Package Types	1	0	1	0	A2	A1	A0	R/$\overline{W}$

For all operations except the current address read, two 8-word address bytes must be transmitted to the device immediately following the device address byte. The word address bytes contains a 14-bit (in the case of the AT24C128C) or 15-bit (in the case of the AT24C256C) memory array word address, and are used to specify which byte location in the EEPROM to start reading or writing. Refer to Table 6-2 to review these bit positions.

The first word address byte contains the six Most Significant bits of the word address (A13 through A8) in bit positions five through zero (AT24C128C case) or the seven Most Significant bits of the word address (A14 through A8) in bit positions six through zero (AT24C256C case), as seen in Table 6-2. The remainder of the first word address byte are "don't care" bits (in bit positions seven and six for the AT24C128C, in bit position seven for the AT24C256C) as they are outside of the addressable 128/256 Kbit range. Upon completion of the first word address byte, the AT24C128C/AT24C256C will return an ACK.

Table 6-2. First Word Address Byte

Bit 7	Bit 6	Bit 5	Bit 4	Bit 3	Bit 2	Bit 1	Bit 0
X	A14[1]	A13	A12	A11	A10	A9	A8

Note:

1. Bit 6 is a "don't care" bit on the AT24C128C.

Next, the second word address byte is sent to the device which provides the remaining eight bits of the word address (A7 through A0). Upon completion of the second word address byte, the AT24C128C/AT24C256C will return an ACK. See Table 6-3 to review these bit positions.

Table 6-3. Second Word Address Byte

Bit 7	Bit 6	Bit 5	Bit 4	Bit 3	Bit 2	Bit 1	Bit 0
A7	A6	A5	A4	A3	A2	A1	A0

7. Write Operations

All write operations for the AT24C128C/AT24C256C begin with the master sending a Start condition, followed by a device address byte with the R/$\overline{W}$ bit set to logic '0', and then by the word address byte. The data value(s) to be written to the device immediately follow the word address byte.

7.1 Byte Write

The AT24C128C/AT24C256C supports the writing of a single 8-bit byte. Selecting a data word in the AT24C128C requires a 14-bit word address, while selecting a data word in the AT24C256C requires a 15-bit word address.

Upon receipt of the proper device address and the word address bytes, the EEPROM will send an Acknowledge. The device will then be ready to receive the 8-bit data word. Following receipt of the 8-bit data word, the EEPROM will respond with an ACK. The addressing device, such as a bus master, must then terminate the write operation with a Stop condition. At that time, the EEPROM will enter an internally self-timed write cycle, which will be completed within t_{WR}, while the data word is being programmed into the nonvolatile EEPROM. All inputs are disabled during this write cycle, and the EEPROM will not respond until the write is complete.

Figure 7-1. Byte Write

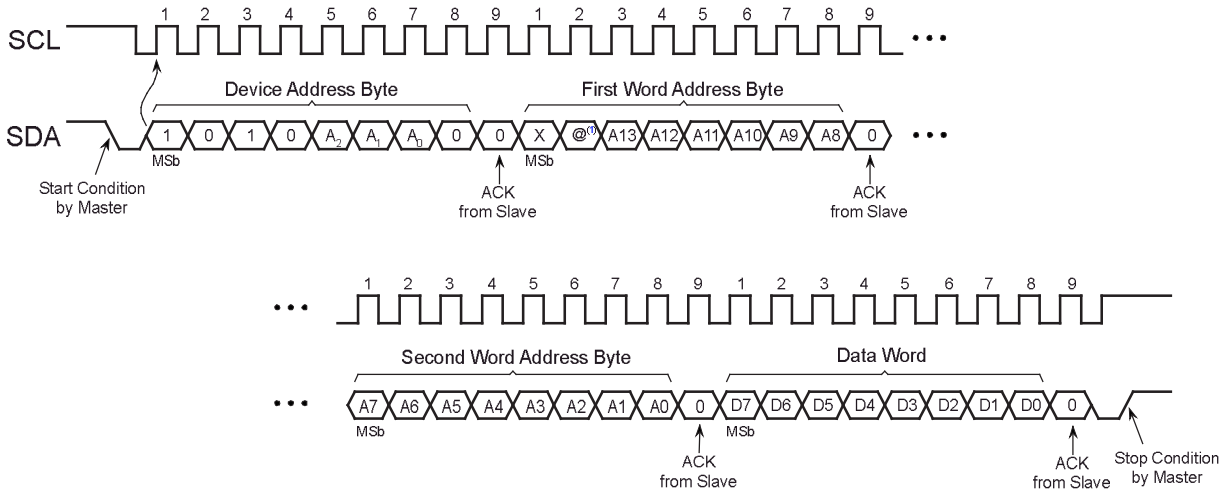

Note:

1. For the AT24C128C, the @ indicates a "don't care" bit. For the AT24C256C, the @ indicates the A14 word address bit.

7.2 Page Write

A page write operation for the AT24C128C and AT24C256C allows up to 64 bytes to be written in the same write cycle, provided all bytes are in the same row of the memory array (where address bits A13/A14 to A6 are the same). Partial page writes of less than 64 bytes are also allowed.

A page write is initiated the same way as a byte write, but the bus master does not send a Stop condition after the first data word is clocked in. Instead, after the EEPROM acknowledges receipt of the first data word, the bus master can transmit up to 63 additional data words. The EEPROM will respond with an ACK after each data word is received. Once all data to be written has been sent to the device, the bus master must issue a Stop condition (see Figure 7-2) at which time the internally self-timed write cycle will begin.

The lower six bits of the word address are internally incremented following the receipt of each data word. The higher order address bits are not incremented and retain the memory page row location. Page write operations are limited to writing bytes within a single physical page, regardless of the number of bytes actually being written. When the incremented word address reaches the page boundary, the address counter will rollover to the beginning of the same

page. Nevertheless, creating a rollover event should be avoided as previously loaded data in the page could become unintentionally altered.

Figure 7-2. Page Write

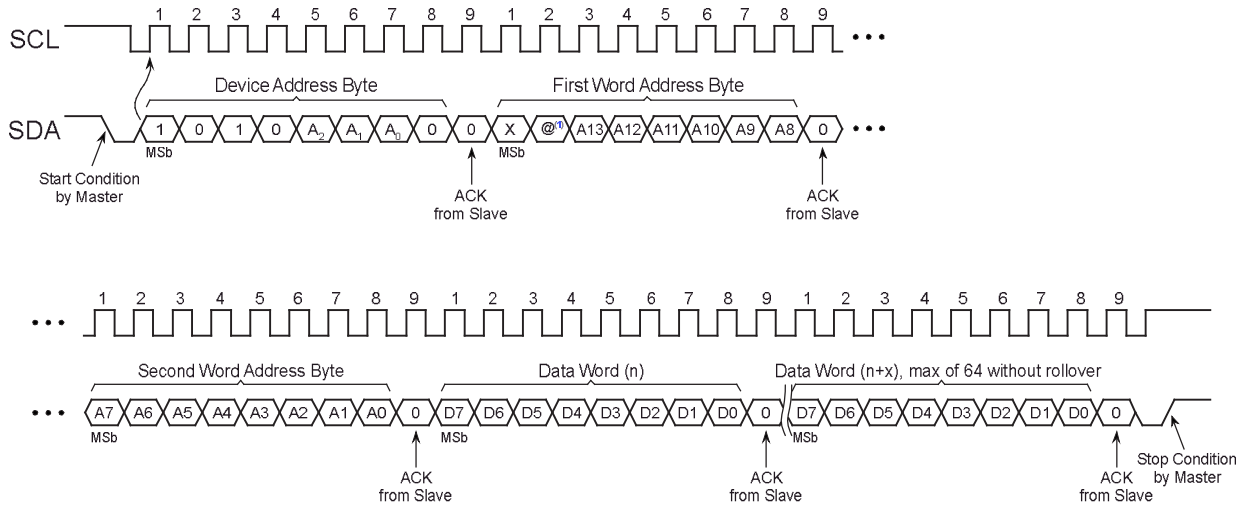

Note:

1. For the AT24C128C, the @ indicates a “don't care” bit. For the AT24C256C, the @ indicates the A14 word address bit.

7.3 Acknowledge Polling

An Acknowledge Polling routine can be implemented to optimize time-sensitive applications that would prefer not to wait the fixed maximum write cycle time (t_{WR}). This method allows the application to know immediately when the Serial EEPROM write cycle has completed, so a subsequent operation can be started.

Once the internally self-timed write cycle has started, an Acknowledge Polling routine can be initiated. This involves repeatedly sending a Start condition followed by a valid device address byte with the R/$\overline{W}$ bit set at logic ‘0’. The device will not respond with an ACK while the write cycle is ongoing. Once the internal write cycle has completed, the EEPROM will respond with an ACK, allowing a new read or write operation to be immediately initiated. A flowchart has been included below in Figure 7-3 to better illustrate this technique.

Figure 7-3. Acknowledge Polling Flowchart

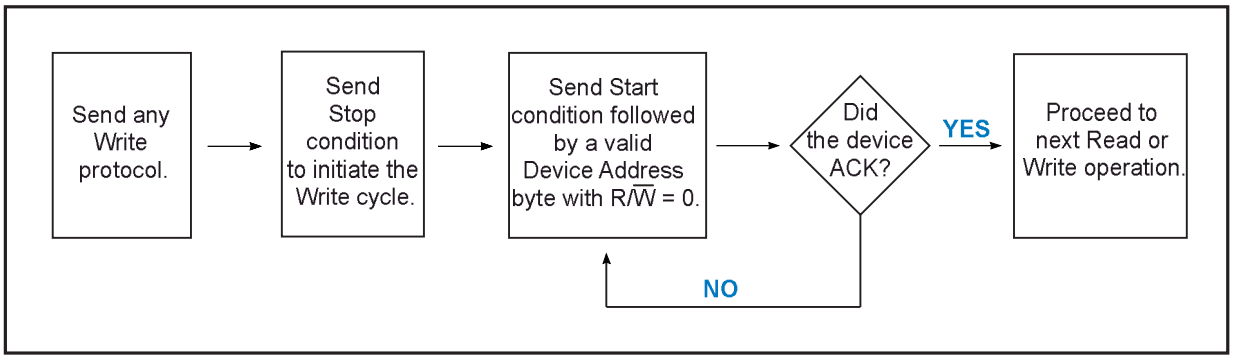

7.4 Write Cycle Timing

The length of the self-timed write cycle (t_{WR}) is defined as the amount of time from the Stop condition that begins the internal write cycle to the Start condition of the first device address byte sent to the AT24C128C/AT24C256C that it

subsequently responds to with an ACK. Figure 7-4 has been included to show this measurement. During the internally self-timed write cycle, any attempts to read from or write to the memory array will not be processed.

Figure 7-4. Write Cycle Timing

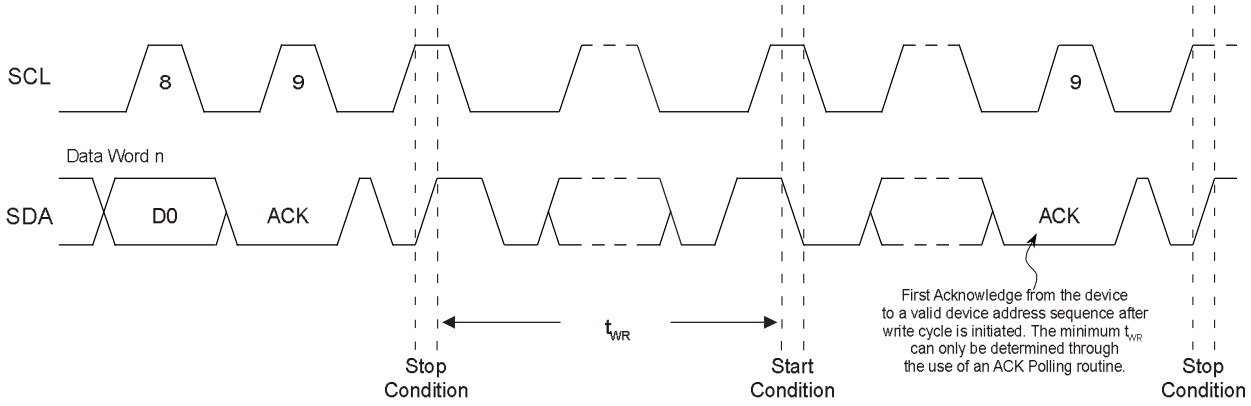

7.5 Write Protection

The AT24C128C/AT24C256C utilizes a hardware data protection scheme that allows the user to write-protect the entire memory array contents when the WP pin is at V_{CC} (or a valid V_{IH}). No write protection will be set if the WP pin is at GND or left floating.

Table 7-1. Write-Protect Behavior

WP Pin Voltage	Part of the Array Protected
V_{CC}	Full Array
GND	None — Write Protection Not Enabled

The status of the WP pin is sampled at the Stop condition for every byte write or page write operation prior to the start of an internally self-timed write cycle. Changing the WP pin state after the Stop condition has been sent will not alter or interrupt the execution of the write cycle.

If an attempt is made to write to the device while the WP pin has been asserted, the device will acknowledge the device address, word address and data bytes, but no write cycle will occur when the Stop condition is issued. The device will immediately be ready to accept a new read or write operation.

8. Read Operations

Read operations are initiated the same way as write operations with the exception that the Read/Write Select bit in the device address byte must be a logic '1'. There are three read operations:

- Current Address Read
- Random Address Read
- Sequential Read

8.1 Current Address Read

The internal data word address counter maintains the last address accessed during the last read or write operation, incremented by one. This address stays valid between operations as long as the V_{CC} is maintained to the part. The address rollover during a read is from the last byte of the last page to the first byte of the first page of the memory.

A current address read operation will output data according to the location of the internal data word address counter. This is initiated with a Start condition, followed by a valid device address byte with the R/$\overline{W}$ bit set to logic '1'. The device will ACK this sequence and the current address data word is serially clocked out on the SDA line. All types of read operations will be terminated if the bus master does not respond with an ACK (it NACKs) during the ninth clock cycle. After the NACK response, the master may send a Stop condition to complete the protocol, or it can send a Start condition to begin the next sequence.

Figure 8-1. Current Address Read

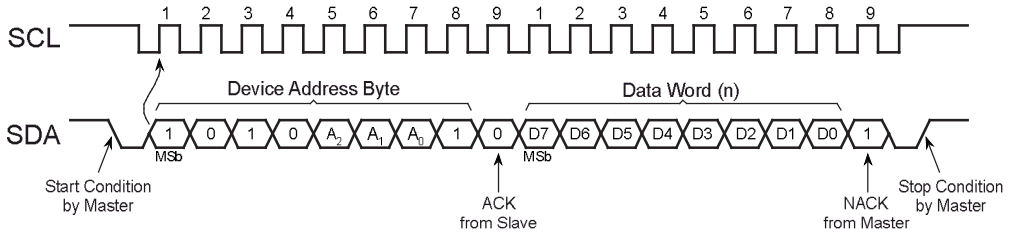

8.2 Random Read

A random read begins in the same way as a byte write operation does to load in a new data word address. This is known as a "dummy write" sequence; however, the data byte and the Stop condition of the byte write must be omitted to prevent the part from entering an internal write cycle. Once the device address and word address are clocked in and acknowledged by the EEPROM, the bus master must generate another Start condition. The bus master now initiates a current address read by sending a Start condition, followed by a valid device address byte with the R/$\overline{W}$ bit set to logic '1'. The EEPROM will ACK the device address and serially clock out the data word on the SDA line. All types of read operations will be terminated if the bus master does not respond with an ACK (it NACKs) during the ninth clock cycle. After the NACK response, the master may send a Stop condition to complete the protocol, or it can send a Start condition to begin the next sequence.

Figure 8-2. Random Read

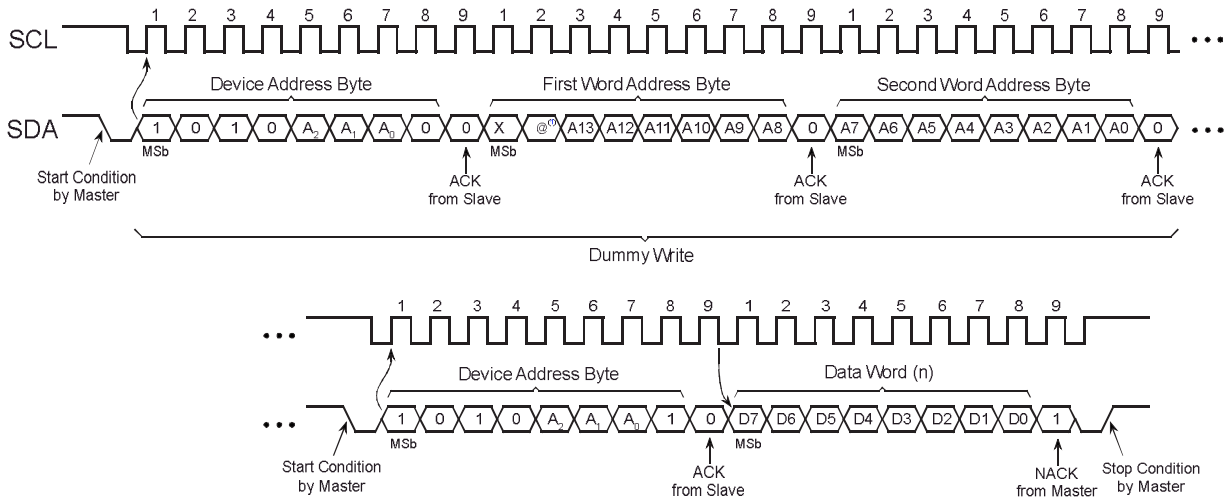

Note:

1. For the AT24C128C, the @ indicates a “don't care” bit. For the AT24C256C, the @ indicates the A14 word address bit.

8.3 Sequential Read

Sequential reads are initiated by either a current address read or a random read. After the bus master receives a data word, it responds with an Acknowledge. As long as the EEPROM receives an ACK, it will continue to increment the word address and serially clock out sequential data words. When the maximum memory address is reached, the data word address will rollover and the sequential read will continue from the beginning of the memory array. All types of read operations will be terminated if the bus master does not respond with an ACK (it NACKs) during the ninth clock cycle. After the NACK response, the master may send a Stop condition to complete the protocol, or it can send a Start condition to begin the next sequence.

Figure 8-3. Sequential Read

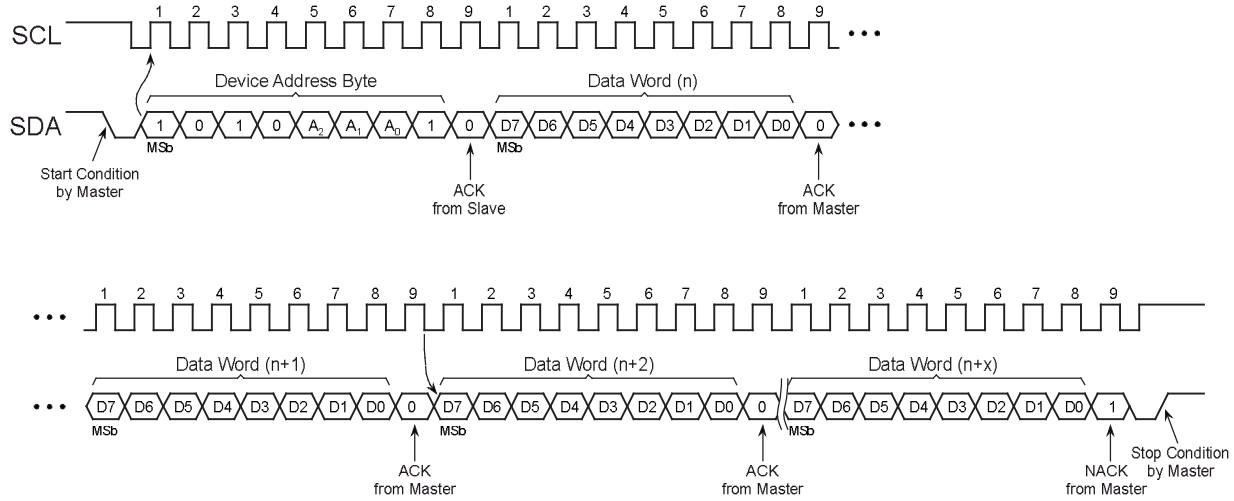

9. Device Default Condition from Microchip

The AT24C128C/AT24C256C is delivered with the EEPROM array set to logic '1', resulting in FFh data in all locations.

10. Packaging Information

10.1 Package Marking Information

AT24C128C and AT24C256C: Package Marking Information

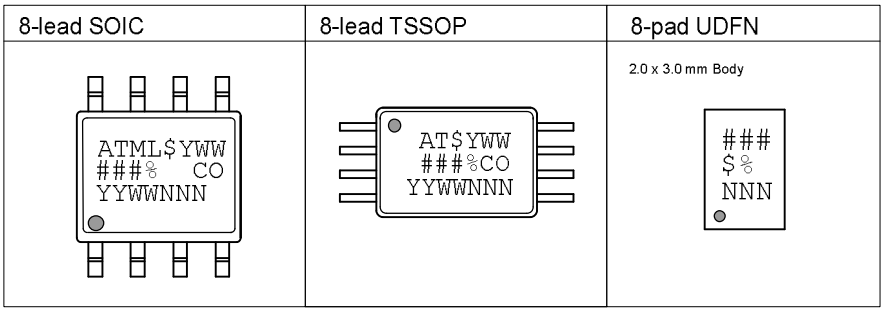

Note 1: ● designates pin 1
Note 2: Package drawings are not to scale

Catalog Number Truncation					
AT24C128C			Truncation Code ###: 2DC		
AT24C256C			Truncation Code ###: 2EC		
Date Codes					**% = Voltages**
YY = Year		Y = Year		WW = Work Week of Assembly	M: 1.7V min
16: 2016	20: 2020	6: 2016	0: 2020	02: Week 2	D: 2.5V min
17: 2017	21: 2021	7: 2017	1: 2021	04: Week 4	
18: 2018	22: 2022	8: 2018	2: 2022	...	
19: 2019	23: 2023	9: 2019	3: 2023	52: Week 52	
Country of Origin		**$ = Device Grade**			**Atmel Truncation**
CO = Country of Origin		P: Automotive Grade 1			AT: Atmel
		9: Automotive Grade 3			ATM: Atmel
					ATML: Atmel
Trace Code					
NNN = Alphanumeric Trace Code (2 Characters for Small Packages)					

8-Lead Plastic Small Outline (SN) - Narrow, 3.90 mm (.150 In.) Body [SOIC]

Note: For the most current package drawings, please see the Microchip Packaging Specification located at http://www.microchip.com/packaging

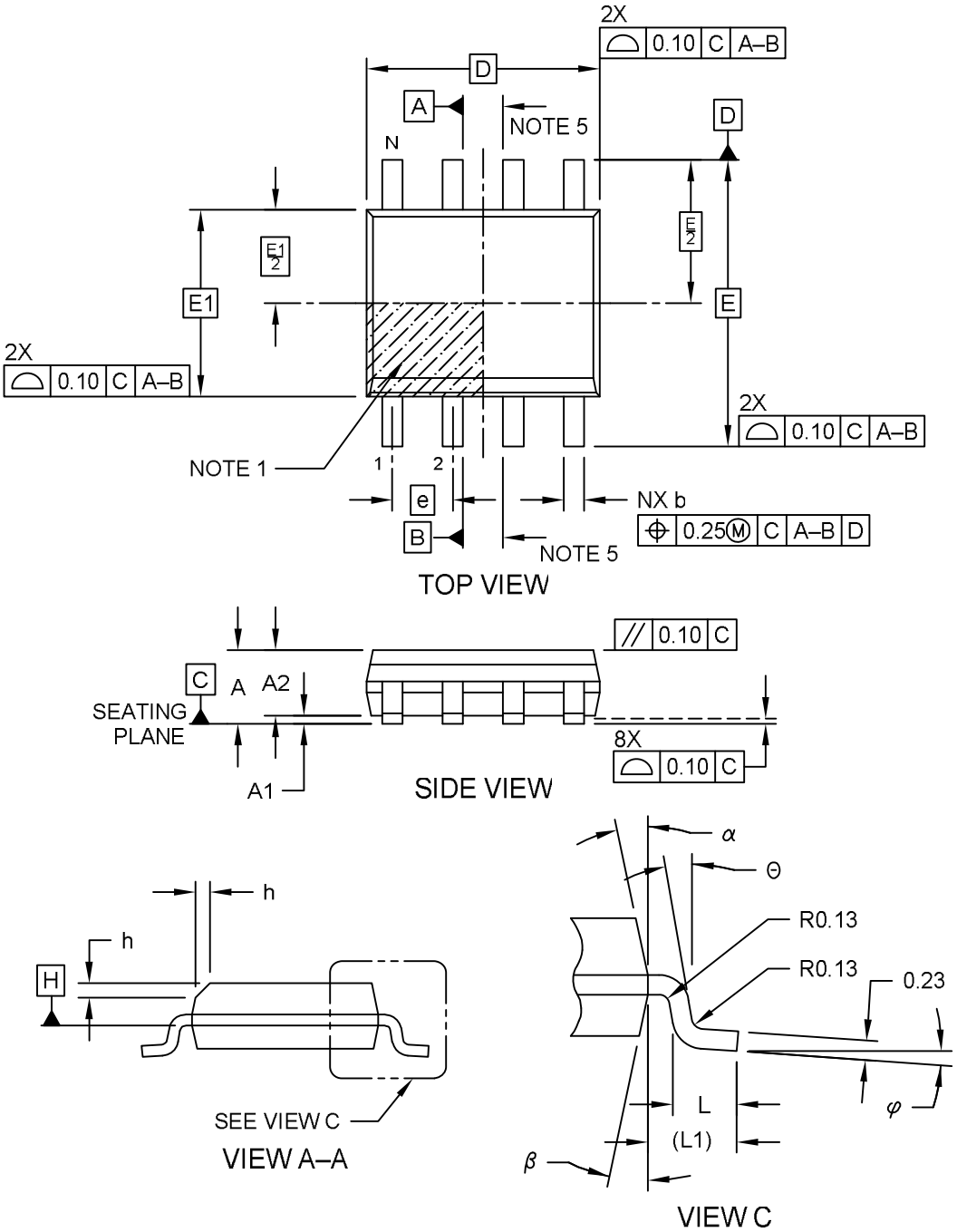

Microchip Technology Drawing No. C04-057-SN Rev F Sheet 1 of 2

8-Lead Plastic Small Outline (SN) - Narrow, 3.90 mm (.150 In.) Body [SOIC]

Note: For the most current package drawings, please see the Microchip Packaging Specification located at http://www.microchip.com/packaging

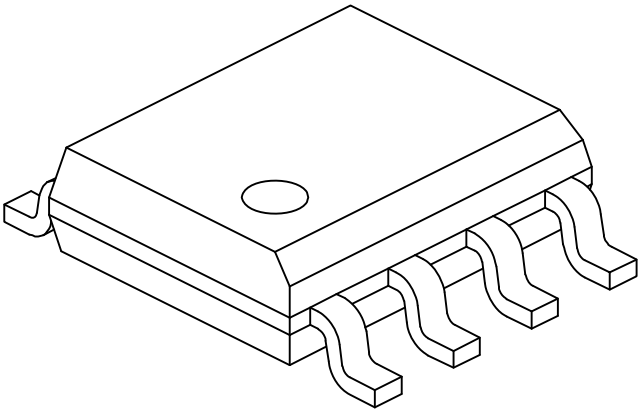

Units		MILLIMETERS		
Dimension Limits		MIN	NOM	MAX
Number of Pins	N	8		
Pitch	e	1.27 BSC		
Overall Height	A	-	-	1.75
Molded Package Thickness	A2	1.25	-	-
Standoff §	A1	0.10	-	0.25
Overall Width	E	6.00 BSC		
Molded Package Width	E1	3.90 BSC		
Overall Length	D	4.90 BSC		
Chamfer (Optional)	h	0.25	-	0.50
Foot Length	L	0.40	-	1.27
Footprint	L1	1.04 REF		
Foot Angle	φ	0°	-	8°
Lead Thickness	c	0.17	-	0.25
Lead Width	b	0.31	-	0.51
Mold Draft Angle Top	α	5°	-	15°
Mold Draft Angle Bottom	β	5°	-	15°

Notes:

1. Pin 1 visual index feature may vary, but must be located within the hatched area.
2. § Significant Characteristic
3. Dimensions D and E1 do not include mold flash or protrusions. Mold flash or protrusions shall not exceed 0.15mm per side.
4. Dimensioning and tolerancing per ASME Y14.5M
   BSC: Basic Dimension. Theoretically exact value shown without tolerances.
   REF: Reference Dimension, usually without tolerance, for information purposes only.
5. Datums A & B to be determined at Datum H.

Microchip Technology Drawing No. C04-057-SN Rev F Sheet 2 of 2

8-Lead Plastic Small Outline (SN) - Narrow, 3.90 mm (.150 In.) Body [SOIC]

Note: For the most current package drawings, please see the Microchip Packaging Specification located at http://www.microchip.com/packaging

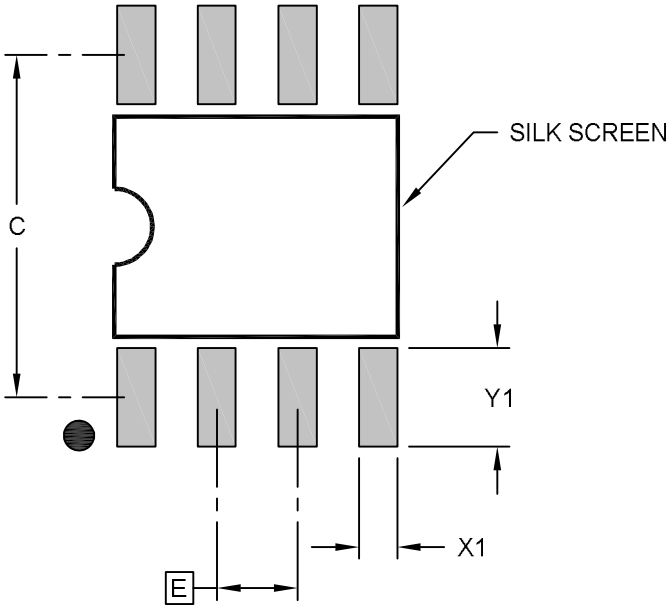

RECOMMENDED LAND PATTERN

Units		MILLIMETERS		
Dimension Limits		MIN	NOM	MAX
Contact Pitch	E	1.27 BSC		
Contact Pad Spacing	C		5.40	
Contact Pad Width (X8)	X1			0.60
Contact Pad Length (X8)	Y1			1.55

Notes:

1. Dimensioning and tolerancing per ASME Y14.5M
   BSC: Basic Dimension. Theoretically exact value shown without tolerances.

Microchip Technology Drawing C04-2057-SN Rev F

8-Lead Plastic Thin Shrink Small Outline (ST) – 4.4 mm Body [TSSOP]

Note: For the most current package drawings, please see the Microchip Packaging Specification located at http://www.microchip.com/packaging

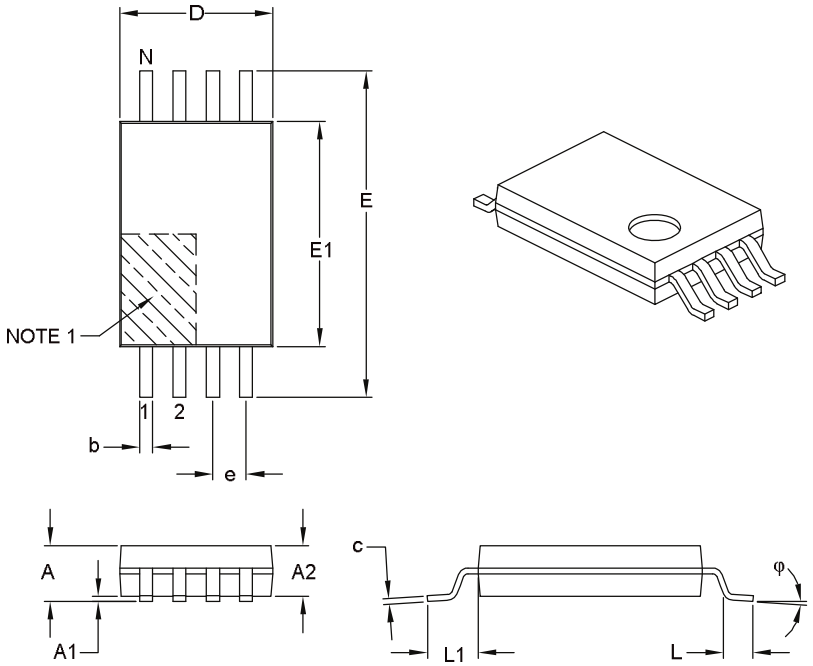

Units		MILLIMETERS		
Dimension Limits		MIN	NOM	MAX
Number of Pins	N	8		
Pitch	e	0.65 BSC		
Overall Height	A	–	–	1.20
Molded Package Thickness	A2	0.80	1.00	1.05
Standoff	A1	0.05	–	0.15
Overall Width	E	6.40 BSC		
Molded Package Width	E1	4.30	4.40	4.50
Molded Package Length	D	2.90	3.00	3.10
Foot Length	L	0.45	0.60	0.75
Footprint	L1	1.00 REF		
Foot Angle	φ	0°	–	8°
Lead Thickness	c	0.09	–	0.20
Lead Width	b	0.19	–	0.30

Notes:
1. Pin 1 visual index feature may vary, but must be located within the hatched area.
2. Dimensions D and E1 do not include mold flash or protrusions. Mold flash or protrusions shall not exceed 0.15 mm per side.
3. Dimensioning and tolerancing per ASME Y14.5M.
   BSC: Basic Dimension. Theoretically exact value shown without tolerances.
   REF: Reference Dimension, usually without tolerance, for information purposes only.

Microchip Technology Drawing C04-086B

8-Lead Plastic Thin Shrink Small Outline (ST) - 4.4 mm Body [TSSOP]

Note: For the most current package drawings, please see the Microchip Packaging Specification located at http://www.microchip.com/packaging

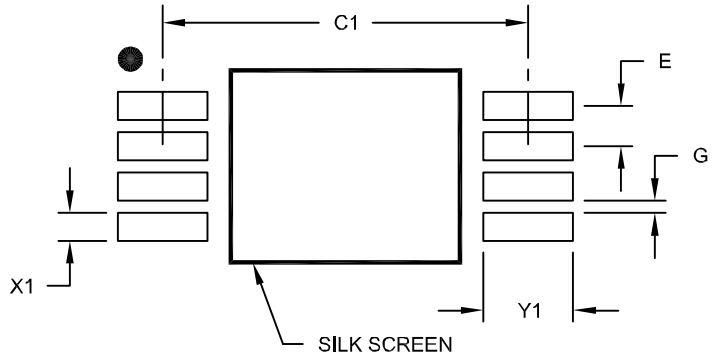

RECOMMENDED LAND PATTERN

Units		MILLIMETERS		
Dimension Limits		MIN	NOM	MAX
Contact Pitch	E		0.65 BSC	
Contact Pad Spacing	C1		5.90	
Contact Pad Width (X8)	X1			0.45
Contact Pad Length (X8)	Y1			1.45
Distance Between Pads	G	0.20		

Notes:

1. Dimensioning and tolerancing per ASME Y14.5M
   BSC: Basic Dimension. Theoretically exact value shown without tolerances.

Microchip Technology Drawing No. C04-2086A

8-Lead Ultra Thin Plastic Dual Flat, No Lead Package (Q4B) - 2x3 mm Body [UDFN] Atmel Legacy Global Package Code YNZ

Note: For the most current package drawings, please see the Microchip Packaging Specification located at http://www.microchip.com/packaging

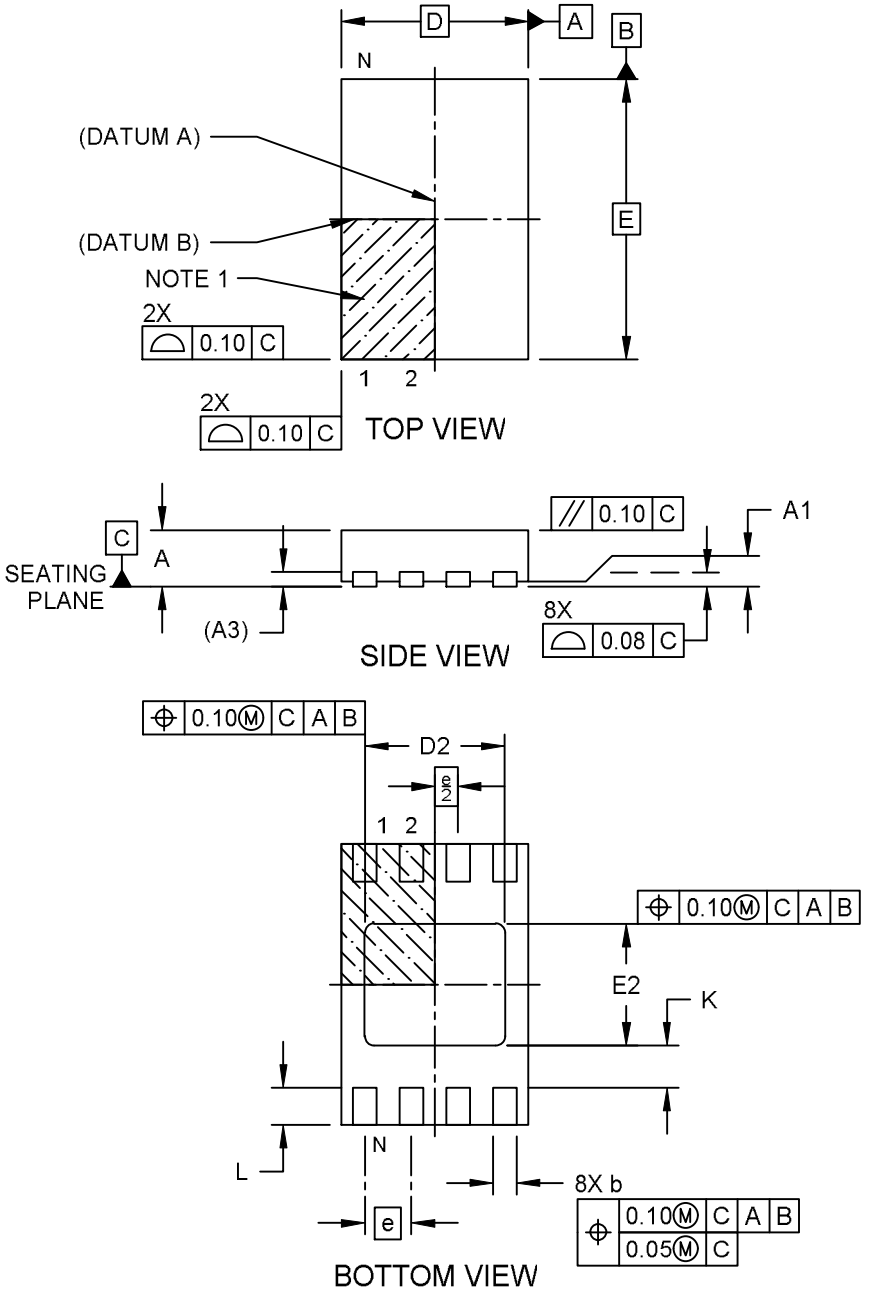

Microchip Technology Drawing C04-21355-Q4B Rev B Sheet 1 of 2

8-Lead Ultra Thin Plastic Dual Flat, No Lead Package (Q4B) - 2x3 mm Body [UDFN] Atmel Legacy Global Package Code YNZ

Note: For the most current package drawings, please see the Microchip Packaging Specification located at http://www.microchip.com/packaging

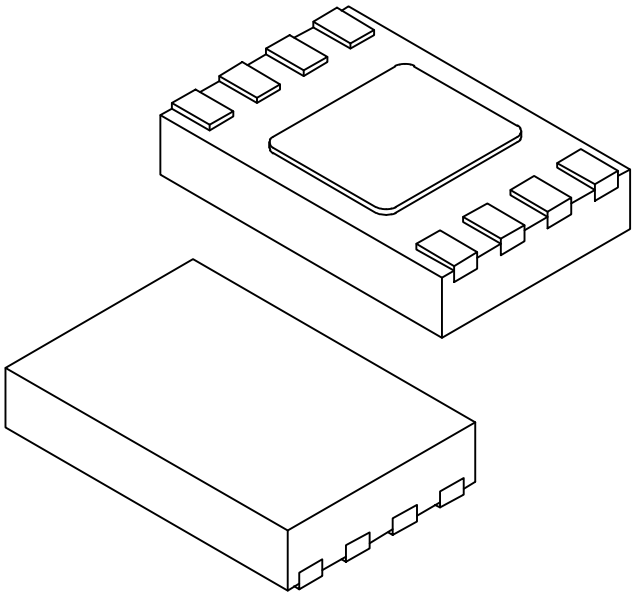

Units		MILLIMETERS		
Dimension Limits		MIN	NOM	MAX
Number of Terminals	N	8		
Pitch	e	0.50 BSC		
Overall Height	A	0.50	0.55	0.60
Standoff	A1	0.00	0.02	0.05
Terminal Thickness	A3	0.152 REF		
Overall Length	D	2.00 BSC		
Exposed Pad Length	D2	1.40	1.50	1.60
Overall Width	E	3.00 BSC		
Exposed Pad Width	E2	1.20	1.30	1.40
Terminal Width	b	0.18	0.25	0.30
Terminal Length	L	0.35	0.40	0.45
Terminal-to-Exposed-Pad	K	0.20	-	-

Notes:

1. Pin 1 visual index feature may vary, but must be located within the hatched area.
2. Package is saw singulated
3. Dimensioning and tolerancing per ASME Y14.5M
   BSC: Basic Dimension. Theoretically exact value shown without tolerances.
   REF: Reference Dimension, usually without tolerance, for information purposes only.

Microchip Technology Drawing C04-21355-Q4B Rev B Sheet 2 of 2

8-Lead Ultra Thin Plastic Dual Flat, No Lead Package (Q4B) - 2x3 mm Body [UDFN] Atmel Legacy Global Package Code YNZ

Note: For the most current package drawings, please see the Microchip Packaging Specification located at http://www.microchip.com/packaging

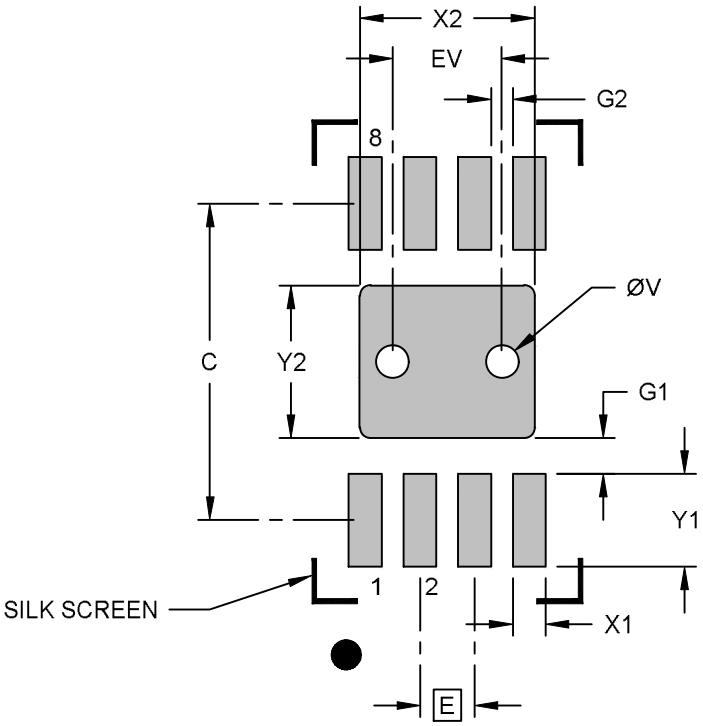

RECOMMENDED LAND PATTERN

Units		MILLIMETERS		
Dimension Limits		MIN	NOM	MAX
Contact Pitch	E		0.50 BSC	
Optional Center Pad Width	X2			1.60
Optional Center Pad Length	Y2			1.40
Contact Pad Spacing	C		2.90	
Contact Pad Width (X8)	X1			0.30
Contact Pad Length (X8)	Y1			0.85
Contact Pad to Center Pad (X8)	G1	0.33		
Contact Pad to Contact Pad (X6)	G2	0.20		
Thermal Via Diameter	V		0.30	
Thermal Via Pitch	EV		1.00	

Notes:

1. Dimensioning and tolerancing per ASME Y14.5M
   BSC: Basic Dimension. Theoretically exact value shown without tolerances.
2. For best soldering results, thermal vias, if used, should be filled or tented to avoid solder loss during reflow process

Microchip Technology Drawing C04-23355-Q4B Rev B

11. Revision History

Revision B (June 2020)
Corrected Product Identification System. Updated UDFN package drawing.

Revision A (November 2019)
Updated to the Microchip template. Microchip DS20006270 replaces Atmel document 8818. Updated Part Marking Information. Updated the “Software Reset” section. Added ESD rating. Removed lead finish designation. Updated trace code format in package markings. Added a figure for “System Configuration Using Two-Wire Serial EEPROMs”. Updated “Block Diagram” figure. Removed the Automotive Grade 2 option. Updated the SOIC, TSSOP and UDFN package drawings to Microchip format.

Atmel Document 8818 Revision C (July 2016)
Added the Automotive Grade 2 and 3 and UDFN options and table of contents. Updated the “Software Reset” section, part marking, 8S1 package drawing, disclaimer page, template and reorganize document.

Atmel Document 8818 Revision B (October 2012)
Removed preliminary status. Updated 8X — TSSOP package drawing. Updated Atmel logos and disclaimer/copy page.

Atmel Document 8818 Revision A (April 2012)
Initial document release.

The Microchip Website

Microchip provides online support via our website at www.microchip.com/. This website is used to make files and information easily available to customers. Some of the content available includes:

- **Product Support** – Data sheets and errata, application notes and sample programs, design resources, user's guides and hardware support documents, latest software releases and archived software
- **General Technical Support** – Frequently Asked Questions (FAQs), technical support requests, online discussion groups, Microchip design partner program member listing
- **Business of Microchip** – Product selector and ordering guides, latest Microchip press releases, listing of seminars and events, listings of Microchip sales offices, distributors and factory representatives

Product Change Notification Service

Microchip's product change notification service helps keep customers current on Microchip products. Subscribers will receive email notification whenever there are changes, updates, revisions or errata related to a specified product family or development tool of interest.

To register, go to www.microchip.com/pcn and follow the registration instructions.

Customer Support

Users of Microchip products can receive assistance through several channels:

- Distributor or Representative
- Local Sales Office
- Embedded Solutions Engineer (ESE)
- Technical Support

Customers should contact their distributor, representative or ESE for support. Local sales offices are also available to help customers. A listing of sales offices and locations is included in this document.

Technical support is available through the website at: www.microchip.com/support

Product Identification System

To order or obtain information, e.g., on pricing or delivery, refer to the factory or the listed sales office.

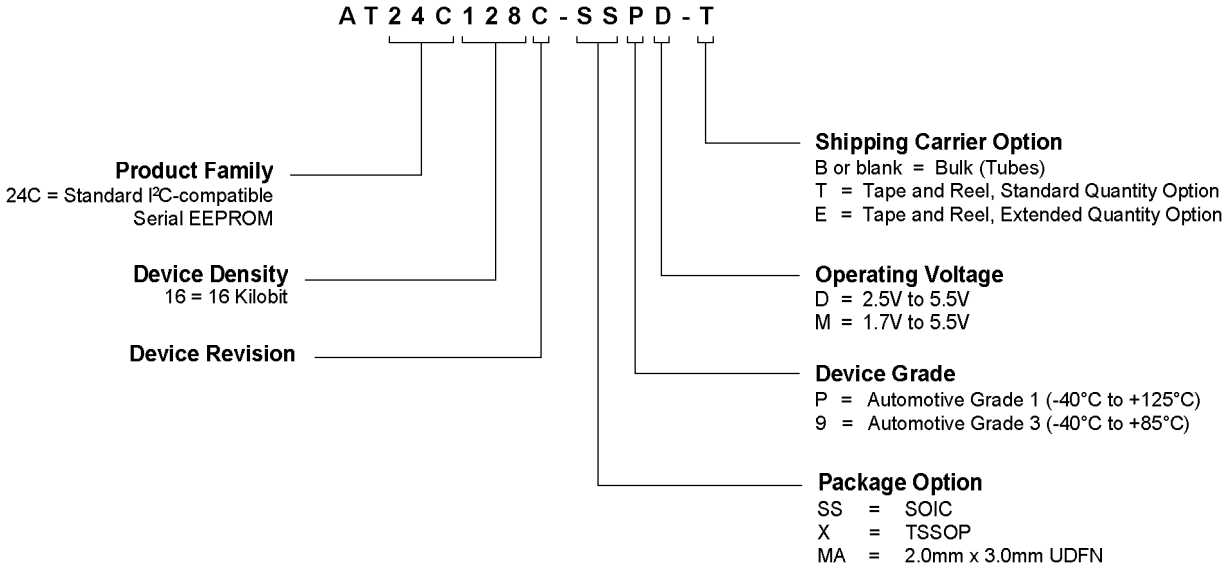

Examples

Device	Package	Package Drawing Code	Package Option	Shipping Carrier Option	Automotive Grade
AT24C128C-SSPD-T	SOIC	SN	SS	Tape and Reel	Grade 1
AT24C128C-SS9M-T	SOIC	SN	SS	Tape and Reel	Grade 3
AT24C256C-SSPD-T	SOIC	SN	SS	Tape and Reel	Grade 1
AT24C256C-SS9M-T	SOIC	SN	SS	Tape and Reel	Grade 3
AT24C128C-XPD-T	TSSOP	ST	X	Tape and Reel	Grade 1
AT24C128C-X9M-T	TSSOP	ST	X	Tape and Reel	Grade 3
AT24C256C-XPD-T	TSSOP	ST	X	Tape and Reel	Grade 1
AT24C256C-X9M-T	TSSOP	ST	X	Tape and Reel	Grade 3
AT24C128C-MAPD-T	UDFN	Q4B	MA	Tape and Reel	Grade 1
AT24C128C-MAPD-E	UDFN	Q4B	MA	Extended Qty. Tape and Reel	Grade 1
AT24C256C-MA9M-T	UDFN	Q4B	MA	Tape and Reel	Grade 3

Microchip Devices Code Protection Feature

Note the following details of the code protection feature on Microchip devices:

- Microchip products meet the specification contained in their particular Microchip Data Sheet.
- Microchip believes that its family of products is one of the most secure families of its kind on the market today, when used in the intended manner and under normal conditions.

- There are dishonest and possibly illegal methods used to breach the code protection feature. All of these methods, to our knowledge, require using the Microchip products in a manner outside the operating specifications contained in Microchip's Data Sheets. Most likely, the person doing so is engaged in theft of intellectual property.
- Microchip is willing to work with the customer who is concerned about the integrity of their code.
- Neither Microchip nor any other semiconductor manufacturer can guarantee the security of their code. Code protection does not mean that we are guaranteeing the product as "unbreakable."

Code protection is constantly evolving. We at Microchip are committed to continuously improving the code protection features of our products. Attempts to break Microchip's code protection feature may be a violation of the Digital Millennium Copyright Act. If such acts allow unauthorized access to your software or other copyrighted work, you may have a right to sue for relief under that Act.

Legal Notice

Information contained in this publication regarding device applications and the like is provided only for your convenience and may be superseded by updates. It is your responsibility to ensure that your application meets with your specifications. MICROCHIP MAKES NO REPRESENTATIONS OR WARRANTIES OF ANY KIND WHETHER EXPRESS OR IMPLIED, WRITTEN OR ORAL, STATUTORY OR OTHERWISE, RELATED TO THE INFORMATION, INCLUDING BUT NOT LIMITED TO ITS CONDITION, QUALITY, PERFORMANCE, MERCHANTABILITY OR FITNESS FOR PURPOSE. Microchip disclaims all liability arising from this information and its use. Use of Microchip devices in life support and/or safety applications is entirely at the buyer's risk, and the buyer agrees to defend, indemnify and hold harmless Microchip from any and all damages, claims, suits, or expenses resulting from such use. No licenses are conveyed, implicitly or otherwise, under any Microchip intellectual property rights unless otherwise stated.

Trademarks

The Microchip name and logo, the Microchip logo, Adaptec, AnyRate, AVR, AVR logo, AVR Freaks, BesTime, BitCloud, chipKIT, chipKIT logo, CryptoMemory, CryptoRF, dsPIC, FlashFlex, flexPWR, HELDO, IGLOO, JukeBlox, KeeLoq, Kleer, LANCheck, LinkMD, maXStylus, maXTouch, MediaLB, megaAVR, Microsemi, Microsemi logo, MOST, MOST logo, MPLAB, OptoLyzer, PackeTime, PIC, picoPower, PICSTART, PIC32 logo, PolarFire, Prochip Designer, QTouch, SAM-BA, SenGenuity, SpyNIC, SST, SST Logo, SuperFlash, Symmetricom, SyncServer, Tachyon, TempTrackr, TimeSource, tinyAVR, UNI/O, Vectron, and XMEGA are registered trademarks of Microchip Technology Incorporated in the U.S.A. and other countries.

APT, ClockWorks, The Embedded Control Solutions Company, EtherSynch, FlashTec, Hyper Speed Control, HyperLight Load, IntelliMOS, Libero, motorBench, mTouch, Powermite 3, Precision Edge, ProASIC, ProASIC Plus, ProASIC Plus logo, Quiet-Wire, SmartFusion, SyncWorld, Temux, TimeCesium, TimeHub, TimePictra, TimeProvider, Vite, WinPath, and ZL are registered trademarks of Microchip Technology Incorporated in the U.S.A.

Adjacent Key Suppression, AKS, Analog-for-the-Digital Age, Any Capacitor, AnyIn, AnyOut, BlueSky, BodyCom, CodeGuard, CryptoAuthentication, CryptoAutomotive, CryptoCompanion, CryptoController, dsPICDEM, dsPICDEM.net, Dynamic Average Matching, DAM, ECAN, EtherGREEN, In-Circuit Serial Programming, ICSP, INICnet, Inter-Chip Connectivity, JitterBlocker, KleerNet, KleerNet logo, memBrain, Mindi, MiWi, MPASM, MPF, MPLAB Certified logo, MPLIB, MPLINK, MultiTRAK, NetDetach, Omniscient Code Generation, PICDEM, PICDEM.net, PICkit, PICtail, PowerSmart, PureSilicon, QMatrix, REAL ICE, Ripple Blocker, SAM-ICE, Serial Quad I/O, SMART-I.S., SQI, SuperSwitcher, SuperSwitcher II, Total Endurance, TSHARC, USBCheck, VariSense, ViewSpan, WiperLock, Wireless DNA, and ZENA are trademarks of Microchip Technology Incorporated in the U.S.A. and other countries.

SQTP is a service mark of Microchip Technology Incorporated in the U.S.A.

The Adaptec logo, Frequency on Demand, Silicon Storage Technology, and Symmcom are registered trademarks of Microchip Technology Inc. in other countries.

GestIC is a registered trademark of Microchip Technology Germany II GmbH & Co. KG, a subsidiary of Microchip Technology Inc., in other countries.

All other trademarks mentioned herein are property of their respective companies.

© 2020, Microchip Technology Incorporated, Printed in the U.S.A., All Rights Reserved.

ISBN: 978-1-5224-6241-5

AMBA, Arm, Arm7, Arm7TDMI, Arm9, Arm11, Artisan, big.LITTLE, Cordio, CoreLink, CoreSight, Cortex, DesignStart, DynamIQ, Jazelle, Keil, Mali, Mbed, Mbed Enabled, NEON, POP, RealView, SecurCore, Socrates, Thumb, TrustZone, ULINK, ULINK2, ULINK-ME, ULINK-PLUS, ULINKpro, µVision, Versatile are trademarks or registered trademarks of Arm Limited (or its subsidiaries) in the US and/or elsewhere.

Quality Management System

For information regarding Microchip's Quality Management Systems, please visit www.microchip.com/quality.

Worldwide Sales and Service

AMERICAS	ASIA/PACIFIC	ASIA/PACIFIC	EUROPE
Corporate Office	**Australia - Sydney**	**India - Bangalore**	**Austria - Wels**
2355 West Chandler Blvd.	Tel: 61-2-9868-6733	Tel: 91-80-3090-4444	Tel: 43-7242-2244-39
Chandler, AZ 85224-6199	**China - Beijing**	**India - New Delhi**	Fax: 43-7242-2244-393
Tel: 480-792-7200	Tel: 86-10-8569-7000	Tel: 91-11-4160-8631	**Denmark - Copenhagen**
Fax: 480-792-7277	**China - Chengdu**	**India - Pune**	Tel: 45-4485-5910
Technical Support:	Tel: 86-28-8665-5511	Tel: 91-20-4121-0141	Fax: 45-4485-2829
www.microchip.com/support	**China - Chongqing**	**Japan - Osaka**	**Finland - Espoo**
Web Address:	Tel: 86-23-8980-9588	Tel: 81-6-6152-7160	Tel: 358-9-4520-820
www.microchip.com	**China - Dongguan**	**Japan - Tokyo**	**France - Paris**
Atlanta	Tel: 86-769-8702-9880	Tel: 81-3-6880- 3770	Tel: 33-1-69-53-63-20
Duluth, GA	**China - Guangzhou**	**Korea - Daegu**	Fax: 33-1-69-30-90-79
Tel: 678-957-9614	Tel: 86-20-8755-8029	Tel: 82-53-744-4301	**Germany - Garching**
Fax: 678-957-1455	**China - Hangzhou**	**Korea - Seoul**	Tel: 49-8931-9700
Austin, TX	Tel: 86-571-8792-8115	Tel: 82-2-554-7200	**Germany - Haan**
Tel: 512-257-3370	**China - Hong Kong SAR**	**Malaysia - Kuala Lumpur**	Tel: 49-2129-3766400
Boston	Tel: 852-2943-5100	Tel: 60-3-7651-7906	**Germany - Heilbronn**
Westborough, MA	**China - Nanjing**	**Malaysia - Penang**	Tel: 49-7131-72400
Tel: 774-760-0087	Tel: 86-25-8473-2460	Tel: 60-4-227-8870	**Germany - Karlsruhe**
Fax: 774-760-0088	**China - Qingdao**	**Philippines - Manila**	Tel: 49-721-625370
Chicago	Tel: 86-532-8502-7355	Tel: 63-2-634-9065	**Germany - Munich**
Itasca, IL	**China - Shanghai**	**Singapore**	Tel: 49-89-627-144-0
Tel: 630-285-0071	Tel: 86-21-3326-8000	Tel: 65-6334-8870	Fax: 49-89-627-144-44
Fax: 630-285-0075	**China - Shenyang**	**Taiwan - Hsin Chu**	**Germany - Rosenheim**
Dallas	Tel: 86-24-2334-2829	Tel: 886-3-577-8366	Tel: 49-8031-354-560
Addison, TX	**China - Shenzhen**	**Taiwan - Kaohsiung**	**Israel - Ra'anana**
Tel: 972-818-7423	Tel: 86-755-8864-2200	Tel: 886-7-213-7830	Tel: 972-9-744-7705
Fax: 972-818-2924	**China - Suzhou**	**Taiwan - Taipei**	**Italy - Milan**
Detroit	Tel: 86-186-6233-1526	Tel: 886-2-2508-8600	Tel: 39-0331-742611
Novi, MI	**China - Wuhan**	**Thailand - Bangkok**	Fax: 39-0331-466781
Tel: 248-848-4000	Tel: 86-27-5980-5300	Tel: 66-2-694-1351	**Italy - Padova**
Houston, TX	**China - Xian**	**Vietnam - Ho Chi Minh**	Tel: 39-049-7625286
Tel: 281-894-5983	Tel: 86-29-8833-7252	Tel: 84-28-5448-2100	**Netherlands - Drunen**
Indianapolis	**China - Xiamen**		Tel: 31-416-690399
Noblesville, IN	Tel: 86-592-2388138		Fax: 31-416-690340
Tel: 317-773-8323	**China - Zhuhai**		**Norway - Trondheim**
Fax: 317-773-5453	Tel: 86-756-3210040		Tel: 47-72884388
Tel: 317-536-2380			**Poland - Warsaw**
Los Angeles			Tel: 48-22-3325737
Mission Viejo, CA			**Romania - Bucharest**
Tel: 949-462-9523			Tel: 40-21-407-87-50
Fax: 949-462-9608			**Spain - Madrid**
Tel: 951-273-7800			Tel: 34-91-708-08-90
Raleigh, NC			Fax: 34-91-708-08-91
Tel: 919-844-7510			**Sweden - Gothenberg**
New York, NY			Tel: 46-31-704-60-40
Tel: 631-435-6000			**Sweden - Stockholm**
San Jose, CA			Tel: 46-8-5090-4654
Tel: 408-735-9110			**UK - Wokingham**
Tel: 408-436-4270			Tel: 44-118-921-5800
Canada - Toronto			Fax: 44-118-921-5820
Tel: 905-695-1980			
Fax: 905-695-2078			

SYST-09NKRH449 - Data Sheet - AT24C128C/AT24C256C Automotive - Complete Datasheet

Affected Catalog Part Numbers(CPN)

AT24C128C-SSHM-B
AT24C128C-SSHM-B
AT24C128C-XHM-B
AT24C128C-XHM-B
AT24C128C-SSHM-B
AT24C128C-SSHM-T
AT24C128C-SSHMAU-T
AT24C128C-SSHM-T-899
AT24C128C-SSHMEU-T
AT24C128C-SSHM-T
AT24C128C-SSHMEU-T
AT24C128C-SSHMGT-T
AT24C128C-SSHM-T-989
AT24C128C-SS9M-T
AT24C128C-SSHMGJ-T
AT24C128C-XHM-T
AT24C128C-XHMAU-T
AT24C128C-XHM-T-834
AT24C128C-XHMEU-T
AT24C128C-XHM-T
AT24C128C-XHMEU-T
AT24C128C-X9M-T
AT24C128C-SSHM-T
AT24C128C-SSHMEU-T
AT24C128C-SSHMGT-T
AT24C128C-SSHM-T-989
AT24C128C-SSHMGJ-T
AT24C128C-MAHM-T
AT24C128C-MAHM-T-834
AT24C128C-MAHMEU-T
AT24C128C-MAHM-T
AT24C128C-MAHM-E
AT24C128C-MAHMML-T
AT24C128C-MAHDHP-T
AT24C128C-MA9M-T
AT24C128C-MA9M-E
AT24C128C-SSPD-T
AT24C128C-SSPD-T
AT24C128C-SSPD-T-35KV01
AT24C128C-XPD-T
AT24C128C-XPD-T
AT24C128C-SSPD-T

AT24C128C-MAPD-T
AT24C128C-MAPD-E
AT24C256C-SSHL-B
AT24C256C-SSHLAU-B
AT24C256C-SSHL-B-899
AT24C256C-SSHL-B
AT24C256C-SSHL-B-923
AT24C256C-SSHLAU-B
AT24C256C-SSHL-B-899
AT24C256C-SSHL-B
AT24C256C-SSHL-B-923
AT24C256C-SSHLNP-B
AT24C256C-XHL-B
AT24C256C-XHL-B
AT24C256C-XHL-B
AT24C256C-SSHL-B
AT24C256C-SSHL-B-923
AT24C256C-SSHL-T
AT24C256C-SSHLEM-T
AT24C256C-SSHL-T-834
AT24C256C-SSHLAU-T
AT24C256C-SSHL-T-899
AT24C256C-SSHLEU-T
AT24C256C-SSHL-T
AT24C256C-SSHLEU-T
AT24C256C-SSHLGT-T
AT24C256C-SSHL-T-989
AT24C256C-SSHLEM-T
AT24C256C-SSHL-T-834
AT24C256C-SSHL-T-537
AT24C256C-SSHLAU-T
AT24C256C-SSHL-T-899
AT24C256C-SSHLEU-T
AT24C256C-SSHL-T
AT24C256C-SSHLEU-T
AT24C256C-SSHLGT-T
AT24C256C-SSHL-T-989
AT24C256C-SSHLEM-T
AT24C256C-SSHL-T-537
AT24C256C-SS9M-T
AT24C256C-SSHLNP-T
AT24C256C-XHL-T
AT24C256C-XHLAU-T
AT24C256C-XHLEU-T
AT24C256C-XHL-T
AT24C256C-XHLEU-T
AT24C256C-XHLAU-T

AT24C256C-XHL-T
AT24C256C-XHLEU-T
AT24C256C-X9M-T
AT24C256C-SSHL-T
AT24C256C-SSHLEU-T
AT24C256C-SSHLGT-T
AT24C256C-SSHL-T-989
AT24C256C-SSHL-T-537
AT24C256C-MAHL-T
AT24C256C-MAHLEU-T
AT24C256C-MAHL-T-899
AT24C256C-MAHLEU-T
AT24C256C-MAHL-T
AT24C256C-MAHL-T-899
AT24C256C-MAHLEU-T
AT24C256C-MAHL-T
AT24C256C-MAHL-E
AT24C256C-MA9M-T
AT24C256C-MA9M-E
AT24C256C-SSPD-T
AT24C256C-SSPD-T
AT24C256C-SSPD-T
AT24C256C-SSPD-T
AT24C256C-XPD-T
AT24C256C-XPD-T
AT24C256C-XPD-T
AT24C256C-MAPD-T
AT24C256C-MAPD-E
AT24C256C-SSHL-B
AT24C256C-SSHLAU-B
AT24C256C-SSHL-B-899
AT24C256C-SSHL-B
AT24C256C-SSHL-B-923
AT24C256C-SSHLAU-B
AT24C256C-SSHL-B-899
AT24C256C-SSHL-B
AT24C256C-SSHL-B-923
AT24C256C-SSHLNP-B
AT24C256C-XHL-B
AT24C256C-XHL-B
AT24C256C-XHL-B
AT24C256C-SSHL-B
AT24C256C-SSHL-B-923
AT24C256C-SSHL-T
AT24C256C-SSHLEM-T
AT24C256C-SSHL-T-834
AT24C256C-SSHLAU-T

AT24C256C-SSHL-T-899
AT24C256C-SSHLEU-T
AT24C256C-SSHL-T
AT24C256C-SSHLEU-T
AT24C256C-SSHLGT-T
AT24C256C-SSHL-T-989
AT24C256C-SSHLEM-T
AT24C256C-SSHL-T-834
AT24C256C-SSHL-T-537
AT24C256C-SSHLAU-T
AT24C256C-SSHL-T-899
AT24C256C-SSHLEU-T
AT24C256C-SSHL-T
AT24C256C-SSHLEU-T
AT24C256C-SSHLGT-T
AT24C256C-SSHL-T-989
AT24C256C-SSHLEM-T
AT24C256C-SSHL-T-537
AT24C256C-SS9M-T
AT24C256C-SSHLNP-T
AT24C256C-XHL-T
AT24C256C-XHLAU-T
AT24C256C-XHLEU-T
AT24C256C-XHL-T
AT24C256C-XHLEU-T
AT24C256C-XHLAU-T
AT24C256C-XHL-T
AT24C256C-XHLEU-T
AT24C256C-X9M-T
AT24C256C-SSHL-T
AT24C256C-SSHLEU-T
AT24C256C-SSHLGT-T
AT24C256C-SSHL-T-989
AT24C256C-SSHL-T-537
AT24C256C-MAHL-T
AT24C256C-MAHLEU-T
AT24C256C-MAHL-T-899
AT24C256C-MAHLEU-T
AT24C256C-MAHL-T
AT24C256C-MAHL-T-899
AT24C256C-MAHLEU-T
AT24C256C-MAHL-T
AT24C256C-MAHL-E
AT24C256C-MA9M-T
AT24C256C-MA9M-E
AT24C256C-SSPD-T
AT24C256C-SSPD-T

AT24C256C-SSPD-T
AT24C256C-SSPD-T
AT24C256C-XPD-T
AT24C256C-XPD-T
AT24C256C-XPD-T
AT24C256C-MAPD-T
AT24C256C-MAPD-E