MCP-AC-20-0008
June. 29, 2020
MCU Device Solution Business Division
IoT and Infrastructure Business Unit Renesas Electronics Co., Ltd.

Renesas Electronics Product Change Notice (PCN)

Subject: Addition of assembly factory and sorting factory, and change of material for RL78

Dear OSC colleague,

Thank you for your cooperation in PCN issues.
Renesas Electronics Corp. would like to hereby request your kind understanding and acceptance for the following addition on above titled matter.

1. Products:

RL78 HWQFN package products

G12 group are integrated into revised P/N that we are guiding in PCN MEPM-AC-15-0009 *[Information about the revised RL78/G12, without restriction on LS (low-speed main) mode]* in February 2016, Technical Update document No.: TN-RL*-A012C/E.

At the same time as this change, we will integrate the P/N for industrial applications.
Please see the P/N reference table for details.

2. Change description:

1) Material: Standard materials are used in new factory.
   1-1) Bonding wire change: from Gold (Au) to Copper (Cu)
   1-2) Lead frame, die mount material and mold resin material change.
2) Factory
   2-1) Assembly factory:
      Current factory: Amkor Technology Japan Kumamoto/Hakodate (ATJ Kumamoto/Hakodate)
      New factory: Powertech Technology Inc., Group_Greatek Electronics Inc., (PTI_Greatek)
   2-2) Sorting factory:
      Current factory: Amkor Technology Japan Kumamoto (ATJ Kumamoto)
      New factory: King Yuan Electronics Co., Ltd (KYEC)
3) Package outline:
   There are changes in some of dimensions.
   The package surface becomes matte but does not affect the reliability.
4) Marking on package
   4-1) Font Change
   4-2) Manufacturing lot number Change (from 9 digit to 7 digit)
   4-3) Delete country of origin indication
5) Packaging material:
   5-1) Tray and the order of devices change
   5-2) Addition of bundling band color (Black)
   5-3) Emboss tape change
   5-4) Reel for emboss taping change
6) Storage condition after opening:
   Current product: Amkor Technology Japan: Within 30°C/ 70%RH/ 168h
   New product: Powertech Technology Inc., Group: Within 30°C/ 60%RH/ 168h
   (JEDEC compliant)
7) Ordering P/N: Please see the P/N reference table for details.
   At the same time as this change, we will integrate the P/N for industrial applications.
   P/N that does not exist in ATJ Kumamoto will not be registered for Rainbow PCN event.

3. Indication:

From the packing label or trace code, we can check the production history data.

4. Schedule:

Shipment will be set 9/1/2020. but we will respond immediately after approval. Please contact the following contacts since it depends on the product group. (The preparation status of the sample varies depending on the P/N. We will respond to your request sequentially, so please contact the following contacts.)

5. Attachments

1) Customer's document: MCP-AC-20-0006
2) Difference material: MCP-AB-20-0061
3) Products list: PN list
4) Reliability Report and QC process flow (It is handled on request by **e-mail**)

6. Request:

1) Please negotiate to get an approval in the *end of July/2020*
   For ROM written products, please perform "Specification change procedure" at Bamboo.
2) Following schedule
   PLP will be switched to new P/N sequentially. For current P/N, after the new P/N is released, we will announce the EOL notification at regular EOL every 6 months. Thank you for your understanding.

7. Contacts:

If you have any inquiries, please inquire of below.

Issue	Divison	Name	TEL	e-MAIL
-Follow up of qualification -Shipping after qualification -Explanation to customer	SCM Demand Planning Division	S.Matsuoka	Ext,:82-3617 Outside call:03-6773-3617	shinobu.matsuoka.yn@renesas.com
		Y.Sato	Ext,:82-3665 Outside call:03-6773-3665	yuichi.sato.xz@renesas.com
		T.Suzuki	Ext,:82-4348 Outside call:03-6773-4348	tomohiro.suzuki.uj@renesas.com
- Request of Reliability report / QC process flow (by e-MAIL) -Specification -Electrical Characteristic	Proprietary MCU Business Division	K.Akiyama	Ext,:8826-5388 Outside call:042-312-5388	keigo.akiyama.xn@renesas.com
		S.Okada	Ext,:8826-5390 Outside call:042-312-5390	shinichi.okada.jg@renesas.com
Individual inquiry about the following contents -QC process flow -Reliability report	Quality Assurance Division	K.Itou	Ext,:8826-7627 Outside call:042-312-7627	katsumi.itou.bx@renesas.com
		N.Sano	Ext,:8826-5725 Outside call:042-312-5725	nobuyasu.sano.yh@renesas.com

Yours faithfully,
MCU Device Solution Business Division
IoT and Infrastructure Business Unit
Renesas Electronics Co., Ltd.

P/N list

P/N before change	P/N after change
R5F1057AANA#U0	R5F1057AANA#20
R5F1057AANA#W0	R5F1057AANA#40
R5F1057AAXXXNA#U0	R5F1057AAXXXNA#20
R5F1057AAXXXNA#W0	R5F1057AAXXXNA#40
R5F1057AGNA#U0	R5F1057AGNA#20
R5F1057AGNA#W0	R5F1057AGNA#40
R5F1057AGXXXNA#U0	R5F1057AGXXXNA#20
R5F1057AGXXXNA#W0	R5F1057AGXXXNA#40
R5F10277ANA#U0	R5F10277ANA#25
R5F10277ANA#U5	R5F10277ANA#25
R5F10277ANA#W0	R5F10277ANA#45
R5F10277ANA#W5	R5F10277ANA#45
R5F10277AXXXNA#U0	R5F10277AXXXNA#25
R5F10277AXXXNA#U5	R5F10277AXXXNA#25
R5F10277AXXXNA#W0	R5F10277AXXXNA#45
R5F10277AXXXNA#W5	R5F10277AXXXNA#45
R5F10277DNA#U0	R5F10277GNA#25
R5F10277DNA#U5	R5F10277GNA#25
R5F10277DNA#W0	R5F10277GNA#45
R5F10277DNA#W5	R5F10277GNA#45
R5F10277DXXXNA#U0	R5F10277GXXXNA#25
R5F10277DXXXNA#U5	R5F10277GXXXNA#25
R5F10277DXXXNA#W0	R5F10277GXXXNA#45
R5F10277DXXXNA#W5	R5F10277GXXXNA#45
R5F10277GNA#U0	R5F10277GNA#25
R5F10277GNA#U5	R5F10277GNA#25
R5F10277GNA#W0	R5F10277GNA#45
R5F10277GNA#W5	R5F10277GNA#45
R5F10277GXXXNA#U0	R5F10277GXXXNA#25
R5F10277GXXXNA#U5	R5F10277GXXXNA#25
R5F10277GXXXNA#W0	R5F10277GXXXNA#45
R5F10277GXXXNA#W5	R5F10277GXXXNA#45
R5F10278ANA#U0	R5F10278ANA#25
R5F10278ANA#U5	R5F10278ANA#25
R5F10278ANA#W0	R5F10278ANA#45
R5F10278ANA#W5	R5F10278ANA#45
R5F10278AXXXNA#U0	R5F10278AXXXNA#25
R5F10278AXXXNA#U5	R5F10278AXXXNA#25
R5F10278AXXXNA#W0	R5F10278AXXXNA#45
R5F10278AXXXNA#W5	R5F10278AXXXNA#45
R5F10278DNA#U0	R5F10278GNA#25
R5F10278DNA#U5	R5F10278GNA#25
R5F10278DNA#W0	R5F10278GNA#45
R5F10278DNA#W5	R5F10278GNA#45
R5F10278DXXXNA#U0	R5F10278GXXXNA#25

R5F10278DXXXNA#U5	R5F10278GXXXNA#25
R5F10278DXXXNA#W0	R5F10278GXXXNA#45
R5F10278DXXXNA#W5	R5F10278GXXXNA#45
R5F10278GNA#U0	R5F10278GNA#25
R5F10278GNA#U5	R5F10278GNA#25
R5F10278GNA#W0	R5F10278GNA#45
R5F10278GNA#W5	R5F10278GNA#45
R5F10278GXXXNA#U0	R5F10278GXXXNA#25
R5F10278GXXXNA#U5	R5F10278GXXXNA#25
R5F10278GXXXNA#W0	R5F10278GXXXNA#45
R5F10278GXXXNA#W5	R5F10278GXXXNA#45
R5F10279ANA#U0	R5F10279ANA#25
R5F10279ANA#U5	R5F10279ANA#25
R5F10279ANA#W0	R5F10279ANA#45
R5F10279ANA#W5	R5F10279ANA#45
R5F10279AXXXNA#U0	R5F10279AXXXNA#25
R5F10279AXXXNA#U5	R5F10279AXXXNA#25
R5F10279AXXXNA#W0	R5F10279AXXXNA#45
R5F10279AXXXNA#W5	R5F10279AXXXNA#45
R5F10279DNA#U0	R5F10279GNA#25
R5F10279DNA#U5	R5F10279GNA#25
R5F10279DNA#W0	R5F10279GNA#45
R5F10279DNA#W5	R5F10279GNA#45
R5F10279DXXXNA#U0	R5F10279GXXXNA#25
R5F10279DXXXNA#U5	R5F10279GXXXNA#25
R5F10279DXXXNA#W0	R5F10279GXXXNA#45
R5F10279DXXXNA#W5	R5F10279GXXXNA#45
R5F10279GNA#U0	R5F10279GNA#25
R5F10279GNA#U5	R5F10279GNA#25
R5F10279GNA#W0	R5F10279GNA#45
R5F10279GNA#W5	R5F10279GNA#45
R5F10279GXXXNA#U0	R5F10279GXXXNA#25
R5F10279GXXXNA#U5	R5F10279GXXXNA#25
R5F10279GXXXNA#W0	R5F10279GXXXNA#45
R5F10279GXXXNA#W5	R5F10279GXXXNA#45
R5F1027AANA#U0	R5F1027AANA#25
R5F1027AANA#U5	R5F1027AANA#25
R5F1027AANA#W0	R5F1027AANA#45
R5F1027AANA#W5	R5F1027AANA#45
R5F1027AAXXXNA#U0	R5F1027AAXXXNA#25
R5F1027AAXXXNA#U5	R5F1027AAXXXNA#25
R5F1027AAXXXNA#W0	R5F1027AAXXXNA#45
R5F1027AAXXXNA#W5	R5F1027AAXXXNA#45
R5F1027ADNA#U0	R5F1027AGNA#25
R5F1027ADNA#U5	R5F1027AGNA#25
R5F1027ADNA#W0	R5F1027AGNA#45
R5F1027ADNA#W5	R5F1027AGNA#45
R5F1027ADXXXNA#U0	R5F1027AGXXXNA#25

R5F1027ADXXXNA#U5	R5F1027AGXXXNA#25
R5F1027ADXXXNA#W0	R5F1027AGXXXNA#45
R5F1027ADXXXNA#W5	R5F1027AGXXXNA#45
R5F1027AGNA#U0	R5F1027AGNA#25
R5F1027AGNA#U5	R5F1027AGNA#25
R5F1027AGNA#W0	R5F1027AGNA#45
R5F1027AGNA#W5	R5F1027AGNA#45
R5F1027AGXXXNA#U0	R5F1027AGXXXNA#25
R5F1027AGXXXNA#U5	R5F1027AGXXXNA#25
R5F1027AGXXXNA#W0	R5F1027AGXXXNA#45
R5F1027AGXXXNA#W5	R5F1027AGXXXNA#45
R5F10377ANA#U0	R5F10377ANA#25
R5F10377ANA#U5	R5F10377ANA#25
R5F10377ANA#W0	R5F10377ANA#45
R5F10377ANA#W5	R5F10377ANA#45
R5F10377AXXXNA#U0	R5F10377AXXXNA#25
R5F10377AXXXNA#U5	R5F10377AXXXNA#25
R5F10377AXXXNA#W0	R5F10377AXXXNA#45
R5F10377AXXXNA#W5	R5F10377AXXXNA#45
R5F10377DNA#U0	R5F10277GNA#25
R5F10377DNA#U5	R5F10277GNA#25
R5F10377DNA#W0	R5F10277GNA#45
R5F10377DNA#W5	R5F10277GNA#45
R5F10377DXXXNA#U0	R5F10277GXXXNA#25
R5F10377DXXXNA#U5	R5F10277GXXXNA#25
R5F10377DXXXNA#W0	R5F10277GXXXNA#45
R5F10377DXXXNA#W5	R5F10277GXXXNA#45
R5F10378ANA#U0	R5F10378ANA#25
R5F10378ANA#U5	R5F10378ANA#25
R5F10378ANA#W0	R5F10378ANA#45
R5F10378ANA#W5	R5F10378ANA#45
R5F10378AXXXNA#U0	R5F10378AXXXNA#25
R5F10378AXXXNA#U5	R5F10378AXXXNA#25
R5F10378AXXXNA#W0	R5F10378AXXXNA#45
R5F10378AXXXNA#W5	R5F10378AXXXNA#45
R5F10378DNA#U0	R5F10278GNA#25
R5F10378DNA#U5	R5F10278GNA#25
R5F10378DNA#W0	R5F10278GNA#45
R5F10378DNA#W5	R5F10278GNA#45
R5F10378DXXXNA#U0	R5F10278GXXXNA#25
R5F10378DXXXNA#U5	R5F10278GXXXNA#25
R5F10378DXXXNA#W0	R5F10278GXXXNA#45
R5F10378DXXXNA#W5	R5F10278GXXXNA#45
R5F10379ANA#U0	R5F10379ANA#25
R5F10379ANA#U5	R5F10379ANA#25
R5F10379ANA#W0	R5F10379ANA#45
R5F10379ANA#W5	R5F10379ANA#45
R5F10379AXXXNA#U0	R5F10379AXXXNA#25

R5F10379AXXXNA#U5	R5F10379AXXXNA#25
R5F10379AXXXNA#W0	R5F10379AXXXNA#45
R5F10379AXXXNA#W5	R5F10379AXXXNA#45
R5F10379DNA#U0	R5F10279GNA#25
R5F10379DNA#U5	R5F10279GNA#25
R5F10379DNA#W0	R5F10279GNA#45
R5F10379DNA#W5	R5F10279GNA#45
R5F10379DXXXNA#U0	R5F10279GXXXNA#25
R5F10379DXXXNA#U5	R5F10279GXXXNA#25
R5F10379DXXXNA#W0	R5F10279GXXXNA#45
R5F10379DXXXNA#W5	R5F10279GXXXNA#45
R5F1037AANA#U0	R5F1037AANA#25
R5F1037AANA#U5	R5F1037AANA#25
R5F1037AANA#W0	R5F1037AANA#45
R5F1037AANA#W5	R5F1037AANA#45
R5F1037AAXXXNA#U0	R5F1037AAXXXNA#25
R5F1037AAXXXNA#U5	R5F1037AAXXXNA#25
R5F1037AAXXXNA#W0	R5F1037AAXXXNA#45
R5F1037AAXXXNA#W5	R5F1037AAXXXNA#45
R5F1037ADNA#U0	R5F1027AGNA#25
R5F1037ADNA#U5	R5F1027AGNA#25
R5F1037ADNA#W0	R5F1027AGNA#45
R5F1037ADNA#W5	R5F1027AGNA#45
R5F1037ADXXXNA#U0	R5F1027AGXXXNA#25
R5F1037ADXXXNA#U5	R5F1027AGXXXNA#25
R5F1037ADXXXNA#W0	R5F1027AGXXXNA#45
R5F1037ADXXXNA#W5	R5F1027AGXXXNA#45
R5F1007AANA#U0	R5F1007AANA#20
R5F1007AANA#W0	R5F1007AANA#40
R5F1007AAXXXNA#U0	R5F1007AAXXXNA#20
R5F1007AAXXXNA#W0	R5F1007AAXXXNA#40
R5F1007ADNA#U0	R5F1007AGNA#20
R5F1007ADNA#W0	R5F1007AGNA#40
R5F1007ADXXXNA#U0	R5F1007AGXXXNA#20
R5F1007ADXXXNA#W0	R5F1007AGXXXNA#40
R5F1007AGNA#U0	R5F1007AGNA#20
R5F1007AGNA#W0	R5F1007AGNA#40
R5F1007AGXXXNA#U0	R5F1007AGXXXNA#20
R5F1007AGXXXNA#W0	R5F1007AGXXXNA#40
R5F1007CANA#U0	R5F1007CANA#20
R5F1007CANA#W0	R5F1007CANA#40
R5F1007CAXXXNA#U0	R5F1007CAXXXNA#20
R5F1007CAXXXNA#W0	R5F1007CAXXXNA#40
R5F1007CDNA#U0	R5F1007CGNA#20
R5F1007CDNA#W0	R5F1007CGNA#40
R5F1007CDXXXNA#U0	R5F1007CGXXXNA#20
R5F1007CDXXXNA#W0	R5F1007CGXXXNA#40
R5F1007CGNA#U0	R5F1007CGNA#20

R5F1007CGNA#W0	R5F1007CGNA#40
R5F1007CGXXXNA#U0	R5F1007CGXXXNA#20
R5F1007CGXXXNA#W0	R5F1007CGXXXNA#40
R5F1007DANA#U0	R5F1007DANA#20
R5F1007DANA#W0	R5F1007DANA#40
R5F1007DAXXXNA#U0	R5F1007DAXXXNA#20
R5F1007DAXXXNA#W0	R5F1007DAXXXNA#40
R5F1007DDNA#U0	R5F1007DGNA#20
R5F1007DDNA#W0	R5F1007DGNA#40
R5F1007DDXXXNA#U0	R5F1007DGXXXNA#20
R5F1007DDXXXNA#W0	R5F1007DGXXXNA#40
R5F1007DGNA#U0	R5F1007DGNA#20
R5F1007DGNA#W0	R5F1007DGNA#40
R5F1007DGXXXNA#U0	R5F1007DGXXXNA#20
R5F1007DGXXXNA#W0	R5F1007DGXXXNA#40
R5F1007EANA#U0	R5F1007EANA#20
R5F1007EANA#W0	R5F1007EANA#40
R5F1007EAXXXNA#U0	R5F1007EAXXXNA#20
R5F1007EAXXXNA#W0	R5F1007EAXXXNA#40
R5F1007EDNA#U0	R5F1007EGNA#20
R5F1007EDNA#W0	R5F1007EGNA#40
R5F1007EDXXXNA#U0	R5F1007EGXXXNA#20
R5F1007EDXXXNA#W0	R5F1007EGXXXNA#40
R5F1007EGNA#U0	R5F1007EGNA#20
R5F1007EGNA#W0	R5F1007EGNA#40
R5F1007EGXXXNA#U0	R5F1007EGXXXNA#20
R5F1007EGXXXNA#W0	R5F1007EGXXXNA#40
R5F1017AANA#U0	R5F1017AANA#20
R5F1017AANA#W0	R5F1017AANA#40
R5F1017AAXXXNA#U0	R5F1017AAXXXNA#20
R5F1017AAXXXNA#W0	R5F1017AAXXXNA#40
R5F1017ADNA#U0	R5F1007AGNA#20
R5F1017ADNA#W0	R5F1007AGNA#40
R5F1017ADXXXNA#U0	R5F1007AGXXXNA#20
R5F1017ADXXXNA#W0	R5F1007AGXXXNA#40
R5F1017CANA#U0	R5F1017CANA#20
R5F1017CANA#W0	R5F1017CANA#40
R5F1017CAXXXNA#U0	R5F1017CAXXXNA#20
R5F1017CAXXXNA#W0	R5F1017CAXXXNA#40
R5F1017CDNA#U0	R5F1007CGNA#20
R5F1017CDNA#W0	R5F1007CGNA#40
R5F1017CDXXXNA#U0	R5F1007CGXXXNA#20
R5F1017CDXXXNA#W0	R5F1007CGXXXNA#40
R5F1017DANA#U0	R5F1017DANA#20
R5F1017DANA#W0	R5F1017DANA#40
R5F1017DAXXXNA#U0	R5F1017DAXXXNA#20
R5F1017DAXXXNA#W0	R5F1017DAXXXNA#40
R5F1017DDNA#U0	R5F1007DGNA#20

R5F1017DDNA#W0	R5F1007DGNA#40
R5F1017DDXXXNA#U0	R5F1007DGXXXNA#20
R5F1017DDXXXNA#W0	R5F1007DGXXXNA#40
R5F1017EANA#U0	R5F1017EANA#20
R5F1017EANA#W0	R5F1017EANA#40
R5F1017EAXXXNA#U0	R5F1017EAXXXNA#20
R5F1017EAXXXNA#W0	R5F1017EAXXXNA#40
R5F1017EDNA#U0	R5F1007EGNA#20
R5F1017EDNA#W0	R5F1007EGNA#40
R5F1017EDXXXNA#U0	R5F1007EGXXXNA#20
R5F1017EDXXXNA#W0	R5F1007EGXXXNA#40
R5F11B7CANA#U0	R5F11B7CANA#20
R5F11B7CANA#W0	R5F11B7CANA#40
R5F11B7CAXXXNA#U0	R5F11B7CAXXXNA#20
R5F11B7CAXXXNA#W0	R5F11B7CAXXXNA#40
R5F11B7CGNA#U0	R5F11B7CGNA#20
R5F11B7CGNA#W0	R5F11B7CGNA#40
R5F11B7CGXXXNA#U0	R5F11B7CGXXXNA#20
R5F11B7CGXXXNA#W0	R5F11B7CGXXXNA#40
R5F11B7EANA#U0	R5F11B7EANA#20
R5F11B7EANA#W0	R5F11B7EANA#40
R5F11B7EAXXXNA#U0	R5F11B7EAXXXNA#20
R5F11B7EAXXXNA#W0	R5F11B7EAXXXNA#40
R5F11B7EGNA#U0	R5F11B7EGNA#20
R5F11B7EGNA#W0	R5F11B7EGNA#40
R5F11B7EGXXXNA#U0	R5F11B7EGXXXNA#20
R5F11B7EGXXXNA#W0	R5F11B7EGXXXNA#40
R5F100BAANA#U0	R5F100BAANA#20
R5F100BAANA#W0	R5F100BAANA#40
R5F100BAAXXXNA#U0	R5F100BAAXXXNA#20
R5F100BAAXXXNA#W0	R5F100BAAXXXNA#40
R5F100BADNA#U0	R5F100BAGNA#20
R5F100BADNA#W0	R5F100BAGNA#40
R5F100BADXXXNA#U0	R5F100BAGXXXNA#20
R5F100BADXXXNA#W0	R5F100BAGXXXNA#40
R5F100BAGNA#U0	R5F100BAGNA#20
R5F100BAGNA#W0	R5F100BAGNA#40
R5F100BAGXXXNA#U0	R5F100BAGXXXNA#20
R5F100BAGXXXNA#W0	R5F100BAGXXXNA#40
R5F100BCANA#U0	R5F100BCANA#20
R5F100BCANA#W0	R5F100BCANA#40
R5F100BCAXXXNA#U0	R5F100BCAXXXNA#20
R5F100BCAXXXNA#W0	R5F100BCAXXXNA#40
R5F100BCDNA#U0	R5F100BCGNA#20
R5F100BCDNA#W0	R5F100BCGNA#40
R5F100BCDXXXNA#U0	R5F100BCGXXXNA#20
R5F100BCDXXXNA#W0	R5F100BCGXXXNA#40
R5F100BCGNA#U0	R5F100BCGNA#20

R5F100BCGNA#W0	R5F100BCGNA#40
R5F100BCGXXXNA#U0	R5F100BCGXXXNA#20
R5F100BCGXXXNA#W0	R5F100BCGXXXNA#40
R5F100BDANA#U0	R5F100BDANA#20
R5F100BDANA#W0	R5F100BDANA#40
R5F100BDAXXXNA#U0	R5F100BDAXXXNA#20
R5F100BDAXXXNA#W0	R5F100BDAXXXNA#40
R5F100BDDNA#U0	R5F100BDGNA#20
R5F100BDDNA#W0	R5F100BDGNA#40
R5F100BDDXXXNA#U0	R5F100BDGXXXNA#20
R5F100BDDXXXNA#W0	R5F100BDGXXXNA#40
R5F100BDGNA#U0	R5F100BDGNA#20
R5F100BDGNA#W0	R5F100BDGNA#40
R5F100BDGXXXNA#U0	R5F100BDGXXXNA#20
R5F100BDGXXXNA#W0	R5F100BDGXXXNA#40
R5F100BEANA#U0	R5F100BEANA#20
R5F100BEANA#W0	R5F100BEANA#40
R5F100BEAXXXNA#U0	R5F100BEAXXXNA#20
R5F100BEAXXXNA#W0	R5F100BEAXXXNA#40
R5F100BEDNA#U0	R5F100BEGNA#20
R5F100BEDNA#W0	R5F100BEGNA#40
R5F100BEDXXXNA#U0	R5F100BEGXXXNA#20
R5F100BEDXXXNA#W0	R5F100BEGXXXNA#40
R5F100BEGNA#U0	R5F100BEGNA#20
R5F100BEGNA#W0	R5F100BEGNA#40
R5F100BEGXXXNA#U0	R5F100BEGXXXNA#20
R5F100BEGXXXNA#W0	R5F100BEGXXXNA#40
R5F101BAANA#U0	R5F101BAANA#20
R5F101BAANA#W0	R5F101BAANA#40
R5F101BAAXXXNA#U0	R5F101BAAXXXNA#20
R5F101BAAXXXNA#W0	R5F101BAAXXXNA#40
R5F101BADNA#U0	R5F100BAGNA#20
R5F101BADNA#W0	R5F100BAGNA#40
R5F101BADXXXNA#U0	R5F100BAGXXXNA#20
R5F101BADXXXNA#W0	R5F100BAGXXXNA#40
R5F101BCANA#U0	R5F101BCANA#20
R5F101BCANA#W0	R5F101BCANA#40
R5F101BCAXXXNA#U0	R5F101BCAXXXNA#20
R5F101BCAXXXNA#W0	R5F101BCAXXXNA#40
R5F101BCDNA#U0	R5F100BCGNA#20
R5F101BCDNA#W0	R5F100BCGNA#40
R5F101BCDXXXNA#U0	R5F100BCGXXXNA#20
R5F101BCDXXXNA#W0	R5F100BCGXXXNA#40
R5F101BDANA#U0	R5F101BDANA#20
R5F101BDANA#W0	R5F101BDANA#40
R5F101BDAXXXNA#U0	R5F101BDAXXXNA#20
R5F101BDAXXXNA#W0	R5F101BDAXXXNA#40
R5F101BDDNA#U0	R5F100BDGNA#20

R5F101BDDNA#W0	R5F100BDGNA#40
R5F101BDDXXXNA#U0	R5F100BDGXXXNA#20
R5F101BDDXXXNA#W0	R5F100BDGXXXNA#40
R5F101BEANA#U0	R5F101BEANA#20
R5F101BEANA#W0	R5F101BEANA#40
R5F101BEAXXXNA#U0	R5F101BEAXXXNA#20
R5F101BEAXXXNA#W0	R5F101BEAXXXNA#40
R5F101BEDNA#U0	R5F100BEGNA#20
R5F101BEDNA#W0	R5F100BEGNA#40
R5F101BEDXXXNA#U0	R5F100BEGXXXNA#20
R5F101BEDXXXNA#W0	R5F100BEGXXXNA#40
R5F100BFANA#U0	R5F100BFANA#20
R5F100BFANA#W0	R5F100BFANA#40
R5F100BFAXXXNA#U0	R5F100BFAXXXNA#20
R5F100BFAXXXNA#W0	R5F100BFAXXXNA#40
R5F100BFDNA#U0	R5F100BFGNA#20
R5F100BFDNA#W0	R5F100BFGNA#40
R5F100BFDXXXNA#U0	R5F100BFGXXXNA#20
R5F100BFDXXXNA#W0	R5F100BFGXXXNA#40
R5F100BFGNA#U0	R5F100BFGNA#20
R5F100BFGNA#W0	R5F100BFGNA#40
R5F100BFGXXXNA#U0	R5F100BFGXXXNA#20
R5F100BFGXXXNA#W0	R5F100BFGXXXNA#40
R5F100BGANA#U0	R5F100BGANA#20
R5F100BGANA#W0	R5F100BGANA#40
R5F100BGAXXXNA#U0	R5F100BGAXXXNA#20
R5F100BGAXXXNA#W0	R5F100BGAXXXNA#40
R5F100BGDNA#U0	R5F100BGGNA#20
R5F100BGDNA#W0	R5F100BGGNA#40
R5F100BGDXXXNA#U0	R5F100BGGXXXNA#20
R5F100BGDXXXNA#W0	R5F100BGGXXXNA#40
R5F100BGGNA#U0	R5F100BGGNA#20
R5F100BGGNA#W0	R5F100BGGNA#40
R5F100BGGXXXNA#U0	R5F100BGGXXXNA#20
R5F100BGGXXXNA#W0	R5F100BGGXXXNA#40
R5F101BFANA#U0	R5F101BFANA#20
R5F101BFANA#W0	R5F101BFANA#40
R5F101BFAXXXNA#U0	R5F101BFAXXXNA#20
R5F101BFAXXXNA#W0	R5F101BFAXXXNA#40
R5F101BFDNA#U0	R5F100BFGNA#20
R5F101BFDNA#W0	R5F100BFGNA#40
R5F101BFDXXXNA#U0	R5F100BFGXXXNA#20
R5F101BFDXXXNA#W0	R5F100BFGXXXNA#40
R5F101BGANA#U0	R5F101BGANA#20
R5F101BGANA#W0	R5F101BGANA#40
R5F101BGAXXXNA#U0	R5F101BGAXXXNA#20
R5F101BGAXXXNA#W0	R5F101BGAXXXNA#40
R5F101BGDNA#U0	R5F100BGGNA#20

R5F101BGDNA#W0	R5F100BGGNA#40
R5F101BGDXXXNA#U0	R5F100BGGXXXNA#20
R5F101BGDXXXNA#W0	R5F100BGGXXXNA#40
R5F104BAANA#U0	R5F104BAANA#20
R5F104BAANA#W0	R5F104BAANA#40
R5F104BAAXXXNA#U0	R5F104BAAXXXNA#20
R5F104BAAXXXNA#W0	R5F104BAAXXXNA#40
R5F104BADNA#U0	R5F104BAGNA#20
R5F104BADNA#W0	R5F104BAGNA#40
R5F104BADXXXNA#U0	R5F104BAGXXXNA#20
R5F104BADXXXNA#W0	R5F104BAGXXXNA#40
R5F104BAGNA#U0	R5F104BAGNA#20
R5F104BAGNA#W0	R5F104BAGNA#40
R5F104BAGXXXNA#U0	R5F104BAGXXXNA#20
R5F104BAGXXXNA#W0	R5F104BAGXXXNA#40
R5F104BCANA#U0	R5F104BCANA#20
R5F104BCANA#W0	R5F104BCANA#40
R5F104BCAXXXNA#U0	R5F104BCAXXXNA#20
R5F104BCAXXXNA#W0	R5F104BCAXXXNA#40
R5F104BCDNA#U0	R5F104BCGNA#20
R5F104BCDNA#W0	R5F104BCGNA#40
R5F104BCDXXXNA#U0	R5F104BCGXXXNA#20
R5F104BCDXXXNA#W0	R5F104BCGXXXNA#40
R5F104BCGNA#U0	R5F104BCGNA#20
R5F104BCGNA#W0	R5F104BCGNA#40
R5F104BCGXXXNA#U0	R5F104BCGXXXNA#20
R5F104BCGXXXNA#W0	R5F104BCGXXXNA#40
R5F104BDANA#U0	R5F104BDANA#20
R5F104BDANA#W0	R5F104BDANA#40
R5F104BDAXXXNA#U0	R5F104BDAXXXNA#20
R5F104BDAXXXNA#W0	R5F104BDAXXXNA#40
R5F104BDDNA#U0	R5F104BDGNA#20
R5F104BDDNA#W0	R5F104BDGNA#40
R5F104BDDXXXNA#U0	R5F104BDGXXXNA#20
R5F104BDDXXXNA#W0	R5F104BDGXXXNA#40
R5F104BDGNA#U0	R5F104BDGNA#20
R5F104BDGNA#W0	R5F104BDGNA#40
R5F104BDGXXXNA#U0	R5F104BDGXXXNA#20
R5F104BDGXXXNA#W0	R5F104BDGXXXNA#40
R5F104BEANA#U0	R5F104BEANA#20
R5F104BEANA#W0	R5F104BEANA#40
R5F104BEAXXXNA#U0	R5F104BEAXXXNA#20
R5F104BEAXXXNA#W0	R5F104BEAXXXNA#40
R5F104BEDNA#U0	R5F104BEGNA#20
R5F104BEDNA#W0	R5F104BEGNA#40
R5F104BEDXXXNA#U0	R5F104BEGXXXNA#20
R5F104BEDXXXNA#W0	R5F104BEGXXXNA#40
R5F104BEGNA#U0	R5F104BEGNA#20

R5F104BEGNA#W0	R5F104BEGNA#40
R5F104BEGXXXNA#U0	R5F104BEGXXXNA#20
R5F104BEGXXXNA#W0	R5F104BEGXXXNA#40
R5F104BFANA#U0	R5F104BFANA#20
R5F104BFANA#W0	R5F104BFANA#40
R5F104BFAXXXNA#U0	R5F104BFAXXXNA#20
R5F104BFAXXXNA#W0	R5F104BFAXXXNA#40
R5F104BFDNA#U0	R5F104BFGNA#20
R5F104BFDNA#W0	R5F104BFGNA#40
R5F104BFDXXXNA#U0	R5F104BFGXXXNA#20
R5F104BFDXXXNA#W0	R5F104BFGXXXNA#40
R5F104BFGNA#U0	R5F104BFGNA#20
R5F104BFGNA#W0	R5F104BFGNA#40
R5F104BFGXXXNA#U0	R5F104BFGXXXNA#20
R5F104BFGXXXNA#W0	R5F104BFGXXXNA#40
R5F104BGANA#U0	R5F104BGANA#20
R5F104BGANA#W0	R5F104BGANA#40
R5F104BGAXXXNA#U0	R5F104BGAXXXNA#20
R5F104BGAXXXNA#W0	R5F104BGAXXXNA#40
R5F104BGDNA#U0	R5F104BGGNA#20
R5F104BGDNA#W0	R5F104BGGNA#40
R5F104BGDXXXNA#U0	R5F104BGGXXXNA#20
R5F104BGDXXXNA#W0	R5F104BGGXXXNA#40
R5F104BGGNA#U0	R5F104BGGNA#20
R5F104BGGNA#W0	R5F104BGGNA#40
R5F104BGGXXXNA#U0	R5F104BGGXXXNA#20
R5F104BGGXXXNA#W0	R5F104BGGXXXNA#40
R5F10EBAANA#U0	R5F10EBAANA#20
R5F10EBAANA#W0	R5F10EBAANA#40
R5F10EBAAXXXNA#U0	R5F10EBAAXXXNA#20
R5F10EBAAXXXNA#W0	R5F10EBAAXXXNA#40
R5F10EBAGNA#U0	R5F10EBAGNA#20
R5F10EBAGNA#W0	R5F10EBAGNA#40
R5F10EBAGXXXNA#U0	R5F10EBAGXXXNA#20
R5F10EBAGXXXNA#W0	R5F10EBAGXXXNA#40
R5F10EBCANA#U0	R5F10EBCANA#20
R5F10EBCANA#W0	R5F10EBCANA#40
R5F10EBCAXXXNA#U0	R5F10EBCAXXXNA#20
R5F10EBCAXXXNA#W0	R5F10EBCAXXXNA#40
R5F10EBCGNA#U0	R5F10EBCGNA#20
R5F10EBCGNA#W0	R5F10EBCGNA#40
R5F10EBCGXXXNA#U0	R5F10EBCGXXXNA#20
R5F10EBCGXXXNA#W0	R5F10EBCGXXXNA#40
R5F10EBDANA#U0	R5F10EBDANA#20
R5F10EBDANA#W0	R5F10EBDANA#40
R5F10EBDAXXXNA#U0	R5F10EBDAXXXNA#20
R5F10EBDAXXXNA#W0	R5F10EBDAXXXNA#40
R5F10EBDGNA#U0	R5F10EBDGNA#20

R5F10EBDGNA#W0	R5F10EBDGNA#40
R5F10EBDGXXXNA#U0	R5F10EBDGXXXNA#20
R5F10EBDGXXXNA#W0	R5F10EBDGXXXNA#40
R5F10EBEANA#U0	R5F10EBEANA#20
R5F10EBEANA#W0	R5F10EBEANA#40
R5F10EBEAXXXNA#U0	R5F10EBEAXXXNA#20
R5F10EBEAXXXNA#W0	R5F10EBEAXXXNA#40
R5F10EBEGNA#U0	R5F10EBEGNA#20
R5F10EBEGNA#W0	R5F10EBEGNA#40
R5F10EBEGXXXNA#U0	R5F10EBEGXXXNA#20
R5F10EBEGXXXNA#W0	R5F10EBEGXXXNA#40
R5F10JBCANA#U0	R5F10JBCANA#20
R5F10JBCANA#W0	R5F10JBCANA#40
R5F10JBCAXXXNA#U0	R5F10JBCAXXXNA#20
R5F10JBCAXXXNA#W0	R5F10JBCAXXXNA#40
R5F10JBCGNA#U0	R5F10JBCGNA#20
R5F10JBCGNA#W0	R5F10JBCGNA#40
R5F10JBCGXXXNA#U0	R5F10JBCGXXXNA#20
R5F10JBCGXXXNA#W0	R5F10JBCGXXXNA#40
R5F10KBCANA#U0	R5F10KBCANA#20
R5F10KBCANA#W0	R5F10KBCANA#40
R5F10KBCAXXXNA#U0	R5F10KBCAXXXNA#20
R5F10KBCAXXXNA#W0	R5F10KBCAXXXNA#40
R5F10KBCGNA#U0	R5F10KBCGNA#20
R5F10KBCGNA#W0	R5F10KBCGNA#40
R5F10KBCGXXXNA#U0	R5F10KBCGXXXNA#20
R5F10KBCGXXXNA#W0	R5F10KBCGXXXNA#40
R5F100EAANA#U0	R5F100EAANA#20
R5F100EAANA#W0	R5F100EAANA#40
R5F100EAAXXXNA#U0	R5F100EAAXXXNA#20
R5F100EAAXXXNA#W0	R5F100EAAXXXNA#40
R5F100EADNA#U0	R5F100EAGNA#20
R5F100EADNA#W0	R5F100EAGNA#40
R5F100EADXXXNA#U0	R5F100EAGXXXNA#20
R5F100EADXXXNA#W0	R5F100EAGXXXNA#40
R5F100EAGNA#U0	R5F100EAGNA#20
R5F100EAGNA#W0	R5F100EAGNA#40
R5F100EAGXXXNA#U0	R5F100EAGXXXNA#20
R5F100EAGXXXNA#W0	R5F100EAGXXXNA#40
R5F100ECANA#U0	R5F100ECANA#20
R5F100ECANA#W0	R5F100ECANA#40
R5F100ECAXXXNA#U0	R5F100ECAXXXNA#20
R5F100ECAXXXNA#W0	R5F100ECAXXXNA#40
R5F100ECDNA#U0	R5F100ECGNA#20
R5F100ECDNA#W0	R5F100ECGNA#40
R5F100ECDXXXNA#U0	R5F100ECGXXXNA#20
R5F100ECDXXXNA#W0	R5F100ECGXXXNA#40
R5F100ECGNA#U0	R5F100ECGNA#20

R5F100ECGNA#W0	R5F100ECGNA#40
R5F100ECGXXXNA#U0	R5F100ECGXXXNA#20
R5F100ECGXXXNA#W0	R5F100ECGXXXNA#40
R5F100EDANA#U0	R5F100EDANA#20
R5F100EDANA#W0	R5F100EDANA#40
R5F100EDAXXXNA#U0	R5F100EDAXXXNA#20
R5F100EDAXXXNA#W0	R5F100EDAXXXNA#40
R5F100EDDNA#U0	R5F100EDANA#20
R5F100EDDNA#W0	R5F100EDANA#40
R5F100EDDXXXNA#U0	R5F100EDAXXXNA#20
R5F100EDDXXXNA#W0	R5F100EDAXXXNA#40
R5F100EDGNA#U0	R5F100EDGNA#20
R5F100EDGNA#W0	R5F100EDGNA#40
R5F100EDGXXXNA#U0	R5F100EDGXXXNA#20
R5F100EDGXXXNA#W0	R5F100EDGXXXNA#40
R5F100EEANA#U0	R5F100EEANA#20
R5F100EEANA#W0	R5F100EEANA#40
R5F100EEAXXXNA#U0	R5F100EEAXXXNA#20
R5F100EEAXXXNA#W0	R5F100EEAXXXNA#40
R5F100EEDNA#U0	R5F100EEGNA#20
R5F100EEDNA#W0	R5F100EEGNA#40
R5F100EEDXXXNA#U0	R5F100EEGXXXNA#20
R5F100EEDXXXNA#W0	R5F100EEGXXXNA#40
R5F100EEGNA#U0	R5F100EEGNA#20
R5F100EEGNA#W0	R5F100EEGNA#40
R5F100EEGXXXNA#U0	R5F100EEGXXXNA#20
R5F100EEGXXXNA#W0	R5F100EEGXXXNA#40
R5F101EAANA#U0	R5F101EAANA#20
R5F101EAANA#W0	R5F101EAANA#40
R5F101EAAXXXNA#U0	R5F101EAAXXXNA#20
R5F101EAAXXXNA#W0	R5F101EAAXXXNA#40
R5F101EADNA#U0	R5F100EAGNA#20
R5F101EADNA#W0	R5F100EAGNA#40
R5F101EADXXXNA#U0	R5F100EAGXXXNA#20
R5F101EADXXXNA#W0	R5F100EAGXXXNA#40
R5F101ECANA#U0	R5F101ECANA#20
R5F101ECANA#W0	R5F101ECANA#40
R5F101ECAXXXNA#U0	R5F101ECAXXXNA#20
R5F101ECAXXXNA#W0	R5F101ECAXXXNA#40
R5F101ECDNA#U0	R5F100ECGNA#20
R5F101ECDNA#W0	R5F100ECGNA#40
R5F101ECDXXXNA#U0	R5F100ECGXXXNA#20
R5F101ECDXXXNA#W0	R5F100ECGXXXNA#40
R5F101EDANA#U0	R5F101EDANA#20
R5F101EDANA#W0	R5F101EDANA#40
R5F101EDAXXXNA#U0	R5F101EDAXXXNA#20
R5F101EDAXXXNA#W0	R5F101EDAXXXNA#40
R5F101EDDNA#U0	R5F100EDGNA#20

R5F101EDDNA#W0	R5F100EDGNA#40
R5F101EDDXXXNA#U0	R5F100EDGXXXNA#20
R5F101EDDXXXNA#W0	R5F100EDGXXXNA#40
R5F101EEANA#U0	R5F101EEANA#20
R5F101EEANA#W0	R5F101EEANA#40
R5F101EEAXXXNA#U0	R5F101EEAXXXNA#20
R5F101EEAXXXNA#W0	R5F101EEAXXXNA#40
R5F101EEDNA#U0	R5F100EEGNA#20
R5F101EEDNA#W0	R5F100EEGNA#40
R5F101EEDXXXNA#U0	R5F100EEGXXXNA#20
R5F101EEDXXXNA#W0	R5F100EEGXXXNA#40
R5F100EFANA#U0	R5F100EFANA#20
R5F100EFANA#W0	R5F100EFANA#40
R5F100EFAXXXNA#U0	R5F100EFAXXXNA#20
R5F100EFAXXXNA#W0	R5F100EFAXXXNA#40
R5F100EFDNA#U0	R5F100EFGNA#20
R5F100EFDNA#W0	R5F100EFGNA#40
R5F100EFDXXXNA#U0	R5F100EFGXXXNA#20
R5F100EFDXXXNA#W0	R5F100EFGXXXNA#40
R5F100EFGNA#U0	R5F100EFGNA#20
R5F100EFGNA#W0	R5F100EFGNA#40
R5F100EFGXXXNA#U0	R5F100EFGXXXNA#20
R5F100EFGXXXNA#W0	R5F100EFGXXXNA#40
R5F100EGANA#U0	R5F100EGANA#20
R5F100EGANA#W0	R5F100EGANA#40
R5F100EGAXXXNA#U0	R5F100EGAXXXNA#20
R5F100EGAXXXNA#W0	R5F100EGAXXXNA#40
R5F100EGDNA#U0	R5F100EGGNA#20
R5F100EGDNA#W0	R5F100EGGNA#40
R5F100EGDXXXNA#U0	R5F100EGGXXXNA#20
R5F100EGDXXXNA#W0	R5F100EGGXXXNA#40
R5F100EGGNA#U0	R5F100EGGNA#20
R5F100EGGNA#W0	R5F100EGGNA#40
R5F100EGGXXXNA#U0	R5F100EGGXXXNA#20
R5F100EGGXXXNA#W0	R5F100EGGXXXNA#40
R5F100EHANA#U0	R5F100EHANA#20
R5F100EHANA#W0	R5F100EHANA#40
R5F100EHAXXXNA#U0	R5F100EHAXXXNA#20
R5F100EHAXXXNA#W0	R5F100EHAXXXNA#40
R5F100EHDNA#U0	R5F100EHGNA#20
R5F100EHDNA#W0	R5F100EHGNA#40
R5F100EHDXXXNA#U0	R5F100EHGXXXNA#20
R5F100EHDXXXNA#W0	R5F100EHGXXXNA#40
R5F100EHGNA#U0	R5F100EHGNA#20
R5F100EHGNA#W0	R5F100EHGNA#40
R5F100EHGXXXNA#U0	R5F100EHGXXXNA#20
R5F100EHGXXXNA#W0	R5F100EHGXXXNA#40
R5F101EFANA#U0	R5F101EFANA#20

R5F101EFANA#W0	R5F101EFANA#40
R5F101EFAXXXNA#U0	R5F101EFAXXXNA#20
R5F101EFAXXXNA#W0	R5F101EFAXXXNA#40
R5F101EFDNA#U0	R5F100EFGNA#20
R5F101EFDNA#W0	R5F100EFGNA#40
R5F101EFDXXXNA#U0	R5F100EFGXXXNA#20
R5F101EFDXXXNA#W0	R5F100EFGXXXNA#40
R5F101EGANA#U0	R5F101EGANA#20
R5F101EGANA#W0	R5F101EGANA#40
R5F101EGAXXXNA#U0	R5F101EGAXXXNA#20
R5F101EGAXXXNA#W0	R5F101EGAXXXNA#40
R5F101EGDNA#U0	R5F100EGGNA#20
R5F101EGDNA#W0	R5F100EGGNA#40
R5F101EGDXXXNA#U0	R5F100EGGXXXNA#20
R5F101EGDXXXNA#W0	R5F100EGGXXXNA#40
R5F101EHANA#U0	R5F101EHANA#20
R5F101EHANA#W0	R5F101EHANA#40
R5F101EHAXXXNA#U0	R5F101EHAXXXNA#20
R5F101EHAXXXNA#W0	R5F101EHAXXXNA#40
R5F101EHDNA#U0	R5F100EHGNA#20
R5F101EHDNA#W0	R5F100EHGNA#40
R5F101EHDXXXNA#U0	R5F100EHGXXXNA#20
R5F101EHDXXXNA#W0	R5F100EHGXXXNA#40
R5F104EAANA#U0	R5F104EAANA#20
R5F104EAANA#W0	R5F104EAANA#40
R5F104EAAXXXNA#U0	R5F104EAAXXXNA#20
R5F104EAAXXXNA#W0	R5F104EAAXXXNA#40
R5F104EADNA#U0	R5F104EAGNA#20
R5F104EADNA#W0	R5F104EAGNA#40
R5F104EADXXXNA#U0	R5F104EAGXXXNA#20
R5F104EADXXXNA#W0	R5F104EAGXXXNA#40
R5F104EAGNA#U0	R5F104EAGNA#20
R5F104EAGNA#W0	R5F104EAGNA#40
R5F104EAGXXXNA#U0	R5F104EAGXXXNA#20
R5F104EAGXXXNA#W0	R5F104EAGXXXNA#40
R5F104ECANA#U0	R5F104ECANA#20
R5F104ECANA#W0	R5F104ECANA#40
R5F104ECAXXXNA#U0	R5F104ECAXXXNA#20
R5F104ECAXXXNA#W0	R5F104ECAXXXNA#40
R5F104ECDNA#U0	R5F104ECGNA#20
R5F104ECDNA#W0	R5F104ECGNA#40
R5F104ECDXXXNA#U0	R5F104ECGXXXNA#20
R5F104ECDXXXNA#W0	R5F104ECGXXXNA#40
R5F104ECGNA#U0	R5F104ECGNA#20
R5F104ECGNA#W0	R5F104ECGNA#40
R5F104ECGXXXNA#U0	R5F104ECGXXXNA#20
R5F104ECGXXXNA#W0	R5F104ECGXXXNA#40
R5F104EDANA#U0	R5F104EDANA#20

R5F104EDANA#W0	R5F104EDANA#40
R5F104EDAXXXNA#U0	R5F104EDAXXXNA#20
R5F104EDAXXXNA#W0	R5F104EDAXXXNA#40
R5F104EDDNA#U0	R5F104EDGNA#20
R5F104EDDNA#W0	R5F104EDGNA#40
R5F104EDDXXXNA#U0	R5F104EDGXXXNA#20
R5F104EDDXXXNA#W0	R5F104EDGXXXNA#40
R5F104EDGNA#U0	R5F104EDGNA#20
R5F104EDGNA#W0	R5F104EDGNA#40
R5F104EDGXXXNA#U0	R5F104EDGXXXNA#20
R5F104EDGXXXNA#W0	R5F104EDGXXXNA#40
R5F104EEANA#U0	R5F104EEANA#20
R5F104EEANA#W0	R5F104EEANA#40
R5F104EEAXXXNA#U0	R5F104EEAXXXNA#20
R5F104EEAXXXNA#W0	R5F104EEAXXXNA#40
R5F104EEDNA#U0	R5F104EEGNA#20
R5F104EEDNA#W0	R5F104EEGNA#40
R5F104EEDXXXNA#U0	R5F104EEGXXXNA#20
R5F104EEDXXXNA#W0	R5F104EEGXXXNA#40
R5F104EEGNA#U0	R5F104EEGNA#20
R5F104EEGNA#W0	R5F104EEGNA#40
R5F104EEGXXXNA#U0	R5F104EEGXXXNA#20
R5F104EEGXXXNA#W0	R5F104EEGXXXNA#40
R5F104EFANA#U0	R5F104EFANA#20
R5F104EFANA#W0	R5F104EFANA#40
R5F104EFAXXXNA#U0	R5F104EFAXXXNA#20
R5F104EFAXXXNA#W0	R5F104EFAXXXNA#40
R5F104EFDNA#U0	R5F104EFGNA#20
R5F104EFDNA#W0	R5F104EFGNA#40
R5F104EFDXXXNA#U0	R5F104EFGXXXNA#20
R5F104EFDXXXNA#W0	R5F104EFGXXXNA#40
R5F104EFGNA#U0	R5F104EFGNA#20
R5F104EFGNA#W0	R5F104EFGNA#40
R5F104EFGXXXNA#U0	R5F104EFGXXXNA#20
R5F104EFGXXXNA#W0	R5F104EFGXXXNA#40
R5F104EGANA#U0	R5F104EGANA#20
R5F104EGANA#W0	R5F104EGANA#40
R5F104EGAXXXNA#U0	R5F104EGAXXXNA#20
R5F104EGAXXXNA#W0	R5F104EGAXXXNA#40
R5F104EGDNA#U0	R5F104EGGNA#20
R5F104EGDNA#W0	R5F104EGGNA#40
R5F104EGDXXXNA#U0	R5F104EGGXXXNA#20
R5F104EGDXXXNA#W0	R5F104EGGXXXNA#40
R5F104EGGNA#U0	R5F104EGGNA#20
R5F104EGGNA#W0	R5F104EGGNA#40
R5F104EGGXXXNA#U0	R5F104EGGXXXNA#20
R5F104EGGXXXNA#W0	R5F104EGGXXXNA#40
R5F104EHANA#U0	R5F104EHANA#20

R5F104EHANA#W0	R5F104EHANA#40
R5F104EHAXXXNA#U0	R5F104EHAXXXNA#20
R5F104EHAXXXNA#W0	R5F104EHAXXXNA#40
R5F104EHDNA#U0	R5F104EHGNA#20
R5F104EHDNA#W0	R5F104EHGNA#40
R5F104EHDXXXNA#U0	R5F104EHGXXXNA#20
R5F104EHDXXXNA#W0	R5F104EHGXXXNA#40
R5F104EHGNA#U0	R5F104EHGNA#20
R5F104EHGNA#W0	R5F104EHGNA#40
R5F104EHGXXXNA#U0	R5F104EHGXXXNA#20
R5F104EHGXXXNA#W0	R5F104EHGXXXNA#40
R5F100GAANA#U0	R5F100GAANA#20
R5F100GAANA#W0	R5F100GAANA#40
R5F100GAAXXXNA#U0	R5F100GAAXXXNA#20
R5F100GAAXXXNA#W0	R5F100GAAXXXNA#40
R5F100GADNA#U0	R5F100GAGNA#20
R5F100GADNA#W0	R5F100GAGNA#40
R5F100GADXXXNA#U0	R5F100GAGXXXNA#20
R5F100GADXXXNA#W0	R5F100GAGXXXNA#40
R5F100GAGNA#U0	R5F100GAGNA#20
R5F100GAGNA#W0	R5F100GAGNA#40
R5F100GAGXXXNA#U0	R5F100GAGXXXNA#20
R5F100GAGXXXNA#W0	R5F100GAGXXXNA#40
R5F100GCANA#U0	R5F100GCANA#20
R5F100GCANA#W0	R5F100GCANA#40
R5F100GCAXXXNA#U0	R5F100GCAXXXNA#20
R5F100GCAXXXNA#W0	R5F100GCAXXXNA#40
R5F100GCDNA#U0	R5F100GCGNA#20
R5F100GCDNA#W0	R5F100GCGNA#40
R5F100GCDXXXNA#U0	R5F100GCGXXXNA#20
R5F100GCDXXXNA#W0	R5F100GCGXXXNA#40
R5F100GCGNA#U0	R5F100GCGNA#20
R5F100GCGNA#W0	R5F100GCGNA#40
R5F100GCGXXXNA#U0	R5F100GCGXXXNA#20
R5F100GCGXXXNA#W0	R5F100GCGXXXNA#40
R5F100GDANA#U0	R5F100GDANA#20
R5F100GDANA#W0	R5F100GDANA#40
R5F100GDAXXXNA#U0	R5F100GDAXXXNA#20
R5F100GDAXXXNA#W0	R5F100GDAXXXNA#40
R5F100GDDNA#U0	R5F100GDGNA#20
R5F100GDDNA#W0	R5F100GDGNA#40
R5F100GDDXXXNA#U0	R5F100GDGXXXNA#20
R5F100GDDXXXNA#W0	R5F100GDGXXXNA#40
R5F100GDGNA#U0	R5F100GDGNA#20
R5F100GDGNA#W0	R5F100GDGNA#40
R5F100GDGXXXNA#U0	R5F100GDGXXXNA#20
R5F100GDGXXXNA#W0	R5F100GDGXXXNA#40
R5F100GEANA#U0	R5F100GEANA#20

R5F100GEANA#W0	R5F100GEANA#40
R5F100GEAXXXNA#U0	R5F100GEAXXXNA#20
R5F100GEAXXXNA#W0	R5F100GEAXXXNA#40
R5F100GEDNA#U0	R5F100GEGNA#20
R5F100GEDNA#W0	R5F100GEGNA#40
R5F100GEDXXXNA#U0	R5F100GEGXXXNA#20
R5F100GEDXXXNA#W0	R5F100GEGXXXNA#40
R5F100GEGNA#U0	R5F100GEGNA#20
R5F100GEGNA#W0	R5F100GEGNA#40
R5F100GEGXXXNA#U0	R5F100GEGXXXNA#20
R5F100GEGXXXNA#W0	R5F100GEGXXXNA#40
R5F101GAANA#U0	R5F101GAANA#20
R5F101GAANA#W0	R5F101GAANA#40
R5F101GAAXXXNA#U0	R5F101GAAXXXNA#20
R5F101GAAXXXNA#W0	R5F101GAAXXXNA#40
R5F101GADNA#U0	R5F100GAGNA#20
R5F101GADNA#W0	R5F100GAGNA#40
R5F101GADXXXNA#U0	R5F100GAGXXXNA#20
R5F101GADXXXNA#W0	R5F100GAGXXXNA#40
R5F101GCANA#U0	R5F101GCANA#20
R5F101GCANA#W0	R5F101GCANA#40
R5F101GCAXXXNA#U0	R5F101GCAXXXNA#20
R5F101GCAXXXNA#W0	R5F101GCAXXXNA#40
R5F101GCDNA#U0	R5F100GCGNA#20
R5F101GCDNA#W0	R5F100GCGNA#40
R5F101GCDXXXNA#U0	R5F100GCGXXXNA#20
R5F101GCDXXXNA#W0	R5F100GCGXXXNA#40
R5F101GDANA#U0	R5F101GDANA#20
R5F101GDANA#W0	R5F101GDANA#40
R5F101GDAXXXNA#U0	R5F101GDAXXXNA#20
R5F101GDAXXXNA#W0	R5F101GDAXXXNA#40
R5F101GDDNA#U0	R5F100GDGNA#20
R5F101GDDNA#W0	R5F100GDGNA#40
R5F101GDDXXXNA#U0	R5F100GDGXXXNA#20
R5F101GDDXXXNA#W0	R5F100GDGXXXNA#40
R5F101GEANA#U0	R5F101GEANA#20
R5F101GEANA#W0	R5F101GEANA#40
R5F101GEAXXXNA#U0	R5F101GEAXXXNA#20
R5F101GEAXXXNA#W0	R5F101GEAXXXNA#40
R5F101GEDNA#U0	R5F100GEGNA#20
R5F101GEDNA#W0	R5F100GEGNA#40
R5F101GEDXXXNA#U0	R5F100GEGXXXNA#20
R5F101GEDXXXNA#W0	R5F100GEGXXXNA#40
R5F100GFANA#U0	R5F100GFANA#20
R5F100GFANA#W0	R5F100GFANA#40
R5F100GFAXXXNA#U0	R5F100GFAXXXNA#20
R5F100GFAXXXNA#W0	R5F100GFAXXXNA#40
R5F100GFDNA#U0	R5F100GFGNA#20

R5F100GFDNA#W0	R5F100GFGNA#40
R5F100GFDXXXNA#U0	R5F100GFGXXXNA#20
R5F100GFDXXXNA#W0	R5F100GFGXXXNA#40
R5F100GFGNA#U0	R5F100GFGNA#20
R5F100GFGNA#W0	R5F100GFGNA#40
R5F100GFGXXXNA#U0	R5F100GFGXXXNA#20
R5F100GFGXXXNA#W0	R5F100GFGXXXNA#40
R5F100GGANA#U0	R5F100GGANA#20
R5F100GGANA#W0	R5F100GGANA#40
R5F100GGAXXXNA#U0	R5F100GGAXXXNA#20
R5F100GGAXXXNA#W0	R5F100GGAXXXNA#40
R5F100GGDNA#U0	R5F100GGGNA#20
R5F100GGDNA#W0	R5F100GGGNA#40
R5F100GGDXXXNA#U0	R5F100GGGXXXNA#20
R5F100GGDXXXNA#W0	R5F100GGGXXXNA#40
R5F100GGGNA#U0	R5F100GGGNA#20
R5F100GGGNA#W0	R5F100GGGNA#40
R5F100GGGXXXNA#U0	R5F100GGGXXXNA#20
R5F100GGGXXXNA#W0	R5F100GGGXXXNA#40
R5F100GHANA#U0	R5F100GHANA#20
R5F100GHANA#W0	R5F100GHANA#40
R5F100GHAXXXNA#U0	R5F100GHAXXXNA#20
R5F100GHAXXXNA#W0	R5F100GHAXXXNA#40
R5F100GHDNA#U0	R5F100GHGNA#20
R5F100GHDNA#W0	R5F100GHGNA#40
R5F100GHDXXXNA#U0	R5F100GHGXXXNA#20
R5F100GHDXXXNA#W0	R5F100GHGXXXNA#40
R5F100GHGNA#U0	R5F100GHGNA#20
R5F100GHGNA#W0	R5F100GHGNA#40
R5F100GHGXXXNA#U0	R5F100GHGXXXNA#20
R5F100GHGXXXNA#W0	R5F100GHGXXXNA#40
R5F100GJANA#U0	R5F100GJANA#20
R5F100GJANA#W0	R5F100GJANA#40
R5F100GJAXXXNA#U0	R5F100GJAXXXNA#20
R5F100GJAXXXNA#W0	R5F100GJAXXXNA#40
R5F100GJDNA#U0	R5F100GJGNA#20
R5F100GJDNA#W0	R5F100GJGNA#40
R5F100GJDXXXNA#U0	R5F100GJGXXXNA#20
R5F100GJDXXXNA#W0	R5F100GJGXXXNA#40
R5F100GJGNA#U0	R5F100GJGNA#20
R5F100GJGNA#W0	R5F100GJGNA#40
R5F100GJGXXXNA#U0	R5F100GJGXXXNA#20
R5F100GJGXXXNA#W0	R5F100GJGXXXNA#40
R5F101GFANA#U0	R5F101GFANA#20
R5F101GFANA#W0	R5F101GFANA#40
R5F101GFAXXXNA#U0	R5F101GFAXXXNA#20
R5F101GFAXXXNA#W0	R5F101GFAXXXNA#40
R5F101GFDNA#U0	R5F100GFGNA#20

R5F101GFDNA#W0	R5F100GFGNA#40
R5F101GFDXXXNA#U0	R5F100GFGXXXNA#20
R5F101GFDXXXNA#W0	R5F100GFGXXXNA#40
R5F101GGANA#U0	R5F101GGANA#20
R5F101GGANA#W0	R5F101GGANA#40
R5F101GGAXXXNA#U0	R5F101GGAXXXNA#20
R5F101GGAXXXNA#W0	R5F101GGAXXXNA#40
R5F101GGDNA#U0	R5F100GGGNA#20
R5F101GGDNA#W0	R5F100GGGNA#40
R5F101GGDXXXNA#U0	R5F100GGGXXXNA#20
R5F101GGDXXXNA#W0	R5F100GGGXXXNA#40
R5F101GHANA#U0	R5F101GHANA#20
R5F101GHANA#W0	R5F101GHANA#40
R5F101GHAXXXNA#U0	R5F101GHAXXXNA#20
R5F101GHAXXXNA#W0	R5F101GHAXXXNA#40
R5F101GHDNA#U0	R5F100GHGNA#20
R5F101GHDNA#W0	R5F100GHGNA#40
R5F101GHDXXXNA#U0	R5F100GHGXXXNA#20
R5F101GHDXXXNA#W0	R5F100GHGXXXNA#40
R5F101GJANA#U0	R5F101GJANA#20
R5F101GJANA#W0	R5F101GJANA#40
R5F101GJAXXXNA#U0	R5F101GJAXXXNA#20
R5F101GJAXXXNA#W0	R5F101GJAXXXNA#40
R5F101GJDNA#U0	R5F100GJGNA#20
R5F101GJDNA#W0	R5F100GJGNA#40
R5F101GJDXXXNA#U0	R5F100GJGXXXNA#20
R5F101GJDXXXNA#W0	R5F100GJGXXXNA#40
R5F100GKANA#U0	R5F100GKANA#20
R5F100GKANA#W0	R5F100GKANA#40
R5F100GKAXXXNA#U0	R5F100GKAXXXNA#20
R5F100GKAXXXNA#W0	R5F100GKAXXXNA#40
R5F100GLANA#U0	R5F100GLANA#20
R5F100GLANA#W0	R5F100GLANA#40
R5F100GLAXXXNA#U0	R5F100GLAXXXNA#20
R5F100GLAXXXNA#W0	R5F100GLAXXXNA#40
R5F101GKANA#U0	R5F101GKANA#20
R5F101GKANA#W0	R5F101GKANA#40
R5F101GKAXXXNA#U0	R5F101GKAXXXNA#20
R5F101GKAXXXNA#W0	R5F101GKAXXXNA#40
R5F101GLANA#U0	R5F101GLANA#20
R5F101GLANA#W0	R5F101GLANA#40
R5F101GLAXXXNA#U0	R5F101GLAXXXNA#20
R5F101GLAXXXNA#W0	R5F101GLAXXXNA#40
R5F100GKDNA#U0	R5F100GKDNA#20
R5F100GKDNA#W0	R5F100GKDNA#40
R5F100GKDXXXNA#U0	R5F100GKDXXXNA#20
R5F100GKDXXXNA#W0	R5F100GKDXXXNA#40
R5F100GLDNA#U0	R5F100GLDNA#20

R5F100GLDNA#W0	R5F100GLDNA#40
R5F100GLDXXXNA#U0	R5F100GLDXXXNA#20
R5F100GLDXXXNA#W0	R5F100GLDXXXNA#40
R5F101GKDNA#U0	R5F101GKDNA#20
R5F101GKDNA#W0	R5F101GKDNA#40
R5F101GKDXXXNA#U0	R5F101GKDXXXNA#20
R5F101GKDXXXNA#W0	R5F101GKDXXXNA#40
R5F101GLDNA#U0	R5F101GLDNA#20
R5F101GLDNA#W0	R5F101GLDNA#40
R5F101GLDXXXNA#U0	R5F101GLDXXXNA#20
R5F101GLDXXXNA#W0	R5F101GLDXXXNA#40
R5F104GAANA#U0	R5F104GAANA#20
R5F104GAANA#W0	R5F104GAANA#40
R5F104GAAXXXNA#U0	R5F104GAAXXXNA#20
R5F104GAAXXXNA#W0	R5F104GAAXXXNA#40
R5F104GADNA#U0	R5F104GAGNA#20
R5F104GADNA#W0	R5F104GAGNA#40
R5F104GADXXXNA#U0	R5F104GAGXXXNA#20
R5F104GADXXXNA#W0	R5F104GAGXXXNA#40
R5F104GAGNA#U0	R5F104GAGNA#20
R5F104GAGNA#W0	R5F104GAGNA#40
R5F104GAGXXXNA#U0	R5F104GAGXXXNA#20
R5F104GAGXXXNA#W0	R5F104GAGXXXNA#40
R5F104GCANA#U0	R5F104GCANA#20
R5F104GCANA#W0	R5F104GCANA#40
R5F104GCAXXXNA#U0	R5F104GCAXXXNA#20
R5F104GCAXXXNA#W0	R5F104GCAXXXNA#40
R5F104GCDNA#U0	R5F104GCGNA#20
R5F104GCDNA#W0	R5F104GCGNA#40
R5F104GCDXXXNA#U0	R5F104GCGXXXNA#20
R5F104GCDXXXNA#W0	R5F104GCGXXXNA#40
R5F104GCGNA#U0	R5F104GCGNA#20
R5F104GCGNA#W0	R5F104GCGNA#40
R5F104GCGXXXNA#U0	R5F104GCGXXXNA#20
R5F104GCGXXXNA#W0	R5F104GCGXXXNA#40
R5F104GDANA#U0	R5F104GDANA#20
R5F104GDANA#W0	R5F104GDANA#40
R5F104GDAXXXNA#U0	R5F104GDAXXXNA#20
R5F104GDAXXXNA#W0	R5F104GDAXXXNA#40
R5F104GDDNA#U0	R5F104GDGNA#20
R5F104GDDNA#W0	R5F104GDGNA#40
R5F104GDDXXXNA#U0	R5F104GDGXXXNA#20
R5F104GDDXXXNA#W0	R5F104GDGXXXNA#40
R5F104GDGNA#U0	R5F104GDGNA#20
R5F104GDGNA#W0	R5F104GDGNA#40
R5F104GDGXXXNA#U0	R5F104GDGXXXNA#20
R5F104GDGXXXNA#W0	R5F104GDGXXXNA#40
R5F104GEANA#U0	R5F104GEANA#20

R5F104GEANA#W0	R5F104GEANA#40
R5F104GEAXXXNA#U0	R5F104GEAXXXNA#20
R5F104GEAXXXNA#W0	R5F104GEAXXXNA#40
R5F104GEDNA#U0	R5F104GEGNA#20
R5F104GEDNA#W0	R5F104GEGNA#40
R5F104GEDXXXNA#U0	R5F104GEGXXXNA#20
R5F104GEDXXXNA#W0	R5F104GEGXXXNA#40
R5F104GEGNA#U0	R5F104GEGNA#20
R5F104GEGNA#W0	R5F104GEGNA#40
R5F104GEGXXXNA#U0	R5F104GEGXXXNA#20
R5F104GEGXXXNA#W0	R5F104GEGXXXNA#40
R5F104GFANA#U0	R5F104GFANA#20
R5F104GFANA#W0	R5F104GFANA#40
R5F104GFAXXXNA#U0	R5F104GFAXXXNA#20
R5F104GFAXXXNA#W0	R5F104GFAXXXNA#40
R5F104GFDNA#U0	R5F104GFGNA#20
R5F104GFDNA#W0	R5F104GFGNA#40
R5F104GFDXXXNA#U0	R5F104GFGXXXNA#20
R5F104GFDXXXNA#W0	R5F104GFGXXXNA#40
R5F104GFGNA#U0	R5F104GFGNA#20
R5F104GFGNA#W0	R5F104GFGNA#40
R5F104GFGXXXNA#U0	R5F104GFGXXXNA#20
R5F104GFGXXXNA#W0	R5F104GFGXXXNA#40
R5F104GGANA#U0	R5F104GGANA#20
R5F104GGANA#W0	R5F104GGANA#40
R5F104GGAXXXNA#U0	R5F104GGAXXXNA#20
R5F104GGAXXXNA#W0	R5F104GGAXXXNA#40
R5F104GGDNA#U0	R5F104GGGNA#20
R5F104GGDNA#W0	R5F104GGGNA#40
R5F104GGDXXXNA#U0	R5F104GGGXXXNA#20
R5F104GGDXXXNA#W0	R5F104GGGXXXNA#40
R5F104GGGNA#U0	R5F104GGGNA#20
R5F104GGGNA#W0	R5F104GGGNA#40
R5F104GGGXXXNA#U0	R5F104GGGXXXNA#20
R5F104GGGXXXNA#W0	R5F104GGGXXXNA#40
R5F104GHANA#U0	R5F104GHANA#20
R5F104GHANA#W0	R5F104GHANA#40
R5F104GHAXXXNA#U0	R5F104GHAXXXNA#20
R5F104GHAXXXNA#W0	R5F104GHAXXXNA#40
R5F104GHDNA#U0	R5F104GHGNA#20
R5F104GHDNA#W0	R5F104GHGNA#40
R5F104GHDXXXNA#U0	R5F104GHGXXXNA#20
R5F104GHDXXXNA#W0	R5F104GHGXXXNA#40
R5F104GHGNA#U0	R5F104GHGNA#20
R5F104GHGNA#W0	R5F104GHGNA#40
R5F104GHGXXXNA#U0	R5F104GHGXXXNA#20
R5F104GHGXXXNA#W0	R5F104GHGXXXNA#40
R5F104GJANA#U0	R5F104GJANA#20

R5F104GJANA#W0	R5F104GJANA#40
R5F104GJAXXXNA#U0	R5F104GJAXXXNA#20
R5F104GJAXXXNA#W0	R5F104GJAXXXNA#40
R5F104GJDNA#U0	R5F104GJGNA#20
R5F104GJDNA#W0	R5F104GJGNA#40
R5F104GJDXXXNA#U0	R5F104GJGXXXNA#20
R5F104GJDXXXNA#W0	R5F104GJGXXXNA#40
R5F104GJGNA#U0	R5F104GJGNA#20
R5F104GJGNA#W0	R5F104GJGNA#40
R5F104GJGXXXNA#U0	R5F104GJGXXXNA#20
R5F104GJGXXXNA#W0	R5F104GJGXXXNA#40
R5F104GKANA#U0	R5F104GKANA#20
R5F104GKANA#W0	R5F104GKANA#40
R5F104GKAXXXNA#U0	R5F104GKAXXXNA#20
R5F104GKAXXXNA#W0	R5F104GKAXXXNA#40
R5F104GKGNA#U0	R5F104GKGNA#20
R5F104GKGNA#W0	R5F104GKGNA#40
R5F104GKGXXXNA#U0	R5F104GKGXXXNA#20
R5F104GKGXXXNA#W0	R5F104GKGXXXNA#40
R5F104GLANA#U0	R5F104GLANA#20
R5F104GLANA#W0	R5F104GLANA#40
R5F104GLAXXXNA#U0	R5F104GLAXXXNA#20
R5F104GLAXXXNA#W0	R5F104GLAXXXNA#40
R5F104GLGNA#U0	R5F104GLGNA#20
R5F104GLGNA#W0	R5F104GLGNA#40
R5F104GLGXXXNA#U0	R5F104GLGXXXNA#20
R5F104GLGXXXNA#W0	R5F104GLGXXXNA#40
R5F10EGAANA#U0	R5F10EGAANA#20
R5F10EGAANA#W0	R5F10EGAANA#40
R5F10EGAAXXXNA#U0	R5F10EGAAXXXNA#20
R5F10EGAAXXXNA#W0	R5F10EGAAXXXNA#40
R5F10EGAGNA#U0	R5F10EGAGNA#20
R5F10EGAGNA#W0	R5F10EGAGNA#40
R5F10EGAGXXXNA#U0	R5F10EGAGXXXNA#20
R5F10EGAGXXXNA#W0	R5F10EGAGXXXNA#40
R5F10EGCANA#U0	R5F10EGCANA#20
R5F10EGCANA#W0	R5F10EGCANA#40
R5F10EGCAXXXNA#U0	R5F10EGCAXXXNA#20
R5F10EGCAXXXNA#W0	R5F10EGCAXXXNA#40
R5F10EGCGNA#U0	R5F10EGCGNA#20
R5F10EGCGNA#W0	R5F10EGCGNA#40
R5F10EGCGXXXNA#U0	R5F10EGCGXXXNA#20
R5F10EGCGXXXNA#W0	R5F10EGCGXXXNA#40
R5F10EGDANA#U0	R5F10EGDANA#20
R5F10EGDANA#W0	R5F10EGDANA#40
R5F10EGDAXXXNA#U0	R5F10EGDAXXXNA#20
R5F10EGDAXXXNA#W0	R5F10EGDAXXXNA#40
R5F10EGDGNA#U0	R5F10EGDGNA#20

R5F10EGDGNA#W0	R5F10EGDGNA#40
R5F10EGDGXXXNA#U0	R5F10EGDGXXXNA#20
R5F10EGDGXXXNA#W0	R5F10EGDGXXXNA#40
R5F10EGEANA#U0	R5F10EGEANA#20
R5F10EGEANA#W0	R5F10EGEANA#40
R5F10EGEAXXXNA#U0	R5F10EGEAXXXNA#20
R5F10EGEAXXXNA#W0	R5F10EGEAXXXNA#40
R5F10EGEGNA#U0	R5F10EGEGNA#20
R5F10EGEGNA#W0	R5F10EGEGNA#40
R5F10EGEGXXXNA#U0	R5F10EGEGXXXNA#20
R5F10EGEGXXXNA#W0	R5F10EGEGXXXNA#40
R5F10JGCANA#U0	R5F10JGCANA#20
R5F10JGCANA#W0	R5F10JGCANA#40
R5F10JGCAXXXNA#U0	R5F10JGCAXXXNA#20
R5F10JGCAXXXNA#W0	R5F10JGCAXXXNA#40
R5F10JGCGNA#U0	R5F10JGCGNA#20
R5F10JGCGNA#W0	R5F10JGCGNA#40
R5F10JGCGXXXNA#U0	R5F10JGCGXXXNA#20
R5F10JGCGXXXNA#W0	R5F10JGCGXXXNA#40
R5F10KGCANA#U0	R5F10KGCANA#20
R5F10KGCANA#W0	R5F10KGCANA#40
R5F10KGCAXXXNA#U0	R5F10KGCAXXXNA#20
R5F10KGCAXXXNA#W0	R5F10KGCAXXXNA#40
R5F10KGCGNA#U0	R5F10KGCGNA#20
R5F10KGCGNA#W0	R5F10KGCGNA#40
R5F10KGCGXXXNA#U0	R5F10KGCGXXXNA#20
R5F10KGCGXXXNA#W0	R5F10KGCGXXXNA#40
R5F10RLAANB#U0	R5F10RLAANB#20
R5F10RLAANB#W0	R5F10RLAANB#40
R5F10RLAAXXXNB#U0	R5F10RLAAXXXNB#20
R5F10RLAAXXXNB#W0	R5F10RLAAXXXNB#40
R5F10RLAGNB#U0	R5F10RLAGNB#20
R5F10RLAGNB#W0	R5F10RLAGNB#40
R5F10RLAGXXXNB#U0	R5F10RLAGXXXNB#20
R5F10RLAGXXXNB#W0	R5F10RLAGXXXNB#40
R5F10RLCANB#U0	R5F10RLCANB#20
R5F10RLCANB#W0	R5F10RLCANB#40
R5F10RLCAXXXNB#U0	R5F10RLCAXXXNB#20
R5F10RLCAXXXNB#W0	R5F10RLCAXXXNB#40
R5F10RLCGNB#U0	R5F10RLCGNB#20
R5F10RLCGNB#W0	R5F10RLCGNB#40
R5F10RLCGXXXNB#U0	R5F10RLCGXXXNB#20
R5F10RLCGXXXNB#W0	R5F10RLCGXXXNB#40
R5F11778GNA#U0	R5F11778GNA#20
R5F11778GNA#W0	R5F11778GNA#40
R5F11778GXXXNA#U0	R5F11778GXXXNA#20
R5F11778GXXXNA#W0	R5F11778GXXXNA#40
R5F1177AGNA#U0	R5F1177AGNA#20

R5F1177AGNA#W0	R5F1177AGNA#40
R5F1177AGXXXXNA#U0	R5F1177AGXXXNA#20
R5F1177AGXXXNA#W0	R5F1177AGXXXNA#40
R5F11BBCANA#40	R5F11BBCANA#40 (No change)
R5F11BBEANA#40	R5F11BBEANA#40 (No change)

CU WIRE AND FACTORY CHANGE DIFFERENCE OF RL78_HWQFN PRODUCTS

Powertech Technology Inc., Group/ Greatek Electronics Inc.,

King Yuan Electronics Co., Ltd

JUNE. 23. 2020

PRODUCTION AND TECHNOLOGY UNIT
IOT AND INFRASTRUCTURE BUSINESS UNIT
RENESAS ELECTRONICS CORPORATION

MCP-AB-20-0061

© 2020 Renesas Electronics Corporation. All rights reserved.

Notice

1. Descriptions of circuits, software and other related information in this document are provided only to illustrate the operation of semiconductor products and application examples. You are fully responsible for the incorporation or any other use of the circuits, software, and information in the design of your product or system. Renesas Electronics disclaims any and all liability for any losses and damages incurred by you or third parties arising from the use of these circuits, software, or information.
2. Renesas Electronics hereby expressly disclaims any warranties against and liability for infringement or any other claims involving patents, copyrights, or other intellectual property rights of third parties, by or arising from the use of Renesas Electronics products or technical information described in this document, including but not limited to, the product data, drawings, charts, programs, algorithms, and application examples.
3. No license, express, implied or otherwise, is granted hereby under any patents, copyrights or other intellectual property rights of Renesas Electronics or others.
4. You shall not alter, modify, copy, or reverse engineer any Renesas Electronics product, whether in whole or in part. Renesas Electronics disclaims any and all liability for any losses or damages incurred by you or third parties arising from such alteration, modification, copying or reverse engineering.
5. Renesas Electronics products are classified according to the following two quality grades: "Standard" and "High Quality". The intended applications for each Renesas Electronics product depends on the product's quality grade, as indicated below.
   "Standard": Computers; office equipment; communications equipment; test and measurement equipment; audio and visual equipment; home electronic appliances; machine tools; personal electronic equipment; industrial robots; etc.
   "High Quality": Transportation equipment (automobiles, trains, ships, etc.); traffic control (traffic lights); large-scale communication equipment; key financial terminal systems; safety control equipment; etc.
   Unless expressly designated as a high reliability product or a product for harsh environments in a Renesas Electronics data sheet or other Renesas Electronics document, Renesas Electronics products are not intended or authorized for use in products or systems that may pose a direct threat to human life or bodily injury (artificial life support devices or systems; surgical implantations; etc.), or may cause serious property damage (space system; undersea repeaters; nuclear power control systems; aircraft control systems; key plant systems; military equipment; etc.). Renesas Electronics disclaims any and all liability for any damages or losses incurred by you or any third parties arising from the use of any Renesas Electronics product that is inconsistent with any Renesas Electronics data sheet, user's manual or other Renesas Electronics document.
6. When using Renesas Electronics products, refer to the latest product information (data sheets, user's manuals, application notes, "General Notes for Handling and Using Semiconductor Devices" in the reliability handbook, etc.), and ensure that usage conditions are within the ranges specified by Renesas Electronics with respect to maximum ratings, operating power supply voltage range, heat dissipation characteristics, installation, etc. Renesas Electronics disclaims any and all liability for any malfunctions, failure or accident arising out of the use of Renesas Electronics products outside of such specified ranges.
7. Although Renesas Electronics endeavors to improve the quality and reliability of Renesas Electronics products, semiconductor products have specific characteristics, such as the occurrence of failure at a certain rate and malfunctions under certain use conditions. Unless designated as a high reliability product or a product for harsh environments in a Renesas Electronics data sheet or other Renesas Electronics document, Renesas Electronics products are not subject to radiation resistance design. You are responsible for implementing safety measures to guard against the possibility of bodily injury, injury or damage caused by fire, and/or danger to the public in the event of a failure or malfunction of Renesas Electronics products, such as safety design for hardware and software, including but not limited to redundancy, fire control and malfunction prevention, appropriate treatment for aging degradation or any other appropriate measures. Because the evaluation of microcomputer software alone is very difficult and impractical, you are responsible for evaluating the safety of the final products or systems manufactured by you.
8. Please contact a Renesas Electronics sales office for details as to environmental matters such as the environmental compatibility of each Renesas Electronics product. You are responsible for carefully and sufficiently investigating applicable laws and regulations that regulate the inclusion or use of controlled substances, including without limitation, the EU RoHS Directive, and using Renesas Electronics products in compliance with all these applicable laws and regulations. Renesas Electronics disclaims any and all liability for damages or losses occurring as a result of your noncompliance with applicable laws and regulations.
9. Renesas Electronics products and technologies shall not be used for or incorporated into any products or systems whose manufacture, use, or sale is prohibited under any applicable domestic or foreign laws or regulations. You shall comply with any applicable export control laws and regulations promulgated and administered by the governments of any countries asserting jurisdiction over the parties or transactions.
10. It is the responsibility of the buyer or distributor of Renesas Electronics products, or any other party who distributes, disposes of, or otherwise sells or transfers the product to a third party, to notify such third party in advance of the contents and conditions set forth in this document.
11. This document shall not be reprinted, reproduced or duplicated in any form, in whole or in part, without prior written consent of Renesas Electronics.
12. Please contact a Renesas Electronics sales office if you have any questions regarding the information contained in this document or Renesas Electronics products.

(Note 1) "Renesas Electronics" as used in this document means Renesas Electronics Corporation and also includes its directly or indirectly controlled subsidiaries.
(Note 2) "Renesas Electronics product(s)" means any product developed or manufactured by or for Renesas Electronics.

(Rev. 4.0-1 November 2017)

© 2020 Renesas Electronics Corporation. All rights reserved.

BIG IDEAS FOR EVERY SPACE RENESAS

Overview

For RL78 microcomputer products, we continuously add manufacturing factories and change assembly materials for stable supply.

For HWQFN package products, manufacturing factories and assembly materials also are changed this time.

Change points are reported in the following pages.

© 2020 Renesas Electronics Corporation. All rights reserved.

BIG IDEAS FOR EVERY SPACE RENESAS

Outline

1) Material: Standard materials are used in new factory
   1-1) Bonding wire change to Copper (Cu)
   1-2) Lead frame, Die mount material and Mold resin material change
2) Factory
   2-1) Assembly factory
      Current factory: Amkor Technology Japan Kumamoto/Hakodate (ATJ Kumamoto/ ATJ Hakodate)
      New factory: Powertech Technology Inc., Group_Greatek Electronics Inc. (PTI_Greatek)
   2-2) Sorting factory:
      Current factory: Amkor Technology Japan Kumamoto (ATJ Kumamoto)
      New factory: King Yuan Electronics Co., Ltd (KYEC)
3) Package outline:
      There are changes in some of dimensions.
      The package surface becomes matte but does not affect the reliability.

© 2020 Renesas Electronics Corporation. All rights reserved.

BIG IDEAS FOR EVERY SPACE RENESAS

4) Marking on package

4-1) Font change

4-2) Manufacturing lot number change (from 9 digit to 7 digit)

4-3) Delete country of origin indication

5) Packaging material:

5-1) Tray and the order of devices change

5-2) Addition of bundling band color (Black)

5-3) Emboss tape change

5-4) Reel for emboss taping change

6) Storage condition after opening:

Current product: Amkor Technology Japan: Within 30°C/ 70%RH/ 168h

New product: Powertech Technology Inc., Group: Within 30°C/ 60%RH/ 168h (JEDEC compliant)

- QC flow, fit, electrical characteristics, function, quality and reliability: There is no change.
- Ordering P/N: There are changes. There are changes. For details, please refer to the following pages and the attached difference document.

© 2020 Renesas Electronics Corporation. All rights reserved.

BIG IDEAS FOR EVERY SPACE RENESAS

7) Target P/N: RL78 HWQFN package products. (Some products are not applicable)

Please refer to attached list about the ordering part number.

Due to the change to Cu wire, #U* changes to #2* for tray packed P/N and #W* changes to #4* for embossed taping P/N.

G12 group are integrated into revised P/N that we are guiding in PCN MEPM-AC-15-0009 [*Information about the revised RL78/G12, without restriction on LS (low-speed main) mode*] in February 2016, Technical Update document No.: TN-RL*-A012C/E.

At the same time as this change, we will integrate the P/N for industrial applications.

Examples of the P/N are shown below. Please see the P/N reference table for details.

G12 "Example: 16kB Flash ROM Tray packed P/N"

Current	New
R5F1027AANA#U0/ #U5	R5F1027AANA#25
R5F1027ADNA#U0/ #U5	R5F1027AGNA#25
R5F1027AGNA#U0/ #U5	
R5F1037AANA#U0/ #U5	R5F1037AANA#25
R5F1037ADNA#U0/ #U5	

G12:
- Integrate into revised P/N
- D-ver. Integrated into G-ver.
- #U0/#U5 → #25: Try packing
  #W0/#W5 → #45: Emboss taping

Expect for G12 "Example: G13 32pin 128kB Flash ROM Emboss taping P/N"

Current	New
R5F100BGANA#W0	R5F100BGANA#40
R5F100BGDNA#W0	R5F100BGGNA#40
R5F100BGGNA#W0	
R5F101BGANA#W0	R5F101BGANA#40
R5F101BGDNA#W0	

Expect for G12:
- D-ver. Integrated into G-ver.
- #U0 → #20: Try packing
  #W0 → #40: Emboss taping

© 2020 Renesas Electronics Corporation. All rights reserved.

BIG IDEAS FOR EVERY SPACE RENESAS

HWQFN Lineup

The package lineup of the target products is shown below.

Outlie	Pin count	Pitch	G11	G12	G13	G14	G1A	G1C	G1F	G1P	I1D	L12
4x4	24	0.5	√	√	√				√	√ *	√	
5x5	32	0.5			√	√	√	√	√			
6x6	40	0.5			√	√						
7x7	48	0.5			√	√	√	√				
8x8	64	0.4										√

*: Is new release

The sample and mass production timing varies depending on the P/N, so please contact Renesas sales office, distributor or agency.

PLP will be switched to new P/N sequentially. The current P/N will be gradually discontinued after the new model name is released.

© 2020 Renesas Electronics Corporation. All rights reserved.

BIG IDEAS FOR EVERY SPACE RENESAS

Difference of specification

Item		New	Current	
Assembly factory		PTI_Greatek	ATJ Kumamoto	ATJ Hakodate
Sorting factory		KYEC	ATJ Kumamoto	ATJ Kumamoto
Package	Outline	Refer to page 9 to 26	No change (Refer to page 9 to 24)	No change (Refer to page 12 to 15)
Parts	Lead frame	Refer to page 27	No change (Refer to page 27)	No change (Refer to page 27)
	Die mount	Ag epoxy paste C	Ag epoxy paste A	Ag epoxy paste B
	Bonding wire	Cu (Pd coating)	Au	Cu (Pd coating)
	Mold resin	Mold resin C	Epoxy resin A	Epoxy resin B
Marking	Font	Refer to page 28 to 29	No change (Refer to page 28)	No change (Refer to page 29)
	Manufacturing lot number	7 digits	9 digits	9 digits
	Country of origin indication	No indication	Indicated	No Indication
Packing	Tray	Refer to page 31 to 35	No change (Refer to page 31 to 35)	-
	bundling band color	Add Black	There are multiple colors	-
	Emboss tape	Refer to page 36 to 40	No change (Refer to page 36 to 40)	No change (Refer to page 37)
Storage condition	After opening	Within 30°C/ 60%RH/ 168h	Within 30°C/ 70%RH/ 168h	Within 30°C/ 70%RH/ 168h
Ordering P/N		R5F10*NA#2* / #4*	R5F10*NA#U* / #W*	R5F11BB*ANA#40

*: is indicate a unique character.

© 2020 Renesas Electronics Corporation. All rights reserved.

BIG IDEAS FOR EVERY SPACE RENESAS

4x4mm 24pin HWQFN package drawing (New)

JEITA Package code	RENESAS code	MASS(TYP.)[g]
P-HWQFN024-4x4-0.50	PWQN0024KF-A	0.04

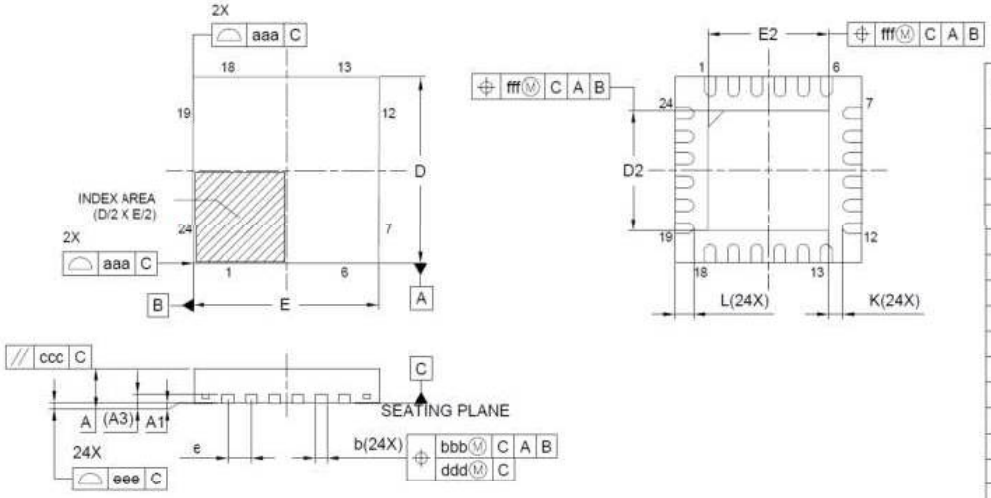

Reference Symbol	Dimension in Millimeters		
	Min.	Nom.	Max.
A	—	—	0.80
A1	0.00	0.02	0.05
A3		0.203 REF.	
b	0.18	0.25	0.30
D		4.00 BSC	
E		4.00 BSC	
e		0.50 BSC	
L	0.35	0.40	0.45
K	0.20	—	—
D2	2.55	2.60	2.65
E2	2.55	2.60	2.65
aaa		0.15	
bbb		0.10	
ccc		0.10	
ddd		0.05	
eee		0.08	
fff		0.10	

© 2020 Renesas Electronics Corporation. All rights reserved.

BIG IDEAS FOR EVERY SPACE RENESAS

4x4mm 24pin HWQFN package drawing (Current)

JEITA Package code	RENESAS code	Previous code	MASS(TYP.)[g]
P-HWQFN24-4x4-0.50	PWQN0024KE-A	P24K8-50-CAB-3	0.04

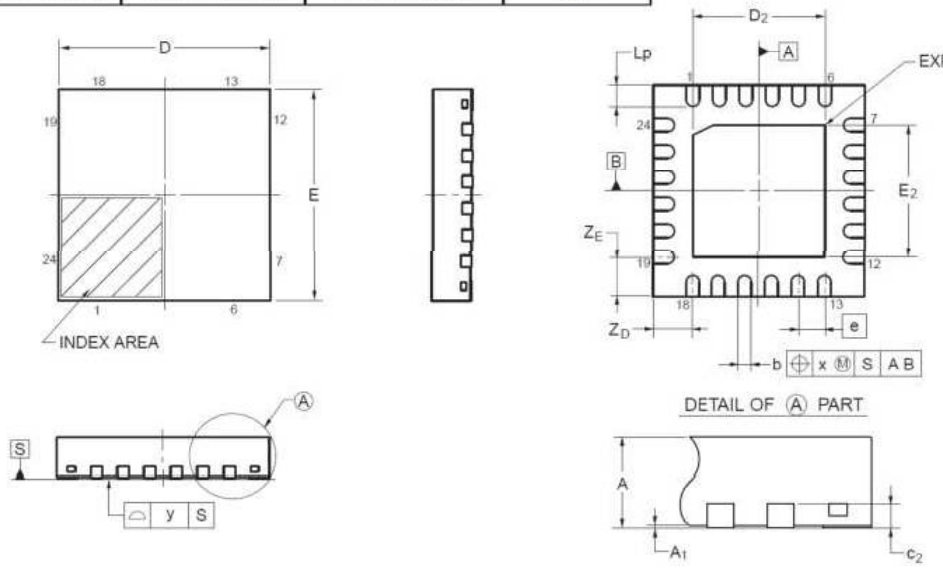

Referance Symbol	Dimension in Millimeters		
	Min	Nom	Max
D	3.95	4.00	4.05
E	3.95	4.00	4.05
A	—	—	0.80
A_1	0.00	—	—
b	0.18	0.25	0.30
e	—	0.50	—
Lp	0.30	0.40	0.50
κ	—	—	0.05
γ	—	—	0.05
Z_D	—	0.75	—
Z_E	—	0.75	—
c_2	0.15	0.20	0.25
D_2	—	2.50	—
E_2	—	2.50	—

© 2020 Renesas Electronics Corporation. All rights reserved.

BIG IDEAS FOR EVERY SPACE RENESAS

Dimension comparison: 4x4mm 24pin HWQFN package

JEDEC notation will be used instead of the conventional notation.

New Symbol	6x6mm 40pin HWQFN			Current Symbol	6x6mm 40pin HWQFN		
	Dimension in Millimeters				Dimension in Millimeters		
	Min	Nom	Max		Min	Nom	Max
A	-	-	0.80	A	-	-	0.80
A1	0.00	0.02	0.05	A1	0.00	-	-
A3	0.203 REF.			C2	0.15	0.20	0.25
b	0.18	0.25	0.30	b	0.18	0.25	0.30
D	4.00 BSC			E	3.95	4.00	4.05
E	4.00 BSC			D	3.95	4.00	4.05
e	0.50 BSC			e	-	0.50	-
L	0.35	0.40	0.45	Lp	0.30	0.40	0.50
K	0.20	-	-	-	-	-	-
D2	2.55	2.60	2.65	E2	-	2.50	-
E2	2.55	2.60	2.65	D2	-	2.50	-
-	-	-	-	ZD	-	0.75	-
-	-	-	-	ZE	-	0.75	-
aaa	0.15			-	-	-	-
bbb	0.10			x	-	-	0.05
ccc	0.10			-	-	-	-
ddd	0.05			-	-	-	-
eee	0.08			y	-	-	0.05
fff	0.10			-	-	-	-

© 2020 Renesas Electronics Corporation. All rights reserved.

BIG IDEAS FOR EVERY SPACE RENESAS

5x5mm 32pin HWQFN package drawing (New)

JEITA Package code	RENESAS code	MASS(TYP.)[g]
P-HWQFN032-5x5-0.50	PWQN0032KE-A	0.06

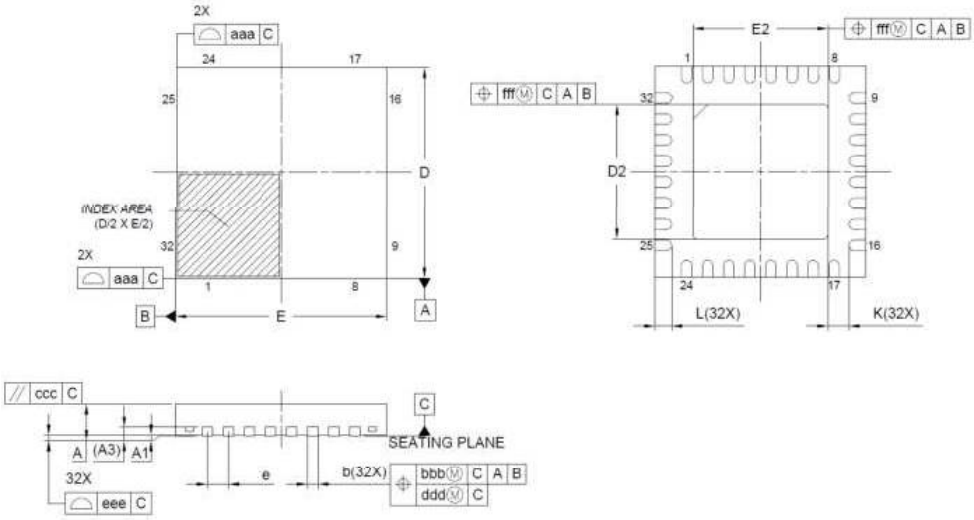

Reference Symbol	Dimension in Millimeters		
	Min.	Nom.	Max.
A	—	—	0.80
A_1	0.00	0.02	0.05
A_3	0.203 REF.		
b	0.18	0.25	0.30
D	5.00 BSC		
E	5.00 BSC		
e	0.50 BSC		
L	0.35	0.40	0.45
K	0.20	—	—
D_2	3.15	3.20	3.25
E_2	3.15	3.20	3.25
aaa	0.15		
bbb	0.10		
ccc	0.10		
ddd	0.05		
eee	0.08		
fff	0.10		

© 2020 Renesas Electronics Corporation. All rights reserved.

BIG IDEAS FOR EVERY SPACE RENESAS

5x5mm 32pin HWQFN package drawing (Current: ATJ Kumamoto)

JEITA Package code	RENESAS code	Previous code	MASS (TYP.)[g]
P-HWQFN32-5x5-0.50	PWQN0032KB-A	P32K8-50-3B4-5	0.06

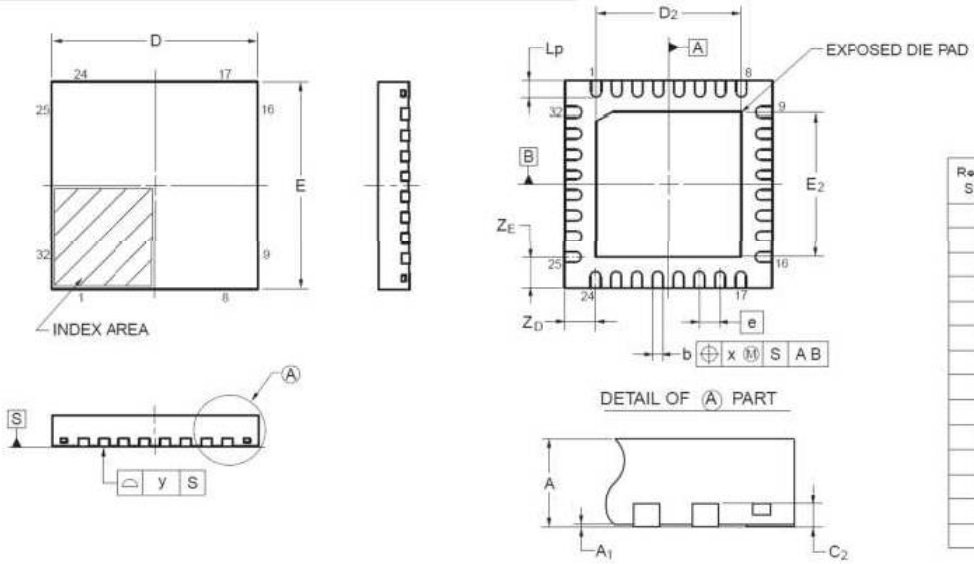

Referance Symbol	Dimension in Millimeters		
	Min	Nom	Max
D	4.95	5.00	5.05
E	4.95	5.00	5.05
A	—	—	0.80
A_1	0.00	—	—
b	0.18	0.25	0.30
e	—	0.50	—
Lp	0.30	0.40	0.50
x	—	—	0.05
y	—	—	0.05
Z_D	—	0.75	—
Z_E	—	0.75	—
c_2	0.15	0.20	0.25
D_2	—	3.50	—
E_2	—	3.50	—

© 2020 Renesas Electronics Corporation. All rights reserved.

BIG IDEAS FOR EVERY SPACE RENESAS

5x5mm 32pin HVQFN package drawing (Current: ATJ Hakodate)

JEITA Package Code	RENESAS Code	Previous Code	MASS (Typ) [g]
P-HVQFN32-5x5-0.50	PVQN0032KF-A	—	0.05

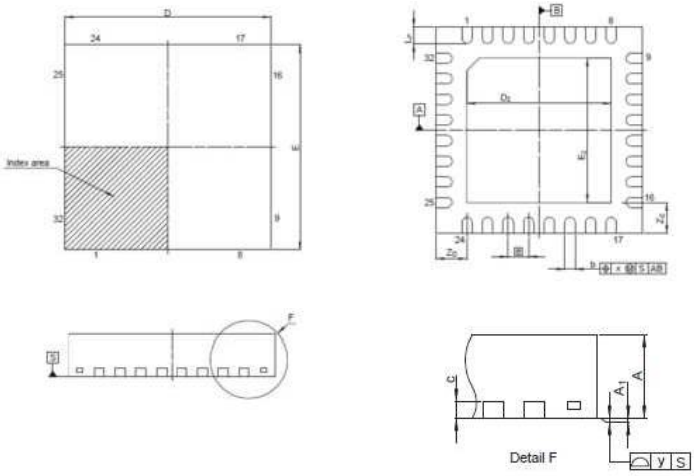

Reference Symbol	Dimensions in millimeters		
	Min	Nom	Max
D	4.90	5.00	5.10
E	4.90	5.00	5.10
A	—	—	1.00
A_1	0.00	—	—
b	0.20	0.25	0.30
e	—	0.50	—
L_P	0.30	0.40	0.50
x	—	—	0.05
y	—	—	0.05
Z_D	—	0.75	—
Z_E	—	0.75	—
c	—	0.20	—
D_2	—	3.50	—
E_2	—	3.50	—

© 2020 Renesas Electronics Corporation. All rights reserved.

BIG IDEAS FOR EVERY SPACE RENESAS

Dimension comparison: 5x5mm 32pin HWQFN package

JEDEC notation will be used instead of the conventional notation.

New Symbol	5x5mm 32pin HWQFN PWQN0032KE-A			Current Symbol	Kumamoto : 5x5mm 32pin HWQFN PWQN0032KB-A			Hakodate : 5x5mm 32pin HVQFN PVQN0032KF-A		
	Dimension in Millimeters				Dimension in Millimeters			Dimension in Millimeters		
	Min	Nom	Max		Min	Nom	Max	Min	Nom	Max
A	-	-	0.80	A	-	-	0.80	-	-	1.00
A1	0.00	0.02	0.05	A1	0.00	-	-	0.00	-	-
A3	0.203 REF.			C2	0.15	0.20	0.25	-	0.20	-
b	0.18	0.25	0.30	b	0.18	0.25	0.30	0.20	0.25	0.30
D	5.00 BSC			E	4.95	5.00	5.05	4.90	5.00	5.10
E	5.00 BSC			D	4.95	5.00	5.05	4.90	5.00	5.10
e	0.50 BSC			e	-	0.50	-	-	0.50	-
L	0.35	0.40	0.45	Lp	0.30	0.40	0.50	0.30	0.40	0.50
K	0.20	-	-	-	-	-	-	-	-	-
D2	3.15	3.20	3.25	E2	-	3.50	-	-	3.50	-
E2	3.15	3.20	3.25	D2	-	3.50	-	-	3.50	-
-	-	-	-	ZD	-	0.75	-	-	0.75	-
-	-	-	-	ZE	-	0.75	-	-	0.75	-
aaa	0.15			-	-	-	-	-	-	-
bbb	0.10			x	-	-	0.05	-	-	0.05
ccc	0.10			-	-	-	-	-	-	-
ddd	0.05			-	-	-	-	-	-	-
eee	0.08			y	-	-	0.05	-	-	0.05
fff	0.10			-	-	-	-	-	-	-

© 2020 Renesas Electronics Corporation. All rights reserved.

BIG IDEAS FOR EVERY SPACE RENESAS

6x6mm 40pin HWQFN package drawing (New)

JEITA Package code	RENESAS code	MASS(TYP.)[g]
P-HWQFN040-6x6-0.50	PWQN0040KD-A	0.08

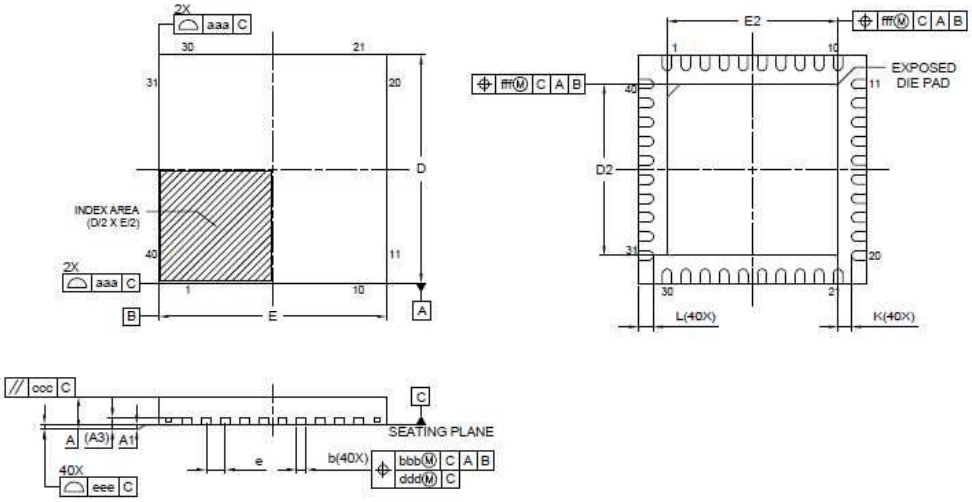

Reference Symbol	Dimension in Millimeters		
	Min.	Nom.	Max.
A	—	—	0.80
A_1	0.00	0.02	0.05
A_3	0.203 REF.		
b	0.18	0.25	0.30
D	6.00 BSC		
E	6.00 BSC		
e	0.50 BSC		
L	0.30	0.40	0.50
K	0.20	—	—
D_2	4.45	4.50	4.55
E_2	4.45	4.50	4.55
aaa	0.15		
bbb	0.10		
ccc	0.10		
ddd	0.05		
eee	0.08		
fff	0.10		

© 2020 Renesas Electronics Corporation. All rights reserved.

BIG IDEAS FOR EVERY SPACE RENESAS

6x6mm 40pin HWQFN package drawing (Current)

JEITA Package code	RENESAS code	Previous code	MASS(TYP.)[g]
P-HWQFN40-6x6-0.50	PWQN0040KC-A	P40K8-50-4B4-5	0.09

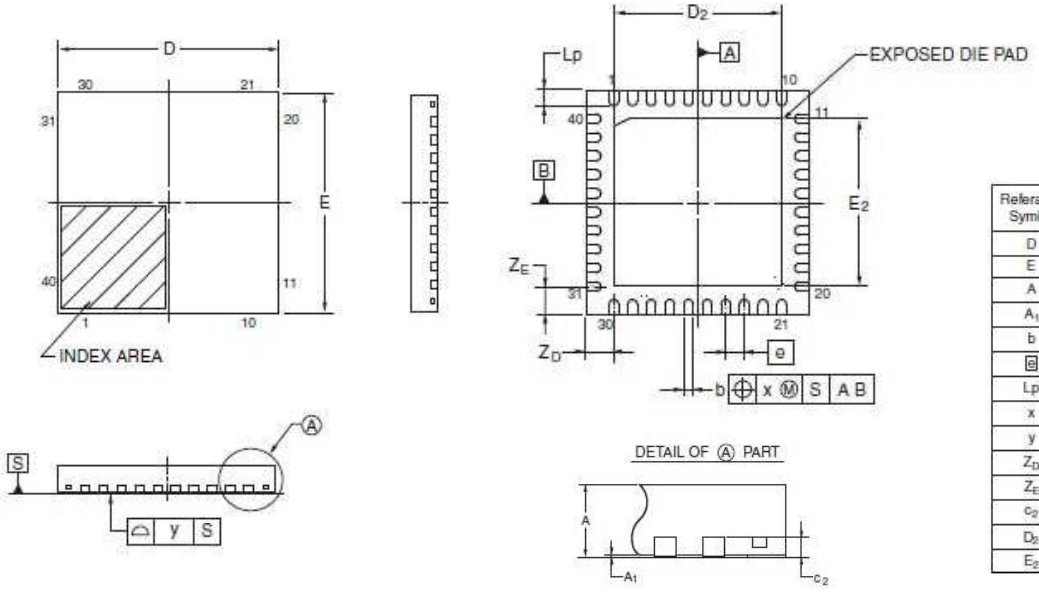

Referance Symbol	Dimension in Millimeters		
	Min	Nom	Max
D	5.95	6.00	6.05
E	5.95	6.00	6.05
A	—	—	0.80
A_1	0.00	—	—
b	0.18	0.25	0.30
e	—	0.50	—
Lp	0.30	0.40	0.50
x	—	—	0.05
y	—	—	0.05
Z_D	—	0.75	—
Z_E	—	0.75	—
c_2	0.15	0.20	0.25
D_2	—	4.50	—
E_2	—	4.50	—

© 2020 Renesas Electronics Corporation. All rights reserved.

BIG IDEAS FOR EVERY SPACE RENESAS

Dimension comparison: 6x6mm 40pin HWQFN package

JEDEC notation will be used instead of the conventional notation.

New Symbol	6x6mm 40pin HWQFN			Current Symbol	6x6mm 40pin HWQFN		
	Dimension in Millimeters				Dimension in Millimeters		
	Min	Nom	Max		Min	Nom	Max
A	-	-	0.80	A	-	-	0.80
A1	0.00	0.02	0.05	A1	0.00	-	-
A3	0.203 REF.			C2	0.15	0.20	0.25
b	0.18	0.25	0.30	b	0.18	0.25	0.30
D	6.00 BSC			E	5.95	6.00	6.05
E	6.00 BSC			D	5.95	6.00	6.05
e	0.50 BSC			e	-	0.50	-
L	0.30	0.40	0.50	Lp	0.30	0.40	0.50
K	0.20	-	-	-	-	-	-
D2	4.45	4.50	4.55	E2	-	4.50	-
E2	4.45	4.50	4.55	D2	-	4.50	-
-	-	-	-	ZD	-	0.75	-
-	-	-	-	ZE	-	0.75	-
aaa	0.15			-	-	-	-
bbb	0.10			x	-	-	0.05
ccc	0.10			-	-	-	-
ddd	0.05			-	-	-	-
eee	0.08			y	-	-	0.05
fff	0.10			-	-	-	-

© 2020 Renesas Electronics Corporation. All rights reserved.

BIG IDEAS FOR EVERY SPACE RENESAS

7x7mm 48pin HWQFN package drawing (New)

JEITA Package code	RENESAS code	MASS(TYP.)[g]
P-HWQFN048-7x7-0.50	PWQN0048KE-A	0.13

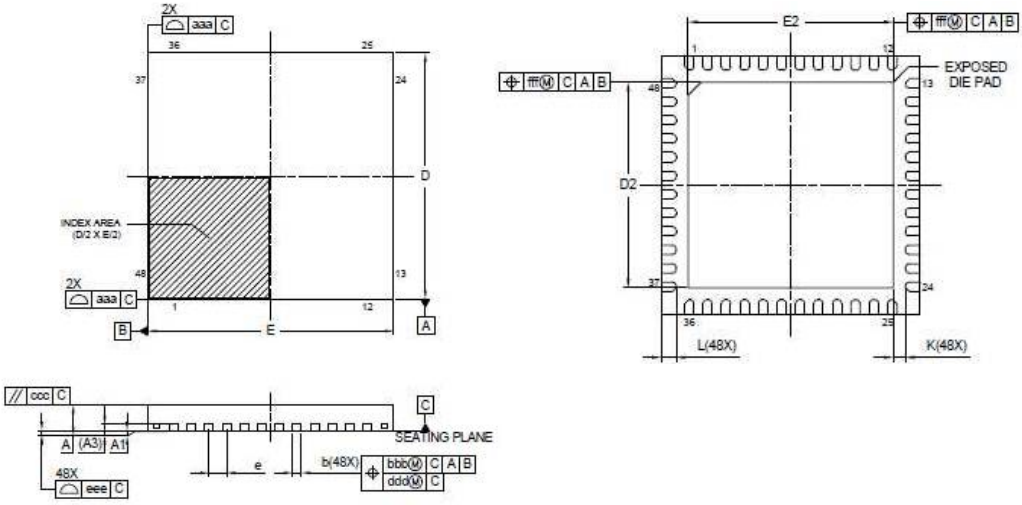

Reference Symbol	Dimension in Millimeters		
	Min.	Nom.	Max.
A	—	—	0.80
A_1	0.00	0.02	0.05
A_3	0.203 REF.		
b	0.20	0.25	0.30
D	7.00 BSC		
E	7.00 BSC		
e	0.50 BSC		
L	0.30	0.40	0.50
K	0.20	—	—
D_2	5.50	5.55	5.60
E_2	5.50	5.55	5.60
aaa	0.15		
bbb	0.10		
ccc	0.10		
ddd	0.05		
eee	0.08		
fff	0.10		

© 2020 Renesas Electronics Corporation. All rights reserved.

BIG IDEAS FOR EVERY SPACE RENESAS

7x7mm 48pin HWQFN package drawing (Current)

JEITA Package Code	RENESAS Code	Previous Code	MASS (Typ) [g]
P-HWQFN48-7x7-0.50	PWQN0048KB-A	48PJN-A P48K8-50-5B4-7	0.13

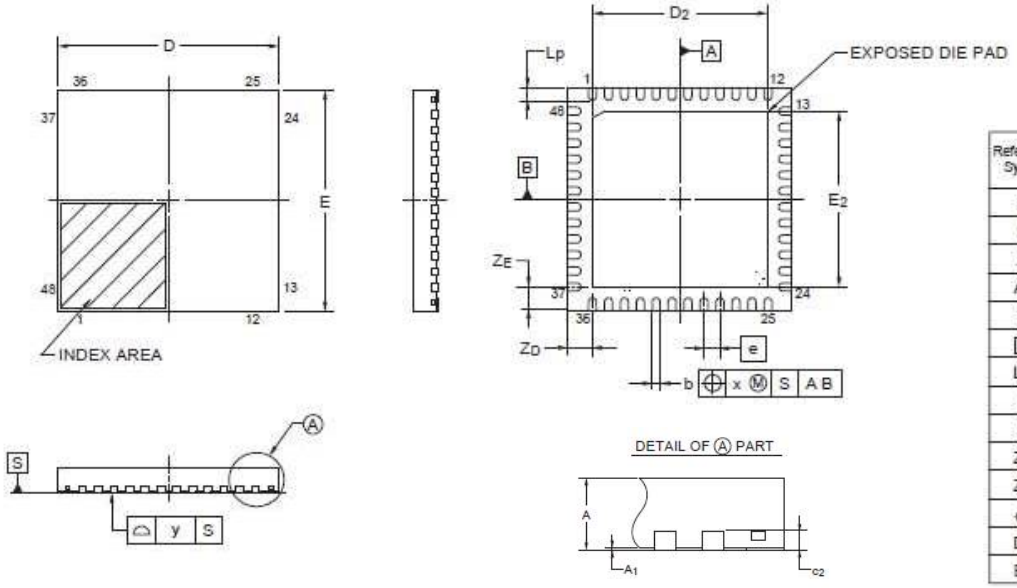

Reference Symbol	Dimensions in millimeters		
	Min	Nom	Max
D	6.95	7.00	7.05
E	6.95	7.00	7.05
A	—	—	0.80
A_1	0.00	—	—
b	0.18	0.25	0.30
e	—	0.50	—
Lp	0.30	0.40	0.50
x	—	—	0.05
y	—	—	0.05
Z_D	—	0.75	—
Z_E	—	0.75	—
c_2	0.15	0.20	0.25
D_2	—	5.50	—
E_2	—	5.50	—

© 2020 Renesas Electronics Corporation. All rights reserved.

BIG IDEAS FOR EVERY SPACE RENESAS

Dimension comparison: 7x7mm 48pin HWQFN package

JEDEC notation will be used instead of the conventional notation.

New Symbol	7x7mm 48pin HWQFN			Current Symbol	7x7mm 48pin HWQFN		
	Dimension in Millimeters				Dimension in Millimeters		
	Min	Nom	Max		Min	Nom	Max
A	-	-	0.80	A	-	-	0.80
A1	0.00	0.02	0.05	A1	0.00	-	-
A3	0.203 REF.			C2	0.15	0.20	0.25
b	0.20	0.25	0.30	b	0.18	0.25	0.30
D	7.00 BSC			E	6.95	7.00	7.05
E	7.00 BSC			D	6.95	7.00	7.05
e	0.50 BSC			e	-	0.50	-
L	0.30	0.40	0.50	Lp	0.30	0.40	0.50
K	0.20	-	-	-	-	-	-
D2	5.50	5.55	5.60	E2	-	5.50	-
E2	5.50	5.55	5.60	D2	-	5.50	-
-	-	-	-	ZD	-	0.75	-
-	-	-	-	ZE	-	0.75	-
aaa	0.15			-	-	-	-
bbb	0.10			x	-	-	0.05
ccc	0.10			-	-	-	-
ddd	0.05			-	-	-	-
eee	0.08			y	-	-	0.05
fff	0.10			-	-	-	-

© 2020 Renesas Electronics Corporation. All rights reserved.

BIG IDEAS FOR EVERY SPACE RENESAS

8x8mm 64pin HWQFN package drawing (New)

JEITA Package code	RENESAS code	MASS(TYP.)[g]
P-HWQFN064-8x8-0.40	PWQN0064LB-A	0.18

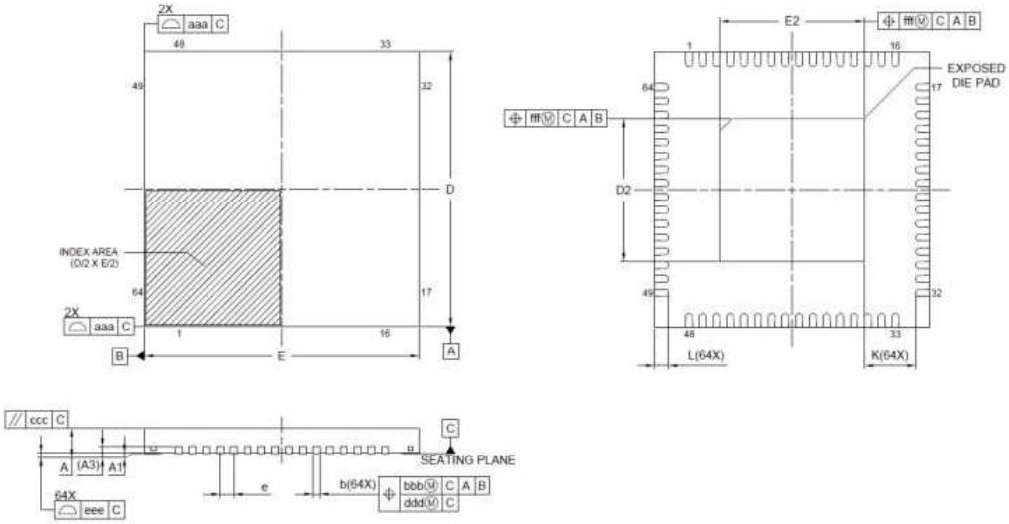

Reference Symbol	Dimension in Millimeters		
	Min.	Nom.	Max.
A	—	—	0.80
A_1	0.00	0.02	0.05
A_3	0.203 REF.		
b	0.15	0.20	0.25
D	8.00 BSC		
E	8.00 BSC		
e	0.40 BSC		
L	0.35	0.40	0.45
K	0.20	—	—
D_2	4.15	4.20	4.25
E_2	4.15	4.20	4.25
aaa	0.10		
bbb	0.07		
ccc	0.10		
ddd	0.05		
eee	0.08		
fff	0.10		

© 2020 Renesas Electronics Corporation. All rights reserved.

BIG IDEAS FOR EVERY SPACE RENESAS

8x8mm 64pin HWQFN package drawing (Current)

JEITA Package Code	RENESAS Code	Previous Code	MASS (Typ) [g]
P-HWQFN64-8x8-0.40	PWQN0064LA-A	P64K8-40-9B5-4	0.16

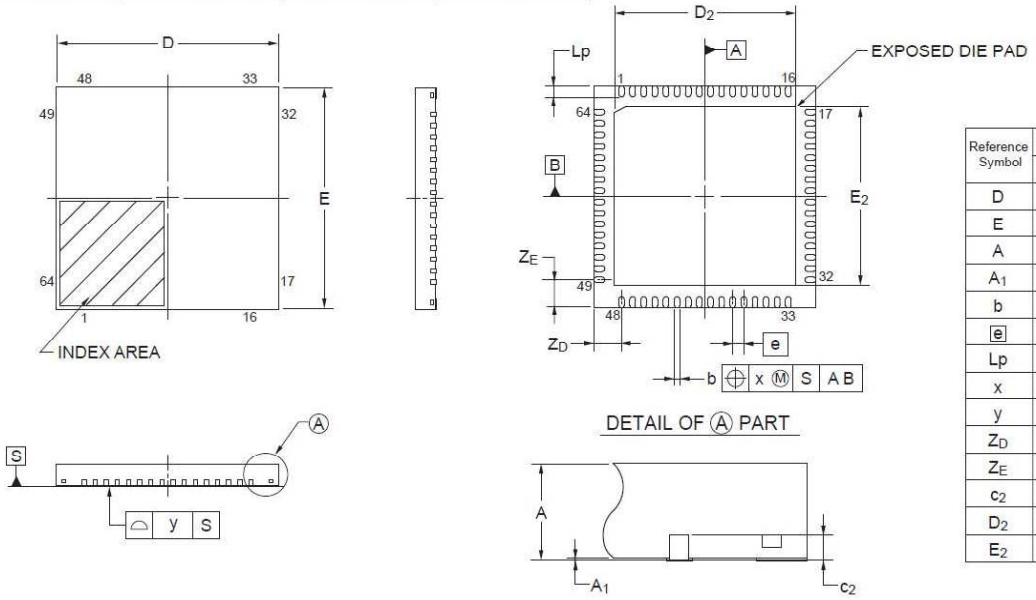

Reference Symbol	Dimensions in millimeters		
	Min	Nom	Max
D	7.95	8.00	8.05
E	7.95	8.00	8.05
A	—	—	0.80
A_1	0.00	—	—
b	0.17	0.20	0.23
e	—	0.40	—
Lp	0.30	0.40	0.50
x	—	—	0.05
y	—	—	0.05
Z_D	—	1.00	—
Z_E	—	1.00	—
c_2	0.15	0.20	0.25
D_2	—	6.50	—
E_2	—	6.50	—

© 2020 Renesas Electronics Corporation. All rights reserved.

BIG IDEAS FOR EVERY SPACE RENESAS

Dimension comparison: 8x8mm 64pin HWQFN package

JEDEC notation will be used instead of the conventional notation.

New Symbol	8x8mm 64pin HWQFN PWQN0064??-A			Current Symbol	8x8mm 64pin HWQFN PWQN0064LA-A		
	Dimension in Millimeters				Dimension in Millimeters		
	Min	Nom	Max		Min	Nom	Max
A	-	-	0.80	A	-	-	0.80
A1	0.00	0.02	0.05	A1	0.00	-	-
A3	0.203 REF.			C2	0.15	0.20	0.25
b	0.20	0.25	0.30	b	0.18	0.25	0.30
D	8.00 BSC			E	7.95	8.00	8.05
E	8.00 BSC			D	7.95	8.00	8.05
e	0.40 BSC			e	-	0.40	-
L	0.30	0.40	0.50	Lp	0.30	0.40	0.50
K	0.20	-	-	-	-	-	-
D2	4.15	4.20	4.25	E2	-	6.50	-
E2	4.15	4.20	4.25	D2	-	6.50	-
-	-	-	-	ZD	-	1.00	-
-	-	-	-	ZE	-	1.00	-
aaa	0.10			-	-	-	-
bbb	0.07			x	-	-	0.05
ccc	0.10			-	-	-	-
ddd	0.05			-	-	-	-
eee	0.08			y	-	-	0.05
fff	0.10			-	-	-	-

© 2020 Renesas Electronics Corporation. All rights reserved.

BIG IDEAS FOR EVERY SPACE RENESAS

Appearance

Comparison with ATJ Kumamoto

※Example of 4x4mm 24pin
Character is reference example

	Package surface	Package back	Package side
New		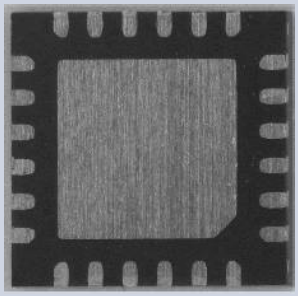	
Current		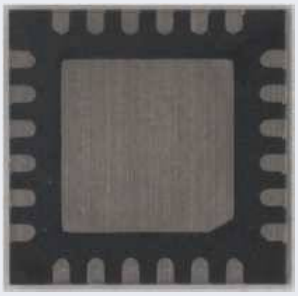	

© 2020 Renesas Electronics Corporation. All rights reserved.

BIG IDEAS FOR EVERY SPACE RENESAS

Appearance

Comparison with ATJ Hakodate

※Example of 5x5mm 32pin
Character is reference example

	Package surface	Package back	Package side
New		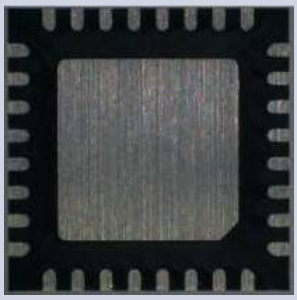	
Current		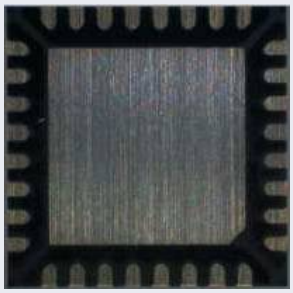	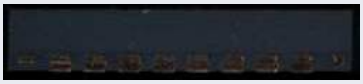

© 2020 Renesas Electronics Corporation. All rights reserved.

BIG IDEAS FOR EVERY SPACE RENESAS

Package structure image

* Package Section and die pad shape is a reference example.

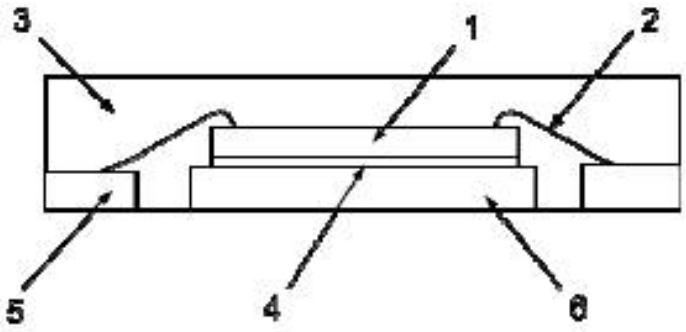

No.	部材 Part
1	チップ Die
2	ワイヤ Wire
3	封止材 Molding material
4	ダイアタッチ材 Die attach material
5	Cu リード:Ni/Pd/Au めっき Cu lead:Ni/Pd/Au plating
6	ダイパッド Die pad

*The materials are different because they use materials certified at the site, but the structure is equivalent.

© 2020 Renesas Electronics Corporation. All rights reserved.

BIG IDEAS FOR EVERY SPACE RENESAS

LASER VISIBILITY

Comparison with ATJ Kumamoto

※Character is reference example

Assembly site	New	Current
Whole Photo		
Detail Photo		

© 2020 Renesas Electronics Corporation. All rights reserved.

BIG IDEAS FOR EVERY SPACE RENESAS

LASER VISIBILITY

Comparison with ATJ Hakodate

※Character is reference example

Assembly site	New	Current
Whole Photo		
Detail Photo		

© 2020 Renesas Electronics Corporation. All rights reserved.

BIG IDEAS FOR EVERY SPACE RENESAS

Packing specifications (tray)_Tray order

Assembly site	Order of Devices
New	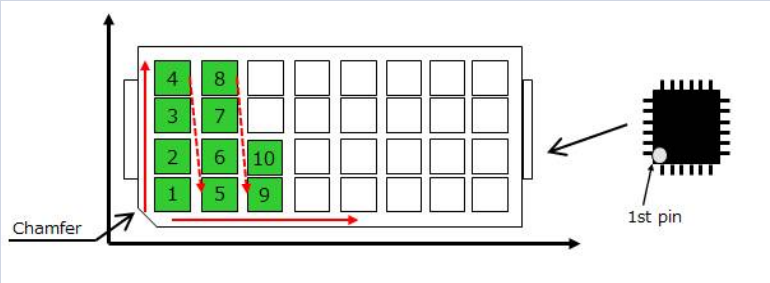
Current	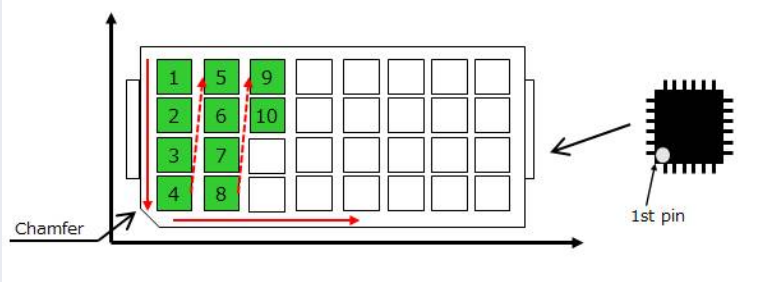

© 2020 Renesas Electronics Corporation. All rights reserved.

BIG IDEAS FOR EVERY SPACE RENESAS

PACKING SPECIFICATION (TRAY)_4mm×4mm 24pin HWQFN

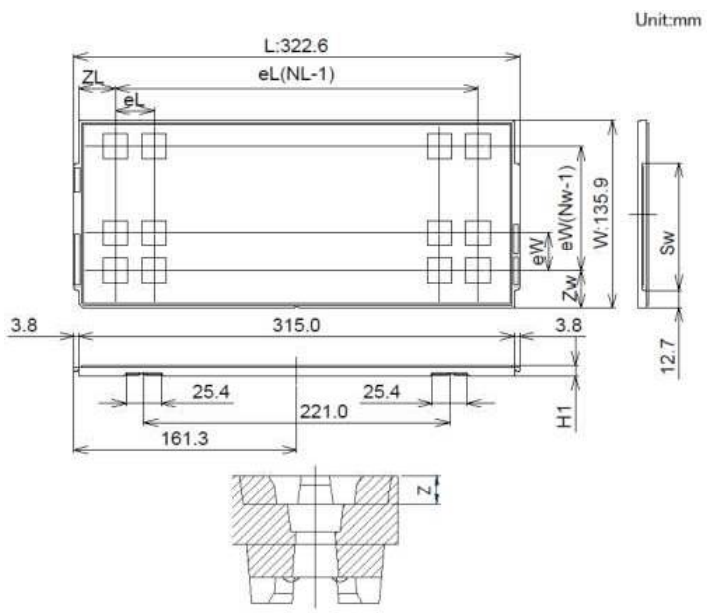

Tray Code		New	Current
		EAM040401-10	QJ-041 Rev.A
Position dimension of cells	Z	1.55	1.425
	Zw	8.15	8.15
	ZL	7.90	7.90
	eW	9.20	9.20
	eL	8.80	8.80
	Sw	92.10	92.10
Thickness (mm)	H1	7.62	7.62
Number of cells	Nw	14	14
	NL	35	35
Maximum storage pcs IC/Tray		490	490
Maximum storage pcs IC/Inner box		3920	3920
Material		Carbon PPE	Carbon PPE
Heat resistant temperature		135°C MAX	135°C MAX
JEDECorCustom		JEDEC	JEDEC
Surface resistance		Less than $1x10^{11}\Omega/\square$	Less than $1x10^{11}\Omega/\square$

© 2020 Renesas Electronics Corporation. All rights reserved.

BIG IDEAS FOR EVERY SPACE RENESAS

PACKING SPECIFICATION (TRAY)_5mm×5mm 32pin HWQFN

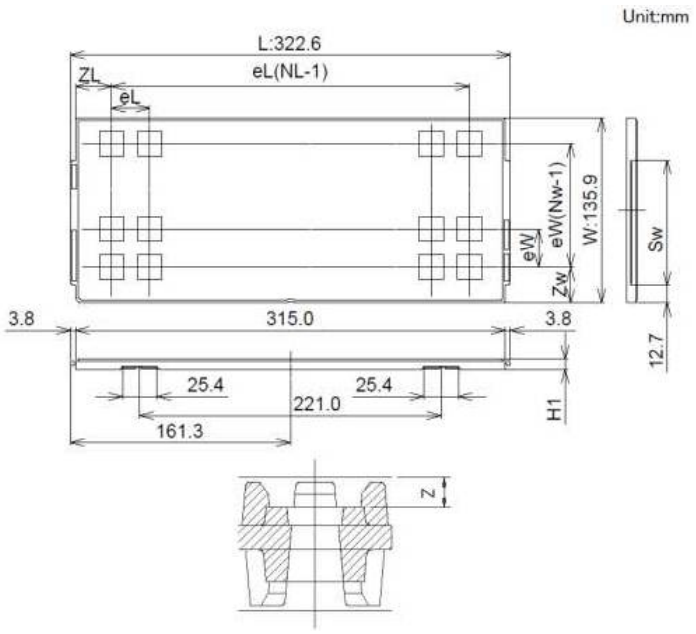

Tray Code		New	Current
		EAM050501-10	Rev.B EAM050503-10
Position dimension of cells	Z	1.75	1.50
	Zw	8.15	8.15
	ZL	7.90	7.90
	eW	9.20	9.20
	eL	8.80	8.80
	Sw	92.10	92.10
Thickness (mm)	H1	7.62	7.62
Number of cells	Nw	14	14
	NL	35	35
Maximum storage pcs IC/Tray		490	490
Maximum storage pcs IC/Inner box		3920	3920
Material		Carbon PPE	Carbon PPE
Heat resistant temperature		135°C MAX	135°C MAX
JEDECorCustom		JEDEC	JEDEC
Surface resistance		Less than $1x10^{11}\Omega/\square$	Less than $1x10^{11}\Omega/\square$

© 2020 Renesas Electronics Corporation. All rights reserved.

BIG IDEAS FOR EVERY SPACE RENESAS

PACKING SPECIFICATION (TRAY)_6mm×6mm 40pin HWQFN

No change from current product

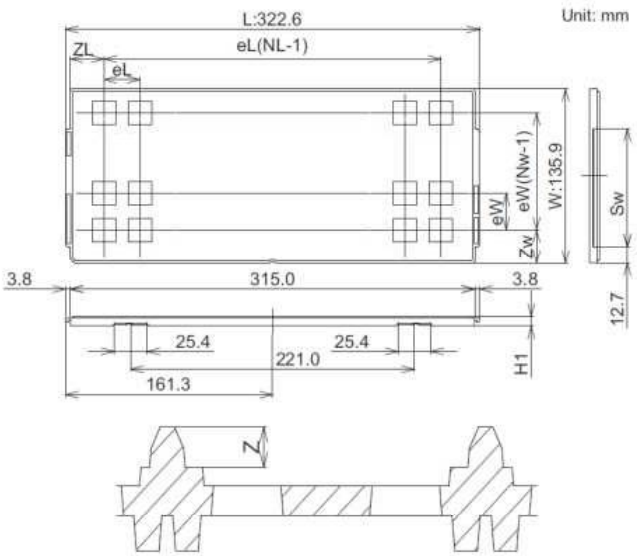

Tray Code		Current / New
		EAM0606-10 Rev.C
Position dimension of cells	Z	1.35
	Zw	8.15
	ZL	7.90
	eW	9.20
	eL	8.80
	Sw	92.10
Thickness (mm)	H1	7.62
Number of cells	Nw	14
	NL	35
Maximum storage pcs IC/Tray		490
Maximum storage pcs IC/Inner box		3920
Material		Carbon PPE
Heat resistant temperature		135°C MAX
JEDECorCustom		JEDEC
Surface resistance		Less than $1x10^{11}\Omega/\square$

© 2020 Renesas Electronics Corporation. All rights reserved.

BIG IDEAS FOR EVERY SPACE RENESAS

PACKING SPECIFICATION (TRAY)_7mm×7mm 48pin HWQFN

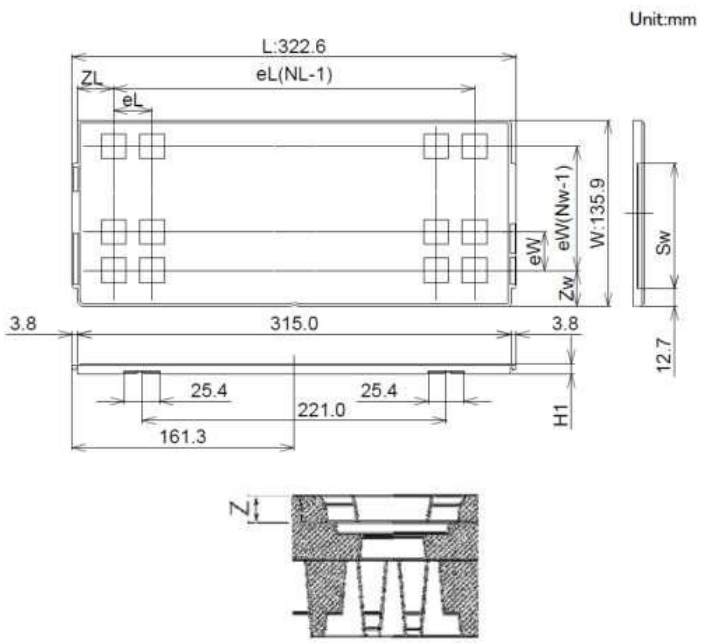

Tray Code		New	Current
		REV.C EAG0707-10	Rev.A EAM0707-10
Position dimension of cells	Z	1.40	1.55
	Zw	11.55	10.35
	ZL	11.80	10.00
	eW	9.40	12.80
	eL	9.40	11.80
	Sw	92.10	92.10
Thickness (mm)	H1	7.62	7.62
Number of cells	Nw	13	10
	NL	32	26
Maximum storage pcs IC/Tray		416	260
Maximum storage pcs IC/Inner box		3328	2080
Material		Carbon PPE	Carbon PPE
Heat resistant temperature		135°C MAX	135°C MAX
JEDECorCustom		JEDEC	JEDEC
Surface resistance		Less than $1x10^{11}\Omega/\square$	Less than $1x10^{11}\Omega/\square$

© 2020 Renesas Electronics Corporation. All rights reserved.

BIG IDEAS FOR EVERY SPACE RENESAS

PACKING SPECIFICATION (TRAY)_8mm×8mm 64pin HWQFN

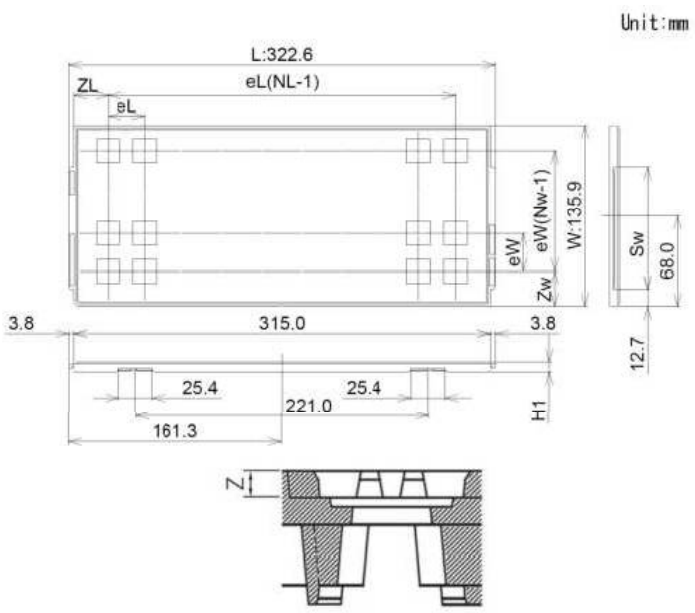

Tray Code		New	Current
		REV. E EA70808-10	EAM0808-10 Rev. A
Position dimension of cells	Z	1.50	1.45
	Zw	10.75	10.35
	ZL	11.90	10.00
	eW	10.40	12.80
	eL	10.40	11.80
	Sw	92.10	92.10
Thickness (mm)	H1	7.62	7.62
Number of cells	Nw	12	10
	NL	29	26
Maximum storage pcs IC/Tray		348	260
Maximum storage pcs IC/Inner box		2784	2080
Material		Carbon PPE	Carbon PPE
Heat resistant temperature		135ºC MAX	135ºC MAX
JEDECorCustom		JEDEC	JEDEC
Surface resistance		Less than $1x10^{11}\Omega/\square$	Less than $1x10^{11}\Omega/\square$

© 2020 Renesas Electronics Corporation. All rights reserved.

BIG IDEAS FOR EVERY SPACE RENESAS

PACKING SPECIFICATIONS (EMBOSS TAPING)_4mm×4mm 24pin HWQFN

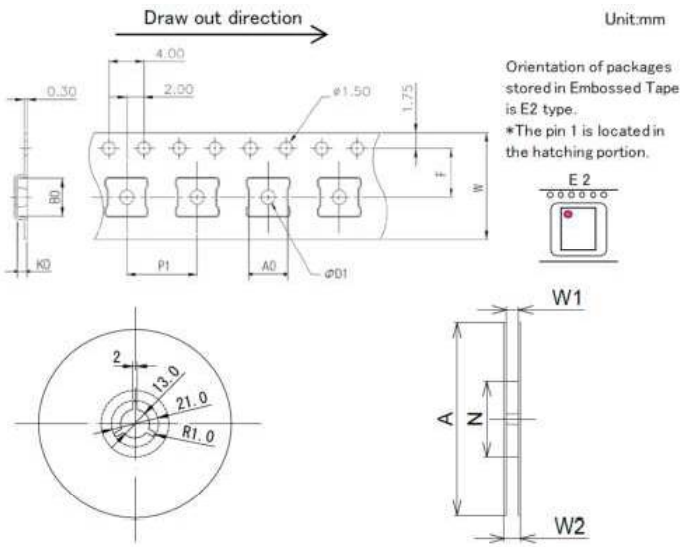

Tape Code		New	Current
		ECQFN0404-A20	E12*08-C2CA
Tape Dimensions (mm)	W	12.0	12.0
	P1	8.0	8.0
	A0	4.25	4.3
	B0	4.25	4.3
	K0	1.1	1.0
	F	5.5	5.5
	D1	1.6	1.5
Reel Dimensions (mm)	A	330	330
	N	96.5	100
	W1	12.8	13.5
	W2	18.2	17.5
Maximum storage Pcs. IC/ Reel		2500	2500
Material		Carbon PS	Carbon PS
Surface resistance		Less than $1x10^{11}\Omega/\square$	Less than $1x10^{11}\Omega/\square$

	New	Current
Desiccant		

* Desiccant change

Desiccant is changed, but there is no change in the storage period.
Shape or the like might be changed.

© 2020 Renesas Electronics Corporation. All rights reserved.

BIG IDEAS FOR EVERY SPACE RENESAS

PACKING SPECIFICATIONS (EMBOSS TAPING)_5mm×5mm 32pin HWQFN

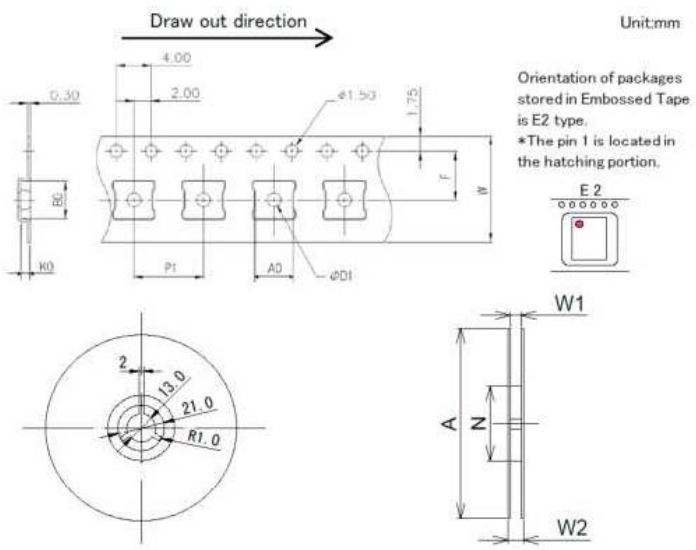

Tape Code		New	Current: Kumamoto	Current: Hakodate
		ECPKG0505-151	E12*08-B8CA	2J-506-2401
Tape Dimensions (mm)	W	12.0	12.0	12.0
	P1	8.0	8.0	8.0
	A0	5.3	5.3	5.25
	B0	5.3	5.3	5.25
	K0	1.1	1.0	1.1
	F	5.5	5.5	5.5
	D1	1.6	1.5	**1.5**
Reel Dimensions (mm)	A	330	330	330
	N	96.5	100	100
	W1	12.8	13.5	13.4
	W2	18.2	17.5	17.4
Maximum storage Pcs. IC/ Reel		2500	2500	5000
Material		Carbon PS	Carbon PS	Carbon PS
Surface resistance		Less than $1x10^{11}\Omega/\square$	Less than $1x10^{11}\Omega/\square$	Less than $1x10^{11}\Omega/\square$

	New	Current
Desiccant		

* Desiccant change

Desiccant is changed, but there is no change in the storage period.
Shape or the like might be changed.

© 2020 Renesas Electronics Corporation. All rights reserved.

BIG IDEAS FOR EVERY SPACE RENESAS

PACKING SPECIFICATIONS (EMBOSS TAPING)_6mm×6mm 40pin HWQFN

Unit:mm

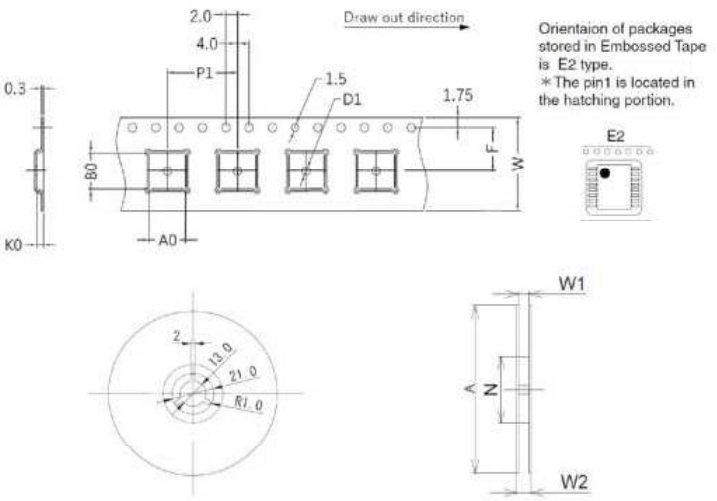

Tape Code		New	Current
		ATC-QFN0606-A410.PB	E16* 12-C3CA
Tape Dimensions (mm)	W	16.0	16.0
	P1	12.0	12.0
	A0	6.3	6.3
	B0	6.3	6.3
	K0	1.1	1.0
	F	7.5	7.5
	D1	1.5	1.5
Reel Dimensions (mm)	A	330	330
	N	96.5	100
	W1	16.8	17.5
	W2	22.2	21.5
Maximum storage Pcs. IC/ Reel		2500	2500
Material		Carbon PS	Carbon PS
Surface resistance		Less than $1x10^{11}\Omega/\square$	Less than $1x10^{11}\Omega/\square$

	New	Current
Desiccant		

* Desiccant change

Desiccant is changed, but there is no change in the storage period.
Shape or the like might be changed.

© 2020 Renesas Electronics Corporation. All rights reserved.

BIG IDEAS FOR EVERY SPACE RENESAS

PACKING SPECIFICATIONS (EMBOSS TAPING)_7mm×7mm 48pin HWQFN

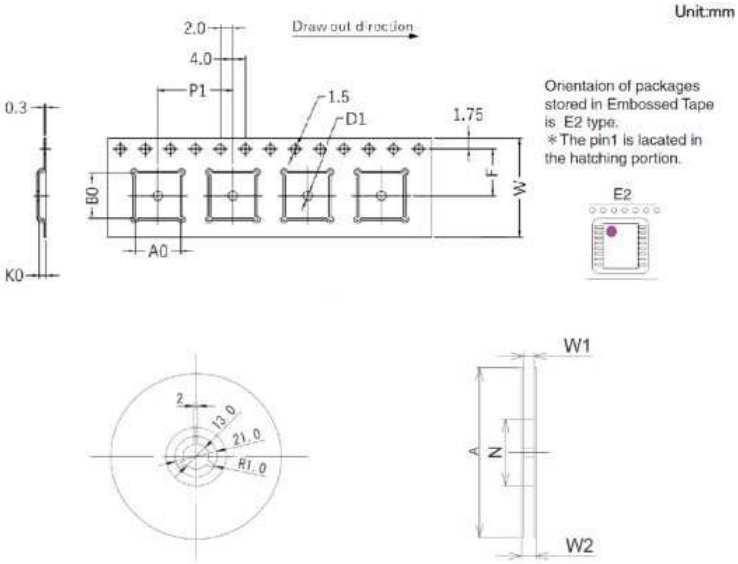

Tape Code		New	Current
		ACT-QFN0707-A410.PB	E16* 12-B9CA
Tape Dimensions (mm)	W	16.0	16.0
	P1	12.0	12.0
	A0	7.25	7.3
	B0	7.25	7.3
	K0	1.1	1.0
	F	7.5	7.5
	D1	1.5	1.55
Reel Dimensions (mm)	A	330	330
	N	96.5	100
	W1	16.8	17.5
	W2	22.2	21.5
Maximum storage Pcs. IC/ Reel		2500	2500
Material		Carbon PS	Carbon PS
Surface resistance		Less than $1x10^{11}\Omega/\square$	Less than $1x10^{11}\Omega/\square$

	New	Current
Desiccant		

* Desiccant change

Desiccant is changed, but there is no change in the storage period.
Shape or the like might be changed.

© 2020 Renesas Electronics Corporation. All rights reserved.

BIG IDEAS FOR EVERY SPACE RENESAS

PACKING SPECIFICATIONS (EMBOSS TAPING)_8mm×8mm 64pin HWQFN

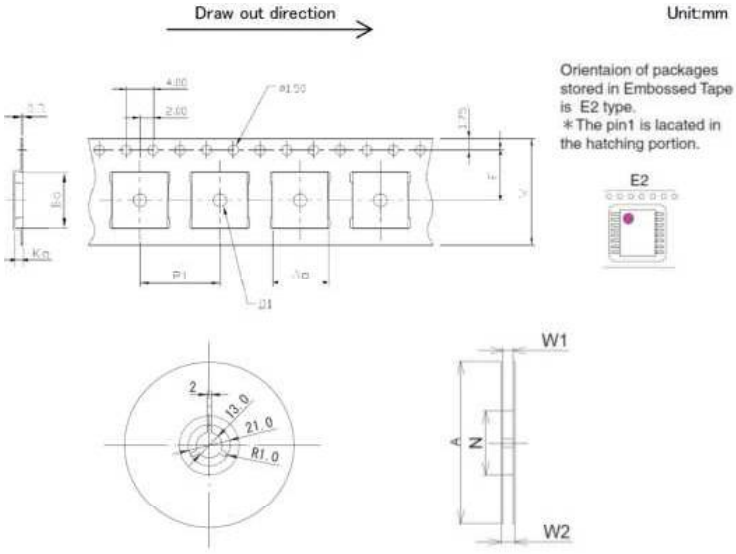

Tape Code		New	Current
		EC70800801-112	E16*12-C0CA
Tape Dimensions (mm)	W	16.0	16.0
	P1	12.0	12.0
	A0	8.3	8.3
	B0	8.3	8.3
	K0	1.2	1.0
	F	7.5	7.5
	D1	**2.0**	1.5
Reel Dimensions (mm)	A	330	330
	N	96.5	100
	W1	16.8	17.5
	W2	22.2	21.5
Maximum storage Pcs. IC/ Reel		2500	2500
Material		Carbon PS	Carbon PS
Surface resistance		Less than $1x10^{11}\Omega/\square$	Less than $1x10^{11}\Omega/\square$

	New	Current
Desiccant		

* Desiccant change

Desiccant is changed, but there is no change in the storage period.
Shape or the like might be changed.

© 2020 Renesas Electronics Corporation. All rights reserved.

BIG IDEAS FOR EVERY SPACE RENESAS

4M changing points

Change of material (Au to Cu) assembly and sorting factory

Item	Check result	Judgement
Machine	Changing at assembly and sorting. The machines are equivalent to present machines. To prevent copper wire oxidization, inert gas is used to wire bonding process. There are production results of copper wire products in new site and we have already checked there is no risk at the start of this product's production.	**No risk**
Method	Bonding method (thermosonic bonding) and process flow for the Cu wiring are same as the Au wiring.	**No risk**
Man	Using operator certification system. Only certificated operator can work for the production.	**No risk**
Material	Using only certificated copper wire. And applying certificated lead frame, die attach epoxy and mold compound for copper wire products. The products has been certificated by reliability test same as gold wire products and have no risk.	**No risk**

© 2020 Renesas Electronics Corporation. All rights reserved.

BIG IDEAS FOR EVERY SPACE RENESAS

Renesas.com

© 2020 Renesas Electronics Corporation. All rights reserved.