Process Change Notification

Issue No. MPD-20-001
Issue Date : 16th Apr. 2020

TO :
Future Electronics

ROHM Co., Ltd
Middle Power Devce Div.
Div.Manager: Toshio Nakajima
Power Device Quality Control Div.
Div. Manager : Hiroaki Minato

PCN information : Regarding additional Assembly production site of Power Diode products

Dear Sir.
Thank you for making good. We would like to ask the approval for the process change as below.
Please confirm and be so kind to answer , using the following format.

Application	Object Product : PMDU、PMDT、PMDTM、PMDS		
Information of process changing notification	Before Production site	After Additional Assembly production site	Remark
	Wafer production site ROHM Shiga Factory,ROHM Wako LAPIS Semiconductor Miyazaki Packaging Assembly site ROHM Wako ROHM-Wako Electronics (Malaysia) Sdn.Bhd. ROHM Semiconductor (China) Co.,Ltd.	Wafer production site ROHM Shiga Factory,ROHM Wako Packaging Assembly site PANJIT-China PANJIT-Taiwan	There is no difference on Quality issue (included electrical characteristics) and reliability issue between ROHM products and PANJIT products.
	•Comparison of 4M change point We have authorized production control system of PANJIT site (OSAT) as ROHM production site already. Here is a table of differences of 4M for production.		

4M category	Products on PANJIT site	Products on ROHM site
Man	Authorized operator by PANJIT. The operator who has authorized by the rule and system on PANJIT is only able to work at production. There is no problem for the production.	Authorized operator by ROHM system. The operator who has authorized by the company rule and system on ROHM is only able to work at production.
Machine	Using Semi-automated equipment selected by PANJIT. The preventive maintenance has been conducted based on the PANJIT standard. There is no problem.	Using Full-automated equipment selected by ROHM The preventive maintenance has been conducted based on the ROHM standard.
Method	There is no problem on the process based on process evaluation result data. Also the QC table and work standard established on each process and every works has been followed it.	The QC table and work standard established on each process based on ROHM standard and every works has been followed it.
Material	The material that was selected by PANJIT and passed by evaluation at ROHM has been used in the production. There is no problem for the material.	The material that was selected by ROHM and passed the process evaluation has been used in the production.

ROHM Co., Ltd. guarantees the quality of assembled products as well as conventional products.

Reason for change	In order to enhance supply capacity by adding outsourced assembly manufacturing bases due to production restrictions at the package assembly factory (Malaysia factory)
Estimated changing time	At any time after PCN accepted by customer.

* We will change the products with your agreement if we have not received your answer within 2 month after issued the document.

The Reply of Process Change Notification

ATTN : ROHM CO.,LTD. Power Device Quality Control Div.

PCN information : Regarding additional Assembly production site of Power Diode products

Please find our response regarding the above application. MPD-20-001

Answer	1. Approve your application. 2. Approve with certain condition.	Date :
	Condition	

Issue	Approval

OSAT PDI Part list

得意先ｺｰﾄﾞ	得意先略称	事業部	現行品番orローム短縮形名	品種１名orパッケージ名
16189	I/FUTURE.	PD	RB168LAM100TR	PMDTM
16189	I/FUTURE.	PD	RBR1LAM60ATR	PMDTM
16189	I/FUTURE.	PD	RB070M-30TR	PMDU
16189	I/FUTURE.	PD	RB160M-90TR	PMDU
16189	I/FUTURE.	PD	RB168M150TR	PMDU
16189	I/FUTURE.	PD	RF071M2STR	PMDU
16189	I/FUTURE.	PD	RR264M-400TR	PMDU
16189	I/FUTURE.	PD	RB160MM-30TR	PMDUM
16189	I/FUTURE.	PD	RB160MM-40TR	PMDUM
16189	I/FUTURE.	PD	RF071MM2STR	PMDUM
16189	I/FUTURE.	PD	RR264MM-400TR	PMDUM
16189	I/FUTURE.	PD	RB050L-40TE25	PSM
16189	I/FUTURE.	PD	RB050L-60TE25	PSM
16189	I/FUTURE.	PD	RB051L-40TE25	PSM
16189	I/FUTURE.	PD	RB081L-20TE25	PSM
16189	I/FUTURE.	PD	RB160L-40TE25	PSM
16189	I/FUTURE.	PD	RB160L-60TE25	PSM
16189	I/FUTURE.	PD	RB161L-40TE25	PSM
16189	I/FUTURE.	PD	RF08L6STE25	PSM
16189	I/FUTURE.	PD	RF101L2STE25	PSM
16189	I/FUTURE.	PD	RF201L2STE25	PSM
16189	I/FUTURE.	PD	RSX501L-20TE25	PSM

DO-214AC PMDS Package
Comparison between Rohm - OEM (PANJIT)

9th April 2020
Power Device Business HQ
Middle Power Device Business Div.

Rev.1.3

© 2020 ROHM Co.,Ltd.

Outline

List of Differences

Item	ROHM Product	OEM (PANJIT)
	DO-214AC (PMDS/SMA)	DO-214AC (SMA)
Back End Facility	ROHM Semiconductor (China) Co.,Ltd. ROHM-Wako Electronics (Malaysia) Sdn. Bhd.	PAN JIT – China
Dimension	**Different *Please see detail in Page 2**	
Foot Print	No Differences	
Terminal Process	Dip Sn-3Ag-0.5Cu	Electroplating Sn 100%
Marking Process	Laser Marking – Mask Type	Laser Marking – Scan Type
Marking Symbol	**Different *Please see detail in Page 3**	
Inner Structure	Solder Interlocking Type (Marking Side : Anode)	Solder Interlocking Type (Marking Side : Cathode) ***Please see detail in Page 4**
Resin	Halogen Contained	Halogen Free
Internal Chip	No Changes	
Reel / Taping	**Different *Please see detail in Page 5-6**	
Packing Material	**Different *Please see detail in Page 7**	
Absolute Max	No Changes	
Electric Characteristics	No Changes	

© 2020 ROHM Co.,Ltd.

Dimension Specification / Recommended Foot Print

Item	ROHM Product	OEM (PANJIT)
	DO-214AC (PMDS/SMA)	DO-214AC (SMA)
Dimension	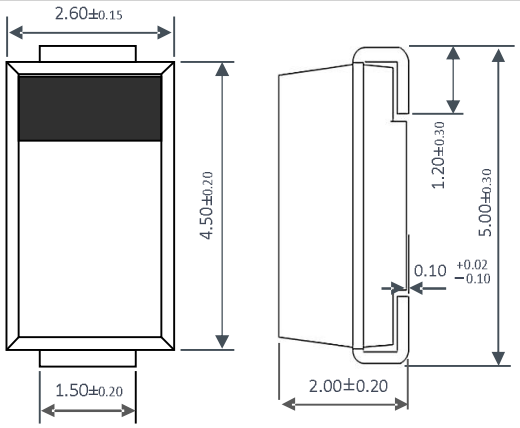	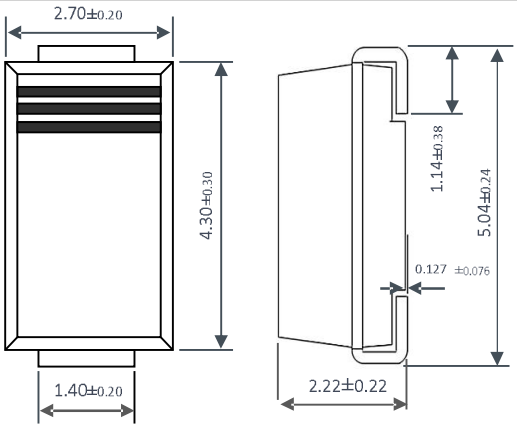
Recommended Foot Print	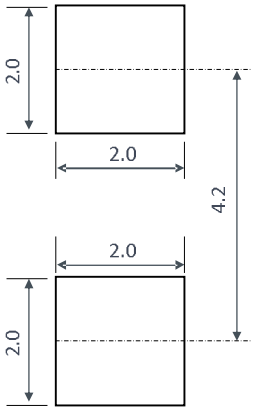	

© 2020 ROHM Co.,Ltd.

Marking Specification

Item	ROHM Product	OEM (PANJIT)
	DO-214AC (PMDS/SMA)	DO-214AC (SMA)
Marking	■Zener Diode ※Factory is shown by the form of letters 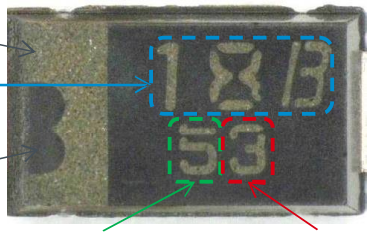 ■Other Diode ※Factory is shown by the form of letters 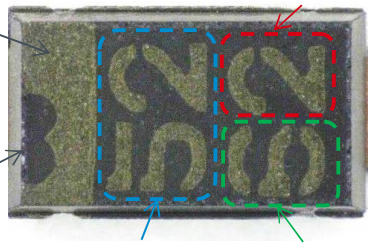 	■Zener Diode 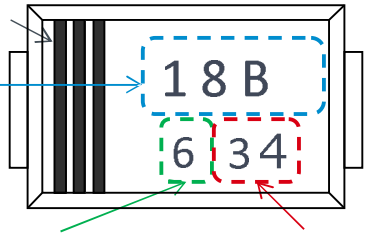 ■Other Diode 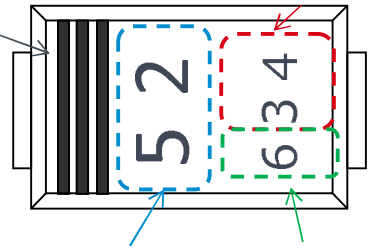

© 2020 ROHM Co.,Ltd.

Inner Structure

Item	ROHM Product	OEM (PANJIT)
	DO-214AC (PMDS/SMA)	DO-214AC (SMA)

Inner Structure

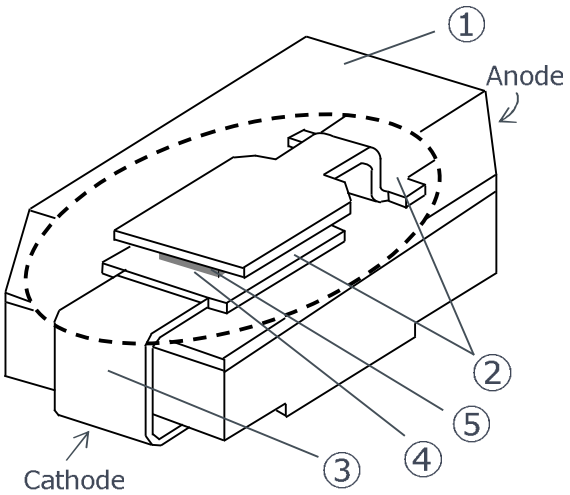

No.	Item	Material
①	Compounds	Epoxy (Halogen Contained)
②	Lead Frame	Cu / No first plating
③	External Plating	Solder Dip (Sn-3Ag-0.5Cu)
④	Die Attach	Die Bonding Material (Sn-Ag-Pb) (Not subject to RoHS)
⑤	Die	Silicon

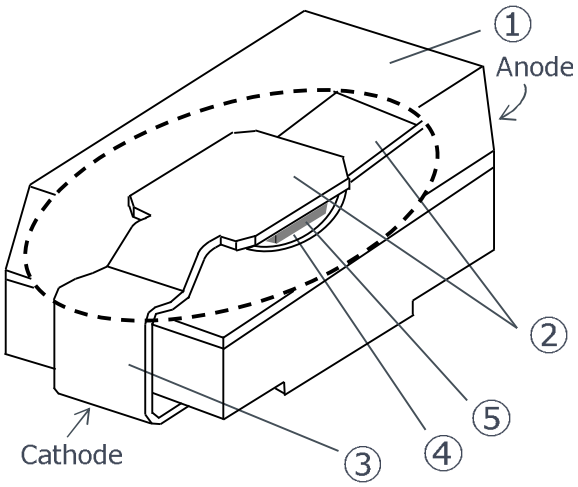

No.	Item	Material
①	Compounds	Epoxy (Halogen Free)
②	Lead Frame	Cu / No first plating
③	External Plating	Electroplating (Sn 100%)
④	Die Attach	Die Bonding Material (Sn-Ag-Pb) (Not subject to RoHS)
⑤	Die	Silicon

© 2020 ROHM Co.,Ltd.

Taping Specification

Item	ROHM Product	OEM (PANJIT)
	DO-214AC (PMDS/SMA)	DO-214AC (SMA)
Taping	■Taping Form 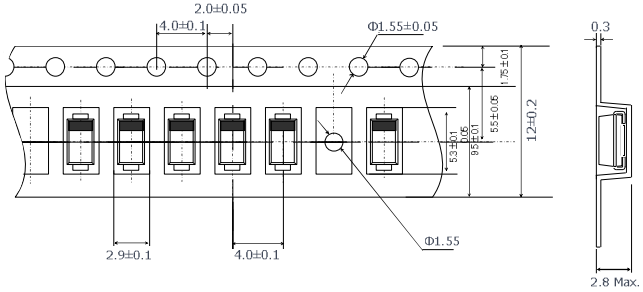 Note: 1.The beginning of taping contains adhesive taping (min. 600mm) and carrier taping with no parts (min. 110mm). 2.The end of taping contains carrier taping with no parts (min. 50mm)	■Taping Form 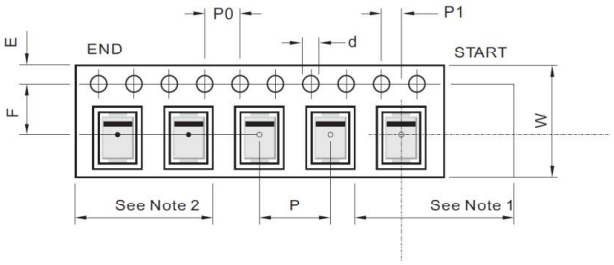 Note: 1.The beginning of taping contains adhesive taping (min. 230mm) and carrier taping with no parts (min. 160mm). 2.The end of taping contains carrier taping with no parts (min. 160mm)

Symbol	Size (mm)
d	1.55±0.05
E	1.75±0.10
F	5.50±0.1
P	4.00±0.10
P0	4.00±0.10
P1	2.00±0.1
W	12.00±0.3

© 2020 ROHM Co.,Ltd.

Reel Specification

Item	ROHM Product	OEM (PANJIT)
	DO-214AC (PMDS/SMA)	DO-214AC (SMA)
Reel	Umit:mm 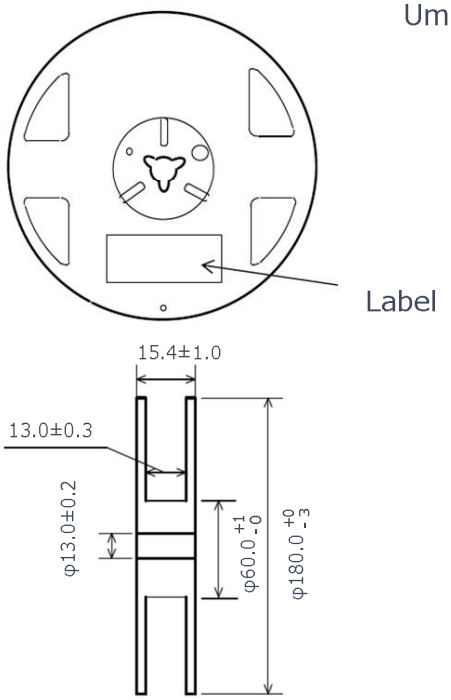 MOQ：1,500pcs/reel Color：White (Translucent)	Umit:mm 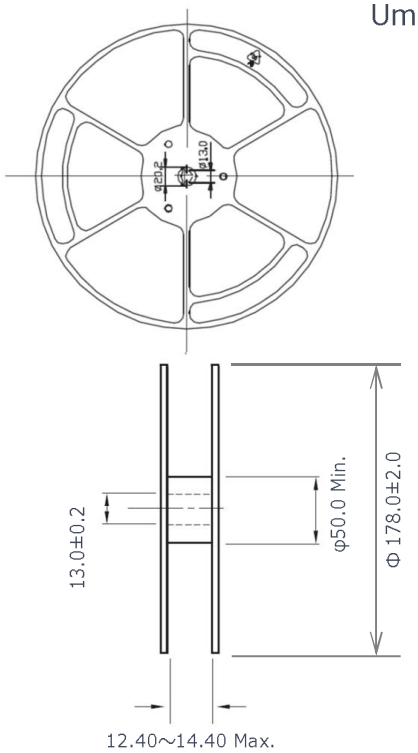 MOQ：1,800pcs/reel Color：Blue

© 2020 ROHM Co.,Ltd.

Packing Specification

Item	ROHM Product	OEM (PANJIT)
	DO-214AC (PMDS/SMA)	DO-214AC (SMA)
Packing	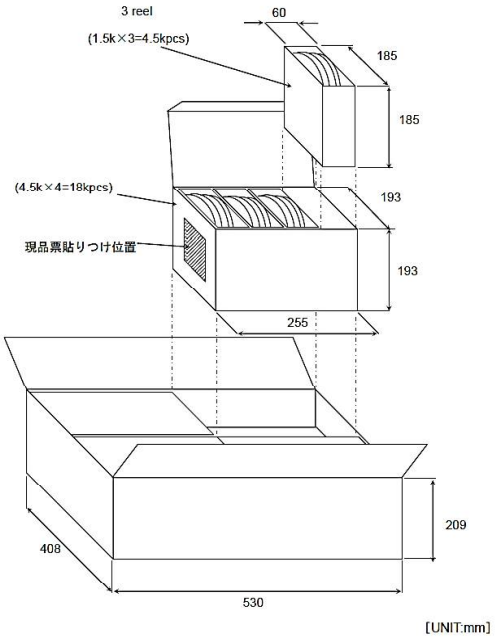 基準数量に満たない場合は、スペーサーを使用してリールがダンボール箱内を動くことを防ぐ。 **Item** / **Content** Inner Box: L x W x H (mm)：193 x 255 x 193 ＜1500pcs/reel x 12reels : Max.18.0kpcs ＞ Outer Box: L x W x H (mm)：408 x 530 x 209 ＜ 中箱 x 4box : Max.72.0kpcs ＞	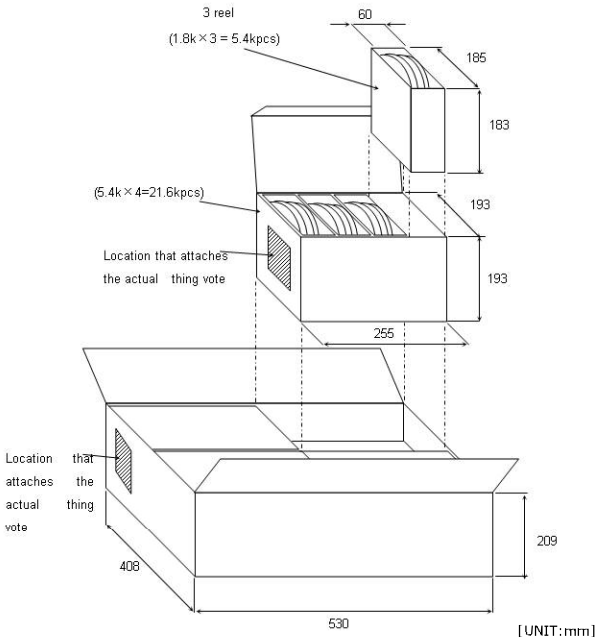 基準数量に満たない場合は、スペーサーを使用してリールがダンボール箱内を動くことを防ぐ。 **Item** / **Content** Inner Box: L x W x H (mm)：193 x 255 x 193 ＜1800pcs/reel x 12reels : Max.21.6kpcs ＞ Outer Box: L x W x H (mm)：408 x 530 x 209 ＜ 中箱 x 4box : Max.86.4kpcs ＞

© 2020 ROHM Co.,Ltd.

Affected Part Number List

Type	ROHM Product	OEM product
SBD	RB050L-40TE25	RB050LP-40
	RB050L-60TE25	RB050LP-60
	RB051L-40TE25	RB051LP-40
	RB055L-30TE25	RB055LP-30
	RB055L-40TE25	RB055LP-40
	RB055L-60TE25	RB055LP-60
	RB056L-40TE25	RB056LP-40
	RB058L150TE25	RB158LP150
	RB058L-40TE25	RB058LP-40
	RB058L-60TE25	RB058LP-60
	RB060L-40TE25	RB060LP-40
	RB068L100TE25	RB068LP100
	RB068L150TE25	RB068LP150
	RB068L-40TE25	RB068LP-40
	RB080L-30TE25	RB080LP-30
	RB081L-20TE25	RB081LP-20
	RB160L-40TE25	RB160LP-40
	RB160L-60TE25	RB160LP-60
	RB160L-90TE25	RB160LP-90
	RB161L-40TE25	RB161LP-40
	RB168L-40TE25	RB168LP-40
	RBR2L40ATE25	RBR2LP40A
	RBR2L60BTE25	RBR2LP60B
	RBR3L30BTE25	RBR3LP30B
	RBR5L30ATE25	RBR5LP30A
	RBR5L30BTE25	RBR5LP30A
	RBR5L40ATE25	RBR5LP40A
	RBR5L60ATE25	RBR5LP60A
	RSX201L-30TE25	RSX201LP-30
	RSX301L-30TE25	RSX301LP-30
	RSX501L-20TE25	RSX501LP-20

© 2020 ROHM Co.,Ltd.

Affected Part Number List

Type	ROHM Product	OEM Product
REC	1SR154-400TE25	1SR154-400P
	1SR154-600TE25	1SR154-600P
	1SR156-400TE25	1SR156-400P
	RR2L4STE25	RR2LP4S
	RR2L6STE25	RR2LP6S
FRD	RF071L4STE25	RF071LP4S
	RF081L2STE25	RF081LP2S
	RF08L6STE25	RF081LP6S
	RF101L2STE25	RF101LP2S
	RF101L4STE25	RF101LP4S
	RF201L2SGTE25	RF201LP2S
	RF201L2STE25	RF201LP2S
	RF2L6STE25	RF2LP6S
	RFN1L6STE25	RFN1LP6S
	RFN1L7STE25	RFN1LP7S
	RFN2L4STE25	RFN2LP4S
	RFN2L6STE25	RFN2LP6S

© 2020 ROHM Co.,Ltd.

ROHM SEMICONDUCTOR

ROHM Co.,Ltd.

© 2020 ROHM Co.,Ltd.

SOD-128 PMDTM Package
Comparison between Rohm - OEM

10th April 2020
Power Device Business HQ
Middle Power Device Business Div.

Rev.1.4

© 2020 ROHM Co.,Ltd.

Outline

List of Differences

Item	ROHM Product		OEM(PAN JIT)
	SOD-128 (PMDT/SMAF)	SOD-128 (PMDTM/SMAF)	SOD-128
Backend Facility	ROHM-Wako Electronics (Malaysia) Sdn. Bhd.	ROHM Wako(Japan) ROHM-Wako Electronics (Malaysia) Sdn. Bhd.	PAN JIT – Taiwan
Dimension	**Different *Please see detail in Page 2**		
Foot print	No Differences		
Terminal Process	Solder Dip(Sn-3Ag-0.5Cu)	No Differences (Electroplating：Sn 100%)	
Marking Process	Laser Mask	No Differences (Laser Marking-Scan Type)	
Marking Symbol	**Different *Please see detail in Page 3**		
Structure	No Differences (Solder Interlocking Type)		
Resin	Halogen	No Differences (Halogen Free)	
Element(Wafer)	No Differences		
Reel	**Different *Please see detail in Page 4/5**		
Packing Material	**Different *Please see detail in Page 6**		
Absolute Max.	No Differences		
Electric Characteristics	No Differences		

© 2020 ROHM Co.,Ltd.

Dimension Specification / Recommended Foot Print

Item	ROHM		OEM(PAN JIT)
	SOD-128 (PMDT/SMAF)	SOD-128 (PMDTM/SMAF)	SOD-128
Dimension	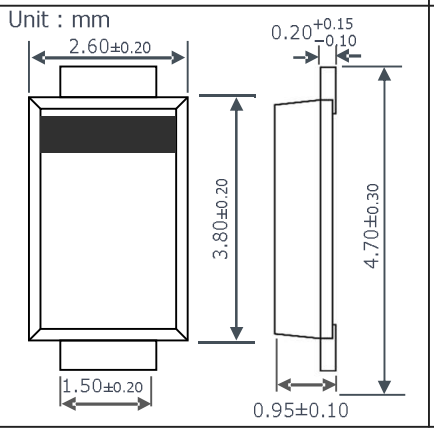	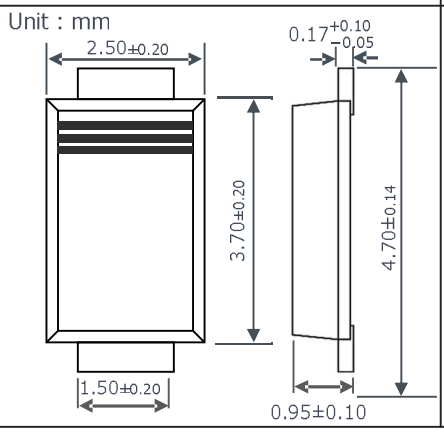	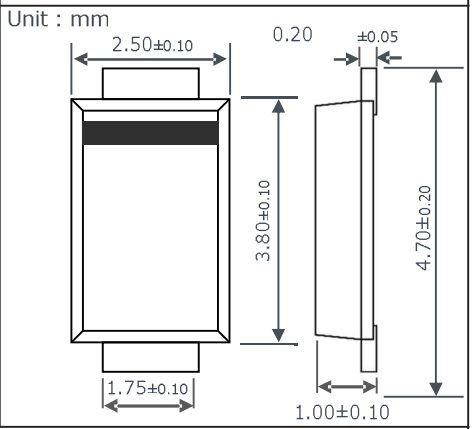
Recommended Foot Print	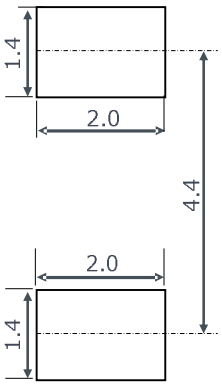		

© 2020 ROHM Co.,Ltd.

Marking Specification

Item	ROHM		OEM(PAN JIT)
	SOD-128 (PMDT/SMAF)	SOD-128 (PMDTM/SMAF)	SOD-128
Marking	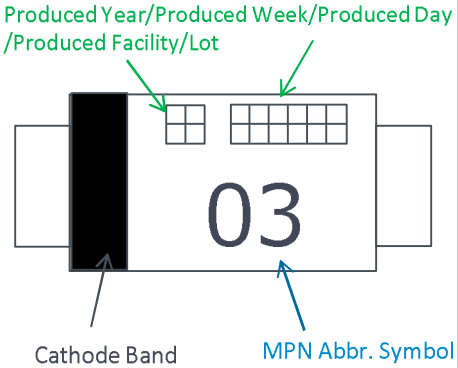	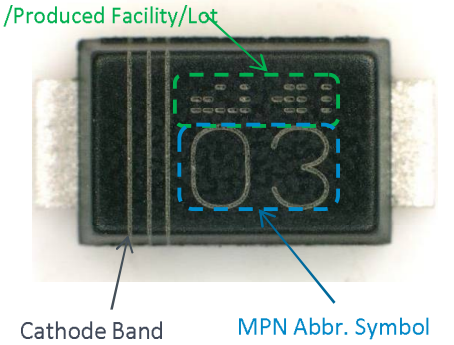	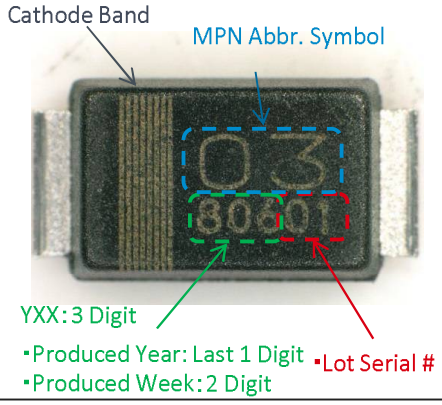
Inner structure	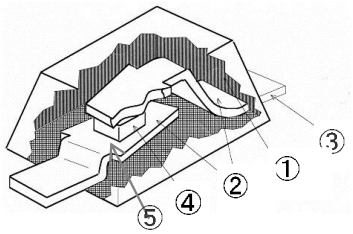	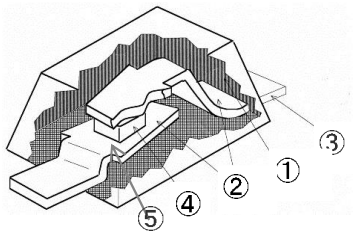	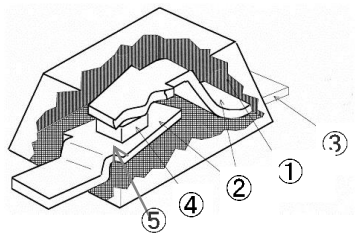

No.	Item	Material
①	Resin	Epoxy Resin(Harogen)
②	Leadframe	Copper/Nobase plating
③	Terminal Process	Solder Dip(Sn-3Ag-0.5Cu)
④	Chip	Silicon
⑤	Chip Junction	Die Bonding(Sn-Ag-Pb)

No.	Item	Material
①	Resin	Epoxy Resin(Harogen Free)
②	Leadframe	Copper/Nobase plating
③	Terminal Process	Electroplating(Sn)
④	Chip	Silicon
⑤	Chip Junction	Die Bonding(Sn-Ag-Pb)

No.	Item	Material
①	Resin	Epoxy Resin(Harogen Free)
②	Leadframe	Copper/Nobase plating
③	Terminal Process	Electroplating(Sn)
④	Chip	Silicon
⑤	Chip Junction	Die Bonding(Sn-Ag-Pb)

© 2020 ROHM Co.,Ltd.

Taping Specification

Item	ROHM Product	OEM(PAN JIT)
	SOD-128 (PMDT/PMDTM/SMAF)	SOD-128
Taping	■Taping Unit : mm 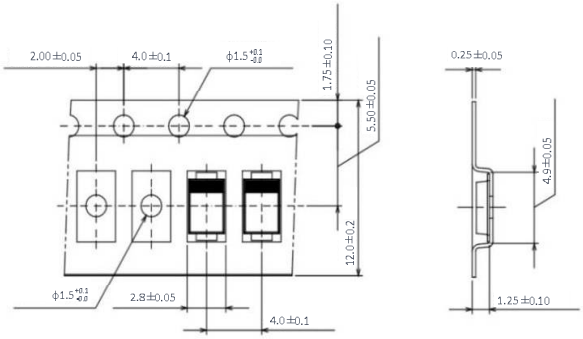	■Taping Unit : mm 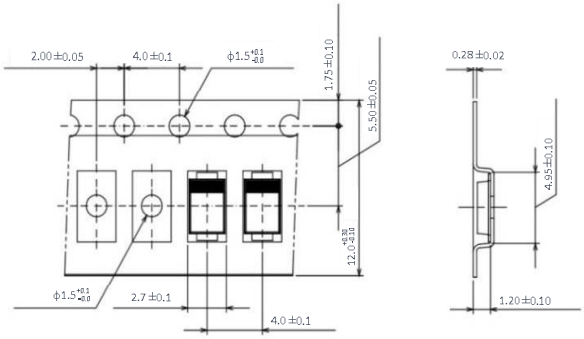

© 2020 ROHM Co.,Ltd.

Reel Specification

Item	ROHM Product	OEM(PAN JIT)
	SOD-128 (PMDT/PMDTM/SMAF)	SOD-128
Reel	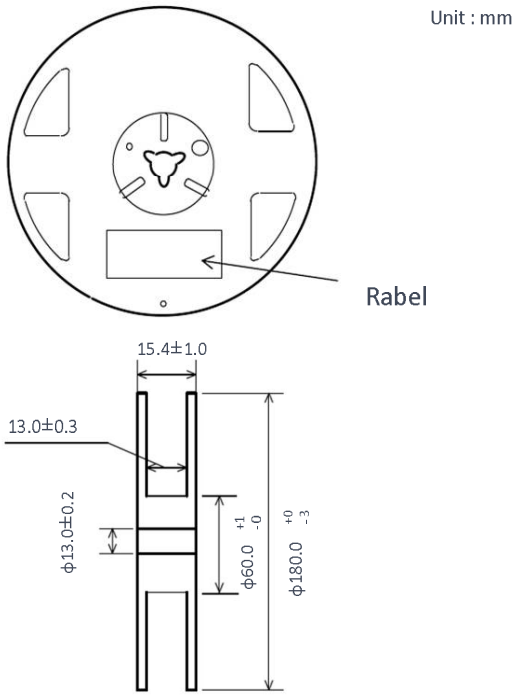 Qty：3,000pcs/Reel Color：White(Translucent)	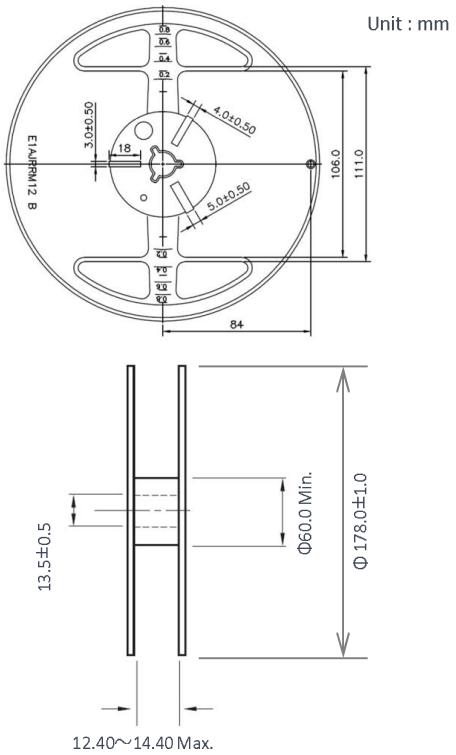 Qty：3,000pcs/Reel Color：Blue

© 2020 ROHM Co.,Ltd.

Packing Specification

Item	ROHM Product	OEM(PAN JIT)
	SOD-128 (PMDT/PMDTM/SMAF)	SOD-128
Packing	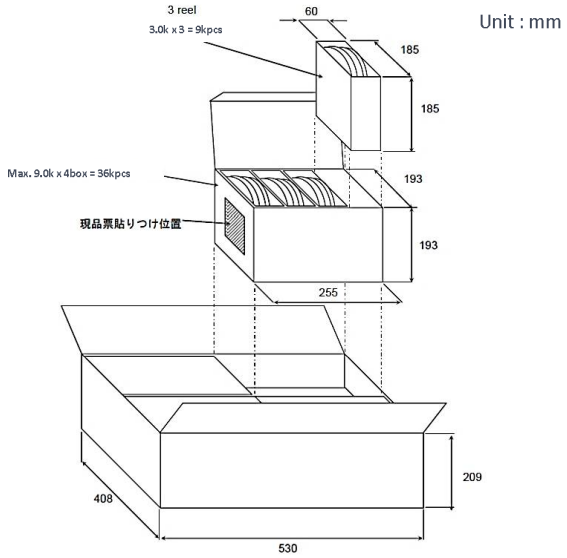 If lacking the standard qty, spacers are used to prevent the feels from moving in the cardboard box. <table><tr><th>Item</th><th>Content</th></tr><tr><td>Inside Box</td><td>L x W x H (mm)：193 x 255 x 193 ＜3kpcs/reel x 16reels : Max.48kpcs ＞</td></tr><tr><td>Outside Box</td><td>L x W x H (mm)：408 x 530 x 209 ＜ Inside Box x 4box : Max.192kpcs ＞</td></tr></table>	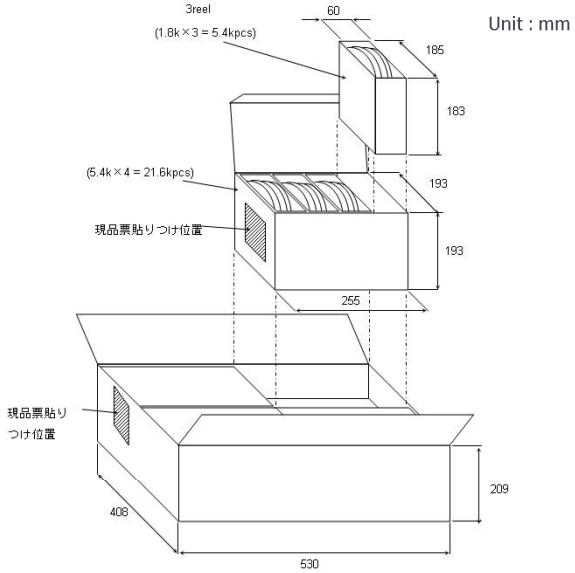 If lacking the standard qty, spacers are used to prevent the feels from moving in the cardboard box. <table><tr><th>Item</th><th>Contents</th></tr><tr><td>Inside Box</td><td>L x W x H (mm)：193 x 255 x 193 ＜3kpcs/reel x 12reels : Max.36kpcs ＞</td></tr><tr><td>Outside Box</td><td>L x W x H (mm)：408 x 530 x 209 ＜ Inside Box x 4box : Max.144kpcs ＞</td></tr></table>

© 2020 ROHM Co.,Ltd.

MPN List

Type	ROHM product MPN	OEM product MPN
SBD	RB050LA-30TR/RB050LAM-30TR	RB050LAP-30TR
	RB050LA-40TR/RB050LAM-40TR	RB050LAP-40TR
	RB050LAM-60TR	RB050LAP-60TR
	RB051LA-40TR/RB051LAM-40TR	RB051LAP-40TR
	RB055LAM-30TR	RB055LAP-30TR
	RB055LA-40TR/RB055LAM-40TR	RB055LAP-40TR
	RB055LAM-60TR	RB055LAP-60TR
	RB056LAM-40TR	RB056LAP-40TR
	RB058LAM100TR	RB058LAP100TR
	RB058LAM150TR	RB058LAP150TR
	RB058LAM-30TR	RB058LAP-30TR
	RB058LAM-40TR	RB058LAP-40TR
	RB058LAM-60TR	RB058LAP-60TR
	RB060LAM-40TR	RB060LAP-40TR
	RB068LAM100TR	RB068LAP100TR
	RB068LAM150TR	RB068LAP150TR
	RB068LAM-40TR	RB068LAP-40TR
	RB080LAM-30TR	RB080LAP-30TR
	RB081LAM-20TR	RB081LAP-20TR

© 2020 ROHM Co.,Ltd.

MPN List

Type	ROHM product MPN	OEM product MPN
SBD	RB088LAM100TR	RB088LAP100TR
	RB088LAM150TR	RB088LAP150TR
	RB160LAM-40TR	RB160LAP-40TR
	RB162LAM-40TR	RB162LAP-40TR
	RB162LAM-60TR	RB162LAP-40TR
	RB168LAM100TR	RB168LAP100TR
	RB168LAM150TR	RB168LAP150TR
	RB168LAM-40TR	RB168LAP-40TR
	RBR1LAM40ATR	RBR1LAP40ATR
	RBR1LAM60ATR	RBR1LAP60ATR
	RBR3LAM30ATR	RBR3LAP30ATR
	RBR3LAM40ATR	RBR3LAP40ATR
	RBR3LAM40BTR	RBR3LAP40BTR
	RBR3LAM40CTR	RBR3LAP40CTR
	RBR3LAM60ATR	RBR3LAP60A
	RBR3LAM60BTR	RBR3LAP60BTR
	RBR5LAM30ATR	RBR5LAP30ATR
	RBR5LAM30BTR	RBR5LAP30BTR
	RBR5LAM40ATR	RBR5LAP40ATR
	RBR5LAM60ATR	RBR5LAP60ATR
	RSX201LAM30TR	RSX201LAP30TR
	RSX301LA-30TR/RSX301LAM30TR	RSX301LAP30TR
	RSX501LA-20TR/RSX501LAM20TR	RSX501LAP20TR

© 2020 ROHM Co.,Ltd.

MPN List

Type	ROHM product MPN	OEM product MPN
ZD	PDZVTR10B	PDZPTR10B
FRD	RF071LAM4STR	RF071LAP4STR
	RF081LAM2STR	RF081LAP2STR
	RF101LAM2STR	RF101LAP2STR
	RF101LAM4STR	RF101LAP4S
	RF201LAM2STR	RF201LAP2S
	RF201LAM4STR	RF201LAP4STR
	RFN1LAM6STR	RFN1LAP6STR
	RFN1LAM7STR	RFN1LAP7STR
	RFN2LAM4STR	RFN2LAP4STR
	RFN2LAM6STR	RFN2LAP6STR
REC	RR1LAM4STR	RR1LAP4STR
	RR1LAM6STR	RR1LAP6STR
	RR2LAM4STR	RR2LAP4STR
	RR2LAM6STR	RR2LAP6STR

© 2020 ROHM Co.,Ltd.

ROHM SEMICONDUCTOR

ROHM Co.,Ltd.

© 2020 ROHM Co.,Ltd.

SOD-123FL PMDU Package
Comparison between Rohm - OEM (PANJIT)

9th April 2020
Power Device Business HQ
Middle Power Device Business Div.

Rev.1.3

© 2020 ROHM Co.,Ltd.

Outline

List of Differences

Item	ROHM Product		OEM(PAN JIT)
	SOD-123FL (PMDU) 【HOOP】	SOD-123FL (PMDU) 【WIDE】	SOD-123FL
Back End Facility	ROHM Semiconductor (China) Co.,Ltd. ROHM-Wako Electronics (Malaysia) Sdn. Bhd.	ROHM Wako(Japan) ROHM-Wako Electronics (Malaysia) Sdn. Bhd.	PAN JIT – Taiwan
Dimension	**Different *Please see detail in Page 2**		
Foot Print	No Differences		
Terminal Process	Dip Sn-3Ag-0.5Cu	Electroplating Sn 100%	Electroplating Sn 100%
Marking Process	Laser Marking – Mask Type	Laser Marking – Scan Type	Laser Marking – Mask Type
Marking Symbol	**Different *Please see detail in Page 3**		
Structure	No Changes ＜Solder Interlocking Type (Marking Side : Anode)＞		
Resin	Halogen Contained	Halogen Free	
Element (Wafer)	No Changes		
Reel	**Different *Please see detail in Page 4/5**		
Packing Material	No Changes		
Absolute Max	NO Changes		
Electric Characteristics	No Changes		

© 2020 ROHM Co.,Ltd.

Dimension Specification / Recommended Foot Print

[Unit:mm]

Item	ROHM Product		OEM(PAN JIT)
	SOD-123FL (PMDU) 【HOOP】	SOD-123FL (PMDU) 【WIDE】	SOD-123FL
Dimension	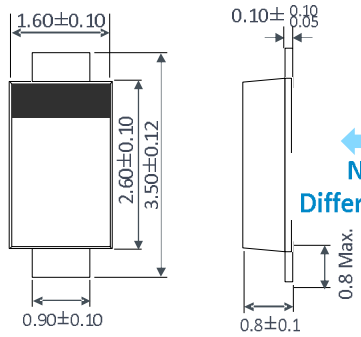	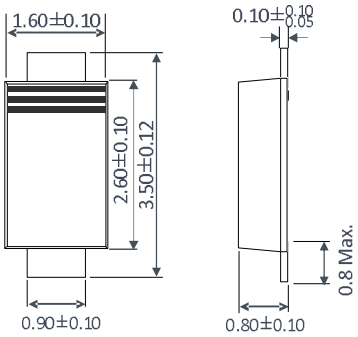	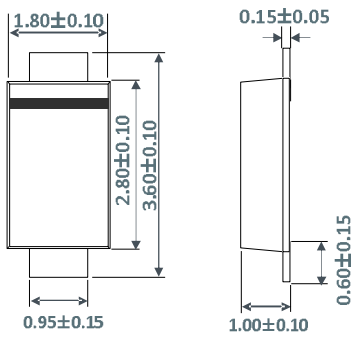
Recommended Foot Print	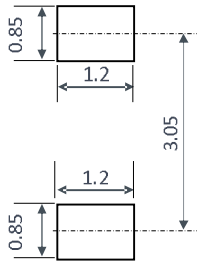 No Differences		

No Differences

© 2020 ROHM Co.,Ltd.

Marking Specification / Internal Construction

[Unit:mm]

Item	ROHM Product		OEM(PAN JIT)
	SOD-123FL (PMDU) 【HOOP】	SOD-123FL (PMDU) 【WIDE】	SOD-123FL
Marking			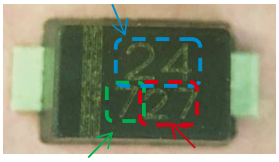
Structure	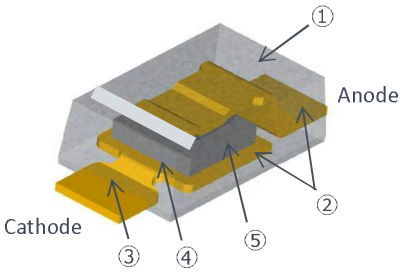	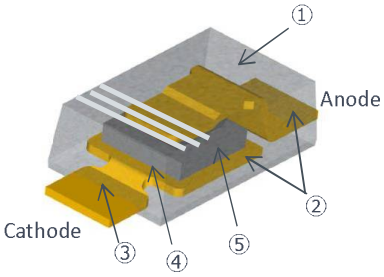	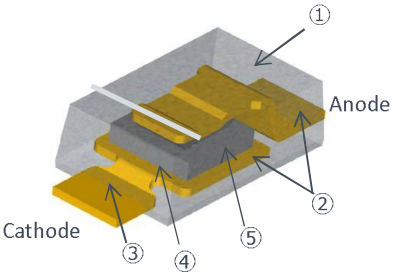

No.	Item	Material
①	Resin	Epoxy Resin(Halogen)
②	Lead Frame	Copper/ No base plating
③	Terminal Process	Solder Dip (Sn-3Ag-0.5Cu)
④	Chip Junction	Die Bonding (Sn-Ag-Pb)
⑤	Chip	Silicon

No.	Item	Material
①	Resin	Epoxy Resin(Halogen Free)
②	Lead Frame	Copper/ No base plating
③	Terminal Process	Electroplating(Sn)
④	Chip Junction	Die Bonding(Sn-Ag-Pb)
⑤	Chip	Silicon

No.	Item	Material
①	Resin	Epoxy Resin(Halogen Free)
②	Lead Frame	Copper / No base plating
③	Terminal Process	Electroplating(Sn)
④	Chip Junction	Die Bonding (Sn-Ag-Pb)
⑤	Chip	Silicon

© 2020 ROHM Co.,Ltd.

Taping Specification

[Unit:mm]

Item	ROHM Product		OEM(PAN JIT)
	SOD-123FL (PMDU) 【HOOP】	SOD-123FL (PMDU) 【WIDE】	SOD-123FL
Taping	■Taping 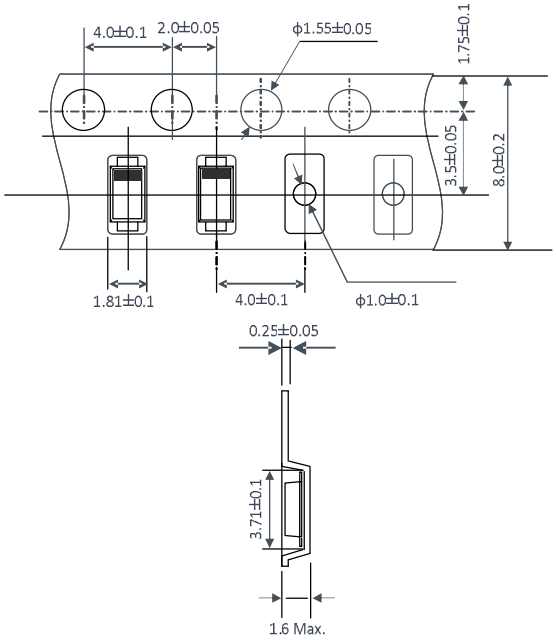 Note: 1. Adhesive tape only (Min. 600mm) and Carrier tape not containing products (Min. 110mm) area is in the beginning of the reel. 2.Product not contained carrier tape (min. 50mm) exists in the end of the reel.		■Taping 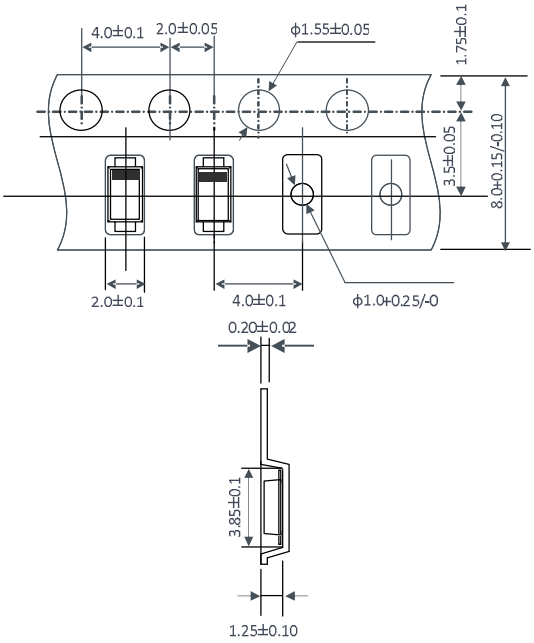 Note: 1. Adhesive tape only (Min. 230mm) and Carrier tape not containing products (Min. 160mm) area is in the beginning of the reel. 2.Product not contained carrier tape (min. 160mm) exists in the end of the reel.

© 2020 ROHM Co.,Ltd.

Reel Specification

[Unit:mm]

Item	ROHM Product		OEM(PAN JIT)
	SOD-123FL (PMDU) 【HOOP】	SOD-123FL (PMDU) 【WIDE】	SOD-123FL
Reel	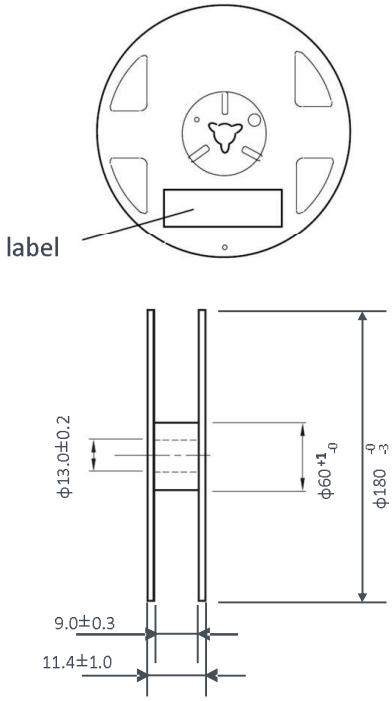 Qty：3,000pcs/Reel Color：White(Translucent)		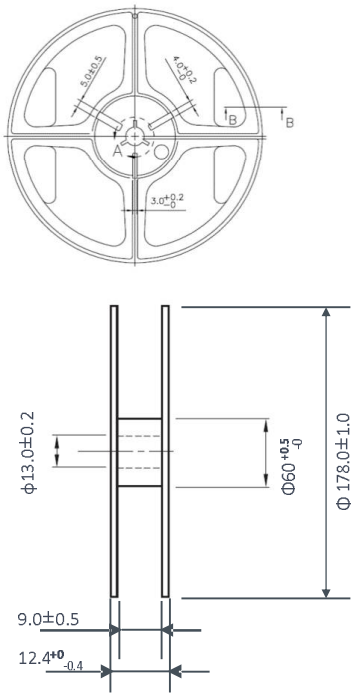 Qty：3,000pcs/Reel Color：Blue

© 2020 ROHM Co.,Ltd.

Packing Specification

[Unit:mm]

Item	ROHM Product		OEM(PAN JIT)
	SOD-123FL (PMDU) 【HOOP】	SOD-123FL (PMDU) 【WIDE】	SOD-123FL
Packing	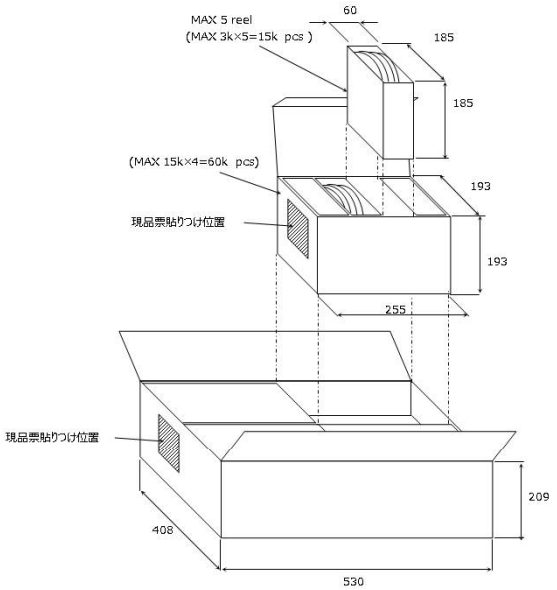 If lacking the standard qty, spacers are used to prevent the feels from moving in the cardboard box. Inside Box: L x W x H (mm) : 193 x 255 x 193 ＜3000pcs/reel x 20reels : Max.60kpcs ＞ Outside Box: L x W x H (mm) : 408 x 530 x 209 ＜ Inside Box x 4box : Max.240kpcs ＞ **No Differences**		

© 2020 ROHM Co.,Ltd.

MPN List

Type	ROHM product MPN	OEM product MPN
SBD	RB050M-30TR	RB050MP-30TR
	RB060M-30TR	RB060MP-30TR
	RB060M-40TR	RB060MP-40TR
	RB060M-60TR	RB060MP-60TR
	RB060MM-30TR	RB060MP-30TR
	RB060MM-40TR	RB060MP-40TR
	RB060MM-60TR	RB060MP-60TR
	RB068M-40TR	RB068MP-40TR
	RB068M-60TR	RB068MP-60TR
	RB068MM-30TR	RB068MP-30TR
	RB068MM-40TR	RB068MP-40TR
	RB068MM-60TR	RB068MP-60TR
	RB070M-30TR	RB070MP-30TR
	RB070MM-30TR	RB070MP-30TR
	RB160M-30TR	RB160MP-30TR
	RB160M-40TR	RB160MP-40TR
	RB160M-60TR	RB160MP-60TR
	RB160M-90TR	RB160MP-90TR
	RB160MM-30TR	RB160MP-30TR
	RB160MM-40TR	RB160MP-40TR
	RB160MM-60TR	RB160MP-60TR
	RB160MM-90TR	RB160MP-90TR
	RB161M-20TR	RB161MP-20TR
	RB161MM-20TR	RB161MP-20TR
	RB162M-30TR	RB162MP-30TR
	RB162M-40TR	RB162MP-40TR

© 2020 ROHM Co.,Ltd.

MPN List

Type	ROHM Product MPN	OEM product MPN
SBD	RB162M-60TR	RB162MP-60TR
	RB162MM-30TR	RB162MP-30TR
	RB162MM-40TR	RB162MP-40TR
	RB162MM-60TR	RB162MP-60TR
	RB168M150TR	RB168MP150TR
	RB168M-40TR	RB168MP-40TR
	RB168M-60TR	RB168MP-60TR
	RB168MM100TR	RB168MP100TR
	RB168MM150TR	RB168MP150TR
	RB168MM-40TR	RB168MP-40TR
	RB168MM-60TR	RB168MP-60TR
	RBR1MM30ATR	RBR1MP30ATR
	RBR1MM40ATR	RBR1MP40ATR
	RBR1MM60ATR	RBR1MP60ATR
	RBR2MM30ATR	RBR2MP30ATR
	RBR2MM30BTR	RBR2MP30BTR
	RBR2MM40ATR	RBR2MP40ATR
	RBR2MM40CTR	RBR2MP40CTR
	RBR2MM60ATR	RBR2MP60ATR
	RBR3MM30ATR	RBR3MP30ATR
	RBR3MM40ATR	RBR3MP40ATR
	RBR3MM40BTR	RBR3MP40BTR
	RBR3MM60ATR	RBR3MP60ATR
	RSX101M-30TR	RSX101MP-30TR
	RSX101MM-30TR	RSX101MP-30TR

© 2020 ROHM Co.,Ltd.

MPN List

Type	ROHM product MPN	OEM product MPN
ZD	KDZVTRxxB / KDZTRxxB	KDZPTRxxB
	KDZLVTRxxB	KDZLPTRxxB
FRD	RF071M2STR	RF071MP2STR
	RF071MM2STR	RF071MP2STR
	RF081M2SFJTR	RF081MP2STR
	RF081M2STR	RF081MP2STR
	RF081MM2STR	RF081MP2STR
	RR264M-400FJTR	RR264MP-400TR
REC	RR264M-400TR	RR264MP-400TR
	RR264MM-400TR	RR264MP-400TR
TVS	RSA12MMTR	RSA12MPTR
	RSA5MMTR	RSA5MPTR

© 2020 ROHM Co.,Ltd.

ROHM SEMICONDUCTOR

ROHM Co.,Ltd.

© 2020 ROHM Co.,Ltd.