Cypress Semiconductor Corporation, 198 Champion Court, San Jose, CA 95134. Tel: (408) 943-2600

PRODUCT CHANGE NOTIFICATION

PCN: PCN192501B **Date:** February 04, 2020

Subject: Addendum to PCN192501A - Qualification of Fab 25 with the Copper (Cu) BEOL Process for the USB-Serial Bridge Controller Products

To: PCN Coordinator PCN Coordinator
FUTURE
PCN.System@Future.ca

Change Type: Major

Description of Change:
The purpose of this addendum is to add some missed part numbers in the affected parts list communicated in PCN 192501A.

Cypress announced the qualification of Fab 25 (5204 East Ben White Boulevard, Austin, TX 78741, USA) as an additional wafer fab site with the Copper (Cu) Backend of Line (BEOL) process for the USB-SERIAL Bridge Controller products.

This qualification is part of the flexible manufacturing initiative which allows Cypress to meet its delivery commitments in dynamic and changing market conditions.

Benefit of Change:
Qualification of alternate manufacturing sites is part of the ongoing flexible manufacturing initiative announced by Cypress. The goal of the flexible manufacturing initiative is to provide the means for Cypress to continue to meet delivery commitments through dynamic, changing market conditions.

Part Numbers Affected: 46
See the attached 'Affected Parts List' file for a list of all part numbers affected by this change. Note that any new parts that are introduced after the publication of this PCN will include all changes outlined in this PCN.

Qualification Status:
This wafer fab site has been qualified through a series of tests documented in the Qualification Test Plan QTP#190604. This qualification report can be found as an attachment to this PCN or by visiting www.cypress.com and typing the QTP number in the keyword search window.

Sample Status:
Qualification samples may not be built ahead of time for all part numbers affected by this change. Please review the attached 'Affected Parts List' file for a list of affected part numbers with their associated Fab 25 sample ordering part numbers. Samples are available now unless there is an indication that the sample ordering part numbers are subject to lead times. If you require qualification samples, please contact your local Cypress sales representative as soon as possible, preferably within 30 days of the date of this PCN, to place any sample orders.

Approximate Implementation Date:
Effective 90 days from the date of this notification or upon customer approval, whichever comes first, all shipments of Commercial, Industrial and Automotive non-PPAP part numbers in the attached file will be supplied from Fab 25 or other approved wafer fabrication sites.

Anticipated Impact:
Products fabricated at the new site are completely compatible with existing products from form, fit, functional, parametric and quality performance perspectives.

Cypress also recommends that customers take this opportunity to review these changes against current application notes, system design considerations and customer environment conditions to assess impact (if any) to their application.

Method of Identification:
Cypress maintains traceability of product to wafer level, including wafer fabrication location, through the lot number marked on the package.

Response Required:
No response is required.

For additional information regarding this change, contact your local sales representative or contact the PCN Administrator at pcn_adm@cypress.com.

Sincerely,

Cypress PCN Administration

Cypress Semiconductor Corporation

CY7C65215 Characterization Report

USB-Serial Dual Channel (UART/I2C/SPI)
Bridge with Cap Sense® and BCD

Design Engineering Director
Hariom Rai
hxr@cypress.com

Product Engineering Manager
Rochelle Arreola
irb@cypress.com

Product Engineer
Syed Irfan
syir@cypress.com

Applications Engineer
Veerappan Rajaram
rajv@cypress.com

Marketing Engineer
Subramanyam Sankaran
smsn@cypress.com

www.cypress.com

198 Champion Ct.
San Jose, CA 95134 USA

Tel: (408) 943 2600
Fax: (408) 943 4730

Company Confidential
A printed copy of this document is considered uncontrolled. Refer to online copy for latest revision.

1.0 Table of Contents

1.0 Table of Contents 2

2.0 Introduction 3

2.1 General Description 3
2.2 Datasheet 7
2.3 Application Notes 7
2.4 White Papers 7
2.5 Qualification Report 7

3.0 Characterization Hardware and Setup. 8

3.1 Measurement System and Hardware 8
3.2 AC/DC Characterization Board 9
3.3 Characterization Conditions and Parameters 11

4.0 DC Characterization 12

4.1 DC Characterization Summary over V_{DD} and Temperature 12

5.0 AC Characterization 13

5.1 AC Characterization Summary over V_{DD} and Temperature 13
5.2 GPIO Characterization Summary 14
5.3 nXRES Characterization Summary 15
5.4 UART Characterization Summary 16
5.5 SPI Characterization Summary 17
5.6 I2C Characterization Summary 18
5.7 JTAG 19
5.8 Flash Memory Specifications 19
5.9 CapSense Specifications 20

Document History Page 21

2.0 Introduction

2.1 General Description

The CY7C65215 is a full-speed USB controller that connects USB and dual-channel serial interfaces such as UART, SPI, and I2C. CY7C65215 also integrates CapSense and BCD compliant with the USB Battery Charging Specification Rev. 1.2.

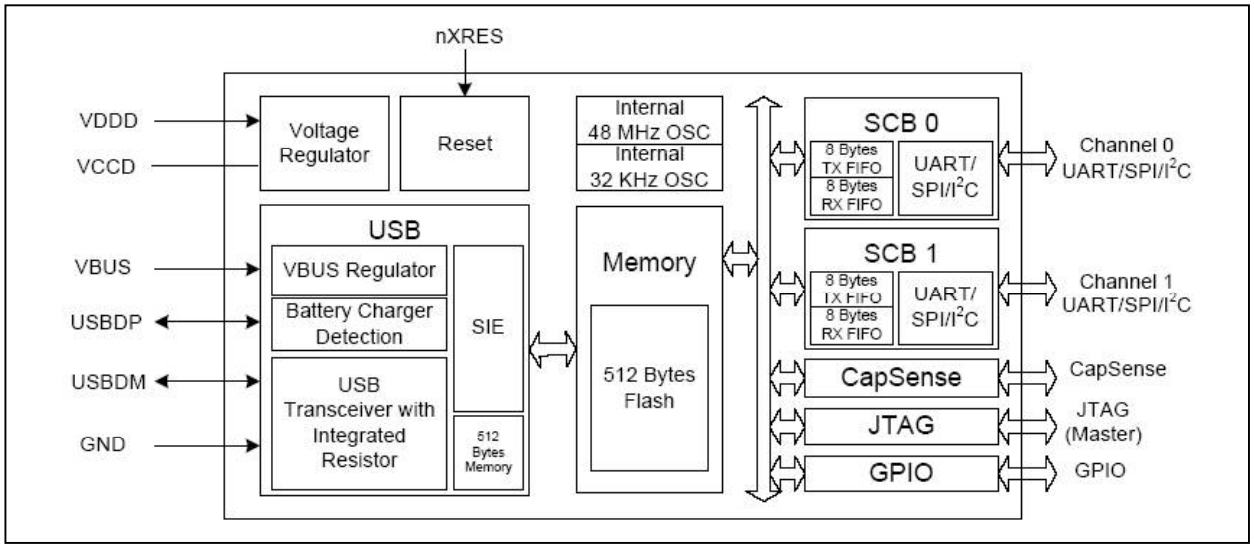

Figure1: USB-Serial Block Diagram

Table1: Pin Description:

Pin	Internal Name	Type	Name		Default	Description
1	VDDD	Power	VDDD		-	Supply to the device core and Interface, 1.71 to 5.5V
2	P1.0	SCB/GPIO	SCB0_0	GPIO_8	RxD_0	GPIO/SCB0. See Table 2 and Table 4
3	P1.1	SCB/GPIO	SCB0_5	GPIO_9	DTR#_0	GPIO/SCB0. See Table 2 and Table 4
4	VSSD	Power	VSSD		-	Digital Ground
5	P1.2	SCB/GPIO	SCB1_0	GPIO_10	RxD_1	GPIO/SCB1. See Table 3 and Table 4
6	P1.3	SCB/GPIO	SCB1_1	GPIO_11	TxD_1	GPIO/SCB1. See Table 3 and Table 4
7	P1.4	SCB/GPIO	SCB1_2	GPIO_12	RTS#_1	GPIO/SCB1. See Table 3 and Table 4
8	P1.5	SCB/GPIO	SCB1_3	GPIO_13	CTS#_1	GPIO/SCB1. See Table 3 and Table 4
9	P1.6	SCB/GPIO	SCB1_4	GPIO_14	DSR#_1	GPIO/SCB1. See Table 3 and Table 4
10	P1.7	SCB/GPIO	SCB1_5	GPIO_15	DTR#_1	GPIO/SCB1. See Table 3 and Table 4
11	P2.0	GPIO	SUSPEND		-	Indicates device in suspend mode. Can be configured as active low/high using software utility.
12	P2.1	GPIO	WAKEUP		-	Wakeup device from suspend mode. Can be configured as active low/high using software utility.
13	P2.2	GPIO	GPIO_16		TRISTATE	GPIO. See Table 4
14	USBDP	USBIO	USBDP		-	USB DP
15	USBDM	USBIO	USBDM		-	USB DM
16	VCCD	Power	VCCD		-	Regulated supply, connect to 1-uF cap or 1.8 V
17	VSSD	Power	VSSD		-	Digital Ground
18	XRES	XRES	XRES		-	Chip reset, active low.
19	VBUS	Power	VBUS		-	VBUS Supply, 3.15 V to 5.25 V
20	VSSD	Power	VSSD		-	Digital Ground
21	P2.3	Outout	GPIO_17		TRISTATE	GPIO. See Table 4
22	P2.4	Input	GPIO_18		TRISTATE	GPIO. See Table 4
23	VDDD	Power	VDDD		-	Supply to the device core and Interface, 1.71 to 5.5V
24	VSSA	Power	VSSA		-	Analog Ground
25	P0.0	GPIO	GPIO_0		TXLED#	GPIO. See Table 4
26	P0.1	GPIO	GPIO_1		RXLED#	GPIO. See Table 4
27	P0.2	SCB/GPIO	SCB0_1	GPIO_2	DSR#_0	GPIO/SCB0. See Table 2 and Table 4
28	P0.3	SCB/GPIO	SCB0_2	GPIO_3	RTS#_0	GPIO/SCB0. See Table 2 and Table 4
29	P0.4	SCB/GPIO	SCB0_3	GPIO_4	CTS#_0	GPIO/SCB0. See Table 2 and Table 4
30	P0.5	SCB/GPIO	SCB0_4	GPIO_5	TxD_0	GPIO/SCB0. See Table 2 and Table 4
31	P0.6	GPIO	GPIO_6		POWER#	GPIO. See Table 4
32	P0.7	GPIO	GPIO_7		TRISTATE	GPIO. See Table 4

Figure 2: 32-Pin QFN Pinout

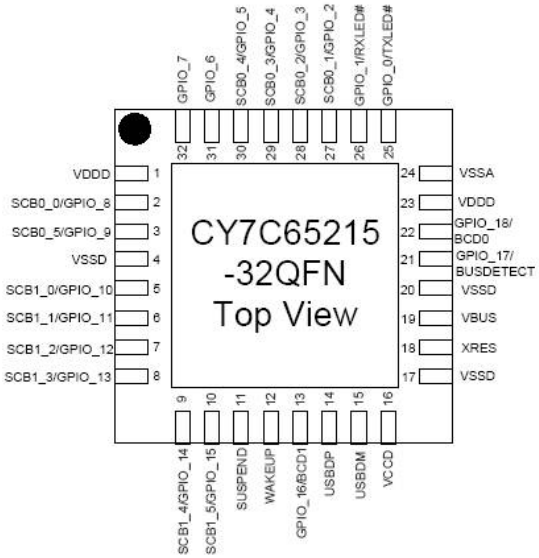

Table 2: Serial Communication Block (SCB0) Configuration

Pin	Serial Port 0	Mode 0*	Mode 1	Mode 2	Mode 3	Mode 4	Mode 5	Mode 6
		6-pin UART	4-pin UART	2-pin UART	SPI Master	SPI Slave	I^2C Master	I^2C Slave
2	SCB0_0	RxD_0	RxD_0	RxD_0	GPIO_8	GPIO_8	GPIO_8	GPIO_8
27	SCB0_1	DSR#_0	GPIO_2	GPIO_2	SSEL_OUT_0	SSEL_IN_0	GPIO_2	GPIO_2
28	SCB0_2	RTS#_0	RTS#_0	GPIO_3	MISO_IN_0	MISO_OUT_0	SCL_OUT_0	SCL_IN_0
29	SCB0_3	CTS#_0	CTS#_0	GPIO_4	MOSI_OUT_0	MOSI_IN_0	SDA_0	SDA_0
30	SCB0_4	TxD_0	TxD_0	TxD_0	SCLK_OUT_0	SCLK_IN_0	GPIO_5	GPIO_5
3	SCB0_5	DTR#_0	GPIO_9	GPIO_9	GPIO_9	GPIO_9	GPIO_9	GPIO_9

*Note: Device configured in Mode 0 as default. Other modes can be configured through Cypress-provided software.

Table 3: Serial Communication Block (SCB1) Configuration

Pin	Serial Port 1	Mode 0*	Mode 1	Mode 2	Mode 3	Mode 4	Mode 5	Mode 6	Mode 7
		6-pin UART	4-pin UART	2-pin UART	SPI Master	SPI Slave	I^2C Master	I^2C Slave	JTAG Master
5	SCB1_0	RxD_1	RxD_1	RxD_1	MISO_IN_1	MISO_OUT_1	SCL_OUT_1	SCL_IN_1	TDI
6	SCB1_1	TxD_1	TxD_1	TxD_1	MOSI_OUT_1	MOSI_IN_1	SDA_1	SDA_1	TDO
7	SCB1_2	RTS#_1	RTS#_1	GPIO_12	SSEL_OUT_1	SSEL_IN_1	GPIO_12	GPIO_12	TMS
8	SCB1_3	CTS#_1	CTS#_1	GPIO_13	SCLK_OUT_1	SCLK_IN_1	GPIO_13	GPIO_13	TCK
9	SCB1_4	DSR#_1	GPIO_14	GPIO_14	GPIO_14	GPIO_14	GPIO_14	GPIO_14	TRST#
10	SCB1_5	DTR#_1	GPIO_15	GPIO_15	GPIO_15	GPIO_15	GPIO_15	GPIO_15	GPIO_15

*Note: Device configured in Mode 0 as default. Other modes can be configured via Cypress-provided software.

GPIO
SCB0
SCB1

Table 4: GPIO Configuration

GPIO Configuration Option	Description
TRISTATE	IO tristated
DRIVE 1	Output static 1
DRIVE 0	Output static 0
POWER#	This output is used to control power to an external logic via switch to cut power off during unconfigured USB device and USB suspend. Enable the interface pull-down option when using the POWER# in this way. 0 - Device configured by USB 1 - Device unconfigured by USB or during USB suspend mode
TXLED#	Drives LED during USB transmit
RXLED#	Drives LED during USB receive
TX and RX LED#	Drives LED during USB transmit and receive
BCD0 BCD1	Configurable battery charge detect pins to indicate battery charger, type of USB charger (SDP, CDP or DCP) Configuration example: 00 - Draw upto 100 mA (prior to USB configuration) 01 - SDP (up to 500 mA) 10 - CDP/DCP (up to 1.5 A) 11 - Suspend (up to 2.5 mA) This truth table can be configured via software utility based on battery charger requirement
BUSDETECT	VBUS detection. Connect VBUS to this pin via resister divider network for vbus detection when using BCD feature. VBUS from connector can be connected to VBUS pin, if VBUS does not spike to 9 volts. VBUS pin is intolerant to 9 volts
CapSense over GPIO	
CS0, CS1, CS2, CS3, CS4, CS5, CS6, CS7	CapSense button input (Max upto 8)
CSout0, CSout1, CSout2, CSout3, Csout_int	Indicates which CapSense button is pressed
Cmod (Available on GPIO_0 only)	External modulator capacitor, connect a 2.2 nF (±10%) to ground
Cshield (optional)	Shield for waterproofing
Note: These signal options can be configured on any of the available GPIO pins via Cypress provided software.	

2.2 Datasheet

The USB-Serial Marketing part# CY7C65215 meets all datasheet specifications. The datasheet is available from the Cypress Website at:

http://www.cypress.com (the specific webpage URL is TBD).

2.3 Application Notes and Reference Documents

USB-Serial Dual Channel (UART/I2C/SPI) Bridge with Cap Sense® and BCD has no associated Application Notes at this time..

2.4 White Papers

USB-Serial Dual Channel (UART/I2C/SPI) Bridge with Cap Sense® and BCD has no associated White Papers at this time.

2.5 Qualification Report

The CY7C65211 part is qualified under QTP 124105. The qualification report is available from the Cypress Website at:

http://www.cypress.com (the specific webpage URL is TBD).

3.0 Characterization Hardware and Setup

3.1 Measurement System and Hardware

Temperature Forcing System
Temptronics TPO4310A Precision Temperature Forcing System is used to force ambient/industrial operating temperatures of -45C, 25C and 105C.

Power Supply
Agilent E3631A was used as DC Power supply
Keithley-2400 or NI-PXI-4132 SMU was used to source the operating device power supply voltages as well as to measure currents

Digital Multimeter
Agilent 34401A was used to measure voltages at 6.5 digit resolution

Clock Input
Tektronix AFG3102 Arbitrary Function Generator or Stanford Research Systems DS360 was used to provide clock signal

Oscilloscope
The Tektronix DPO7254 Digital Phosphorus Oscilloscope is used to measure all AC parameters on the device including frequency, rise/fall time and duty cycle.

Probes
All AC signals were measured using Tektronix TAP-1500 FET Probe

ATE Tester
Advantest 93000

3.2 AC/DC Characterization Board

Two different boards were used for characterization.
Bench characterization board (spec 001-13248) and ATE Load board (001-83406)
Both of them use Altanova 32-pin QFN socket to clamp down the device and interface with the board pads.
Figures below show the top view and bottom view of the CY7C65215 Bench characterization board.

Figure 3: USB-Serial Bench Characterization Board-32QFN Top View

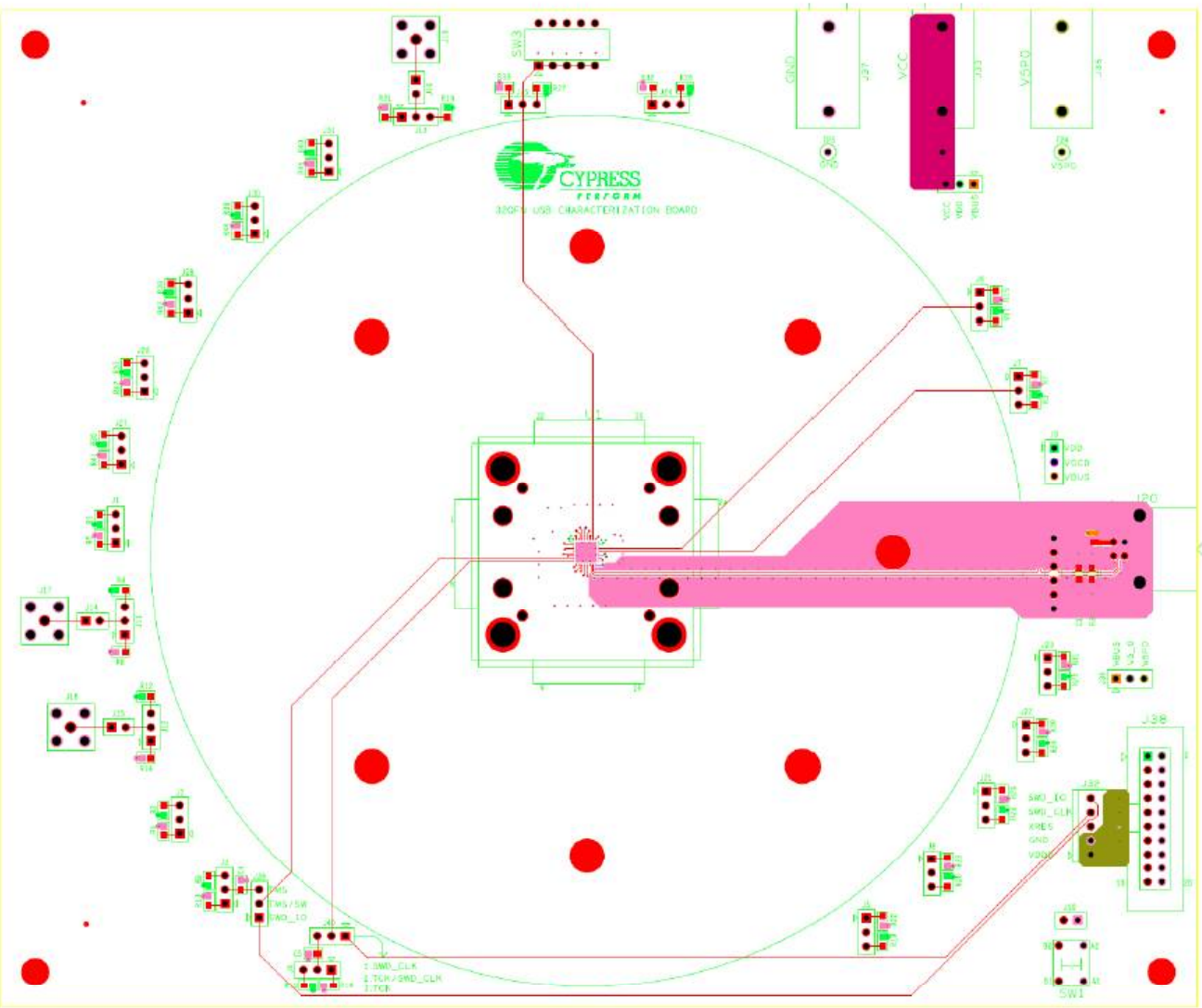

Figure 4: USB-Serial Bench Characterization Board-32QFN Bottom View

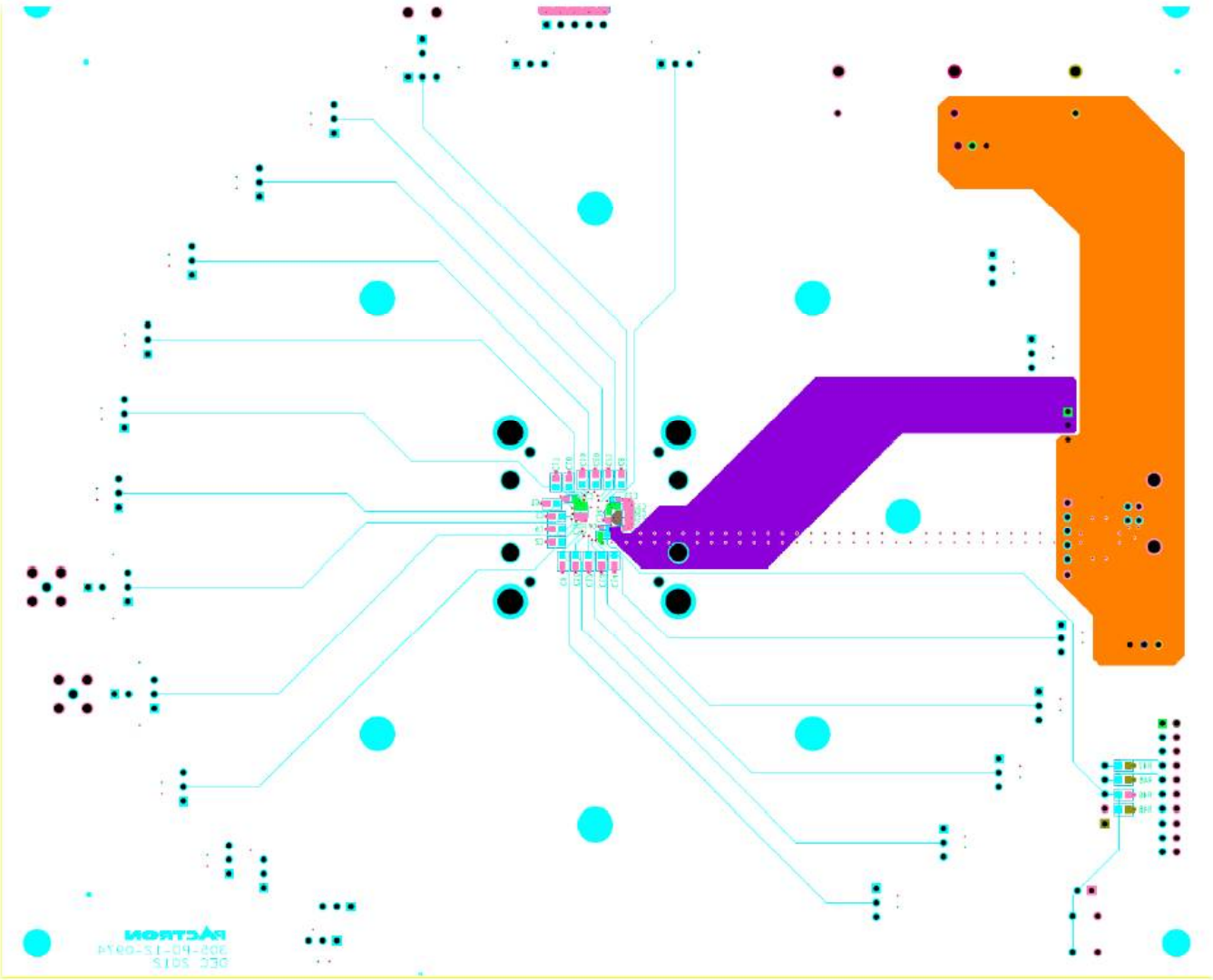

Characterization Conditions and Parameters

Characterization was done on the following parts and conditions as listed in Table 5. Units were built using standard production manufacturing and chosen randomly unless specified.

Table 5. Characterization Conditions and Parameters

Parameter	Device	Fab Lot	Assy Lot	# of Devices	Voltage Variation (V)	Temperature Variation (°C)
DC	CY7C65215-32LTXI	4232341 4307374	611302953 611310391 Engineering builds[1]	20	Vddd1 (V)/ Vddd2 (V) = 1.7 -5.5V VBUS1(V)/ VBUS2(V) = 3.05 -5.35V	-45, 25,105
AC	CY7C65215-32LTXI	4232341 4307374	611302953 Engineering builds[1]	20	Vddd1 (V)/ Vddd2 (V) = 1.7 -5.5V VBUS1(V)/ VBUS2(V) = 3.05 -5.35V	-45, 25,105

1 Units were assembled off the system at Cypress San Jose in the USA.

4.0 DC Characterization

4.1 DC Characterization Summary over V_{DD} and Temperature

Table 6. DC Characterization Results across V_{DD} and Temperature

PARAMETER	DESCRIPTION	Datasheet			Measured (CMI)			Measured (FAB25)			UNITS
		MIN	TYP	MAX	MIN	TYP	MAX	MIN	TYP	MAX	
DC Specifications											
VBUS1	USB Transceiver supply voltage	3.15	3.3	3.45	3.05	3.3	3.55	3.05	3.3	3.55	V
VBUS2	USB Transceiver supply voltage	4.35	5.00	5.25	4.25	5	5.35	4.25	5	5.35	V
Vddd1	Power Supply Input Voltage	1.71	1.8	1.89	1.71	1.8	1.89	1.71	1.8	1.89	V
Vddd2	Power Supply Input Voltage	2	3.3	5.5	2	3.3	5.5	2	3.3	5.5	V
Vccd	Output voltage (for core logic)		1.8		1.79	1.82	1.84	1.79	1.82	1.84	V
Cefc	External Regulator voltage bypass	1	1.3	1.6	1			1			µF
Idd1	Operating Supply Current	-	20		13.99	15.56	20.35	10.49	14.23	18.94	mA
Idd2	USB Suspend Supply Current	-	5	-	1.84	3.62	4.88	1.93	3.81	4.91	µA

5.0 AC Characterization

Table 7. AC Characterization Results across V_{DD} and Temperature

PARAMETER	DESCRIPTION	Datasheet			Measured (CMI)			Measured (FAB25)			UNITS
		MIN	TYP	MAX	MIN	TYP	MAX	MIN	TYP	MAX	
AC Specifications											
F1	frequency	47.04	48	48.96	47.51	47.86	48.16	47.38	48.23	48.72	Mhz
F2		47.88	48	48.12	47.96	47.98	48.04	47.96	48.00	48.04	Mhz
Twakeup	Wakeup from USB Suspend (Deep Sleep Mode)	-	25	-	17.20	20.41	20.72	17.60	19.24	21.81	µs

5.1 GPIO

Table 8. GPIO AC Specifications

PARAMETER	DESCRIPTION	Datasheet			Measured (CMI)			Measured (FAB25)			UNITS
		MIN	TYP	MAX	MIN	TYP	MAX	MIN	TYP	MAX	
GPIO AC Specifications											
TriseF	Rise time in Fast Strong Mode	2	-	12	3.40	-	7.62	3.729	-	5.516	ns
TfallF	Fall time in Fast Strong Mode	2	-	12	3.34	-	7.85	3.437	-	5.679	ns
TriseS	Rise time in Slow Strong Mode	10	-	60	12.95	-	39.60	14.28	-	25.027	ns
TfallS	Fall time in Slow Strong Mode	10	-	60	13.11	-	39.29	13.509	-	22.923	ns
Trise_2V_1_i	Output Rise Time for std slew control (slow = 0)	2	-	20	8.1	-	13.3	10.55	-	12.60	ns
Trise_2V_2_i	Output Rise Time for slow slew control (slow = 1)	20	-	100	43	-	78.7	48.43	-	57.05	ns
Tfall_2V_1_i	Output Fall Time for std slew control (slow = 0)	2	-	20	8.63	-	13.5	10.82	-	12.89	ns
Tfall_2V_2_i	Output Fall Time for slow slew control (slow = 1)	20	-	100	50.60	-	81.6	51.9	-	63.96	ns

Table 9. GPIO DC Specifications

PARAMETER	DESCRIPTION	Datasheet			Measured (CMI)			Measured (FAB25)			UNITS	Condition
		MIN	TYP	MAX	MIN	TYP	MAX	MIN	TYP	MAX		
GPIO DC Specifications												
Vih	Input Voltage high threshold	0.7	-	-	0.53	-	-	0.53	-	-	*Vddd	CMOS Input;
Vil	Input Voltage low threshold	-	-	0.3		-	0.50	-	-	0.482	* Vddd	CMOS Input;
Vih	LVTTL input, Vddd< 2.7V	0.7	-	-	0.44	-		0.48	-	-	* Vddd	
Vil	LVTTL input, Vddd < 2.7V	-	-	0.3		-	0.48	-	-	0.44	*Vddd	
Vih	LVTTL input, Vddd >= 2.7V	2.0	-	-	1.10	-	-	1.14	-	-	V	Vddd=2.97V
Vil	LVTTL input, Vddd >= 2.7V	-	-	0.8		-	1.76	-	-	1.68	V	Vddd=5.5V
Voh	Output Voltage high level	Vddd-0.4	-	-	Vddd-0.15	-	-	Vddd-0.15	-	-	V	Ioh = 4mA at Vddd =5V+/-10%
Voh	Output Voltage high level	Vddd-0.6	-	-	Vddd -0.22	-	-	Vddd-0.22	-	-	V	Ioh = 4mA at Vddd = 3.3V +/-10%
Voh	Output Voltage high level	Vddd-0.5	-	-	Vddd-0.11	-	-	Vddd-0.10	-	-	V	Ioh = 1mA at Vddd =1.8V +/-10%
Vol	Output Voltage low level	-	-	0.4	-	-	0.14	0.11	-	0.16	V	Iol = 8mA at Vddd =5V+/-10%
Vol	Output Voltage low level	-	-	0.6	-	-	0.19	0.13	-	0.18	V	Iol = 8mA at Vddd = 3.3V +/-10%
Vol	Output Voltage low level	-	-	0.6	-	-	0.16	0.13	-	0.16	V	Iol = 4mA at Vddd =1.8V +/-10%
Rpullup	Pull-up resistor	3.5	5.6	8.5	4.39	4.73	5.94	4.71	4.94	5.33	kΩ	
Rpulldown	Pull-down resistor	3.5	5.6	8.5	4.27	4.71	6.05	4.58	4.82	5.04	kΩ	
Iil	Input leakage current(absolute value)	-	-	2	*GBD	-	*GBD	*GBD	-	*GBD	nA	25° C, Vdd = 3.0V
Cin	Input Capacitance	-	5	7		2.23	3.90	-	2.16	3.58	pF	
Vhysttl	Input hysteresis LVTTL Vddd > 2.7V	25	40	-	30.99	47.35	-	27.82	-	49.23	mV	
Vhyscmos	Input hysteresis CMOS	0.05*Vddd	-	-	0.065*Vddd	-	-	0.063*vddd	-	-	mV	

*GBD= Guaranteed by design

5.2 nXRES

Table 10. nXRES DC Specifications

PARAMETER	DESCRIPTION	Datasheet			Measured (CMI)			Measured (FAB25)			UNITS
		MIN	TYP	MAX	MIN	TYP	MAX	MIN	TYP	MAX	
nXRES DC Specifications											
Vih	Input Voltage high threshold	0.7	-	-	0.53	-	-	0.53	-	-	*Vddd
Vil	Input Voltage low threshold	-	-	0.3		-	0.49	-	-	0.482	*Vddd
Rpullup	Pull-up resistor	3.5	5.6	8.5	4.27	-	5.40	4.39	4.58	4.77	kΩ
Cin	Input Capacitance	-	5	-	2.27	2.45	2.62	2.2	2.33	2.42	pF
Vhysxres	Input voltage hysteresis	-	100	-	241.00	314.8	347.00	261.36	283.38	319.00	mV

Table 11. nXRES AC Specifications

PARAMETER	DESCRIPTION	Datasheet			Measured (CMI)			Measured (FAB25)			UNITS
		MIN	TYP	MAX	MIN	TYP	MAX	MIN	TYP	MAX	
nXRES AC Specifications											
Tresetwidth	Reset pulse width	1	-	-	0.14	-	-	0.150	0.160	0.175	µs

5.3 UART

Table 12. UART AC Specifications

PARAMETER	DESCRIPTION	Datasheet			Measured (CMI)			Measured (FAB25)			UNITS
		MIN	TYP	MAX	MIN	TYP	MAX	MIN	TYP	MAX	
UART AC Specifications											
Fuart	UART Bit Rate	-	-	3	-	-	3	-	-	3	Mbps

5.4 SPI

Table 13. SPI AC Specifications

PARAMETER	DESCRIPTION	Datasheet			Measured (CMI)			Measured (FAB25)			UNITS
		MIN	TYP	MAX	MIN	TYP	MAX	MIN	TYP	MAX	
SPI AC Specifications											
Fspi1	SPI Operating frequency (Master/Slave)	-	-	3	-	-	4	-	-	4	MHz
Wlspi	SPI Word length	4	-	16	4	-	16	4	-	16	bits
Fixed SPI Master mode AC Specifications											
Tdmo	MOSI Valid after SClock driving edge	-	-	15	-	-	3.81	-		3.93	ns
Tdsi	MISO Valid before SClock capturing edge	20	-	-	-152.01	-	-	-146.32	-	-	ns
Thmo	Previous MOSI data hold time with respect to capturing edge at slave	0	-	-	1.94	-	-	1.87	-	-	ns
Fixed SPI Slave mode AC Specifications											
Tdmi	MOSI Valid before Sclock Capturing edge	40	-	-	-10.26			-12.31	-	-	ns
Tdso	MISO Valid after Sclock driving edge	-	-	104.4			94.00		-	97.23	ns
Thso	Previous MISO data hold time	0	-	-	74.05	-	-	76.15	-	-	ns
Tsselsck	SSEL Valid to first SCK Valid edge	100	-	-	26.17	-	-	27.23	-	-	ns

5.5 I2C Specifications

Table 14. I2C AC Specifications

PARAMETER	DESCRIPTION	Datasheet (Slow Mode)			Datasheet (Fast Mode)			Measured – CMI Slow Mode			Measured – CMI Fast Mode			Measured – FAB25 Slow Mode			Measured – FAB25 Fast Mode			UNITS
		MIN	TYP	MAX	MIN	TYP	MAX	MIN	TYP	MAX	MIN	TYP	MAX	MIN	TYP	MAX	MIN	TYP	MAX	
tHD:STA	hold time START condition	4	-	.	0.6	-	-	5.8	-	-	1.24	-	-	5.82	-	-	1.24	-	-	us
tLOW	LOW period of the SCL	4.7	-	.	1.3	-	-	5.01	-	-	1.46	-	-	4.99	-	-	1.43	-	-	MHz
tHIGH	HIGH period of the SCL	4	-	.	0.6	-	-	4.94	-	-	1.02	-	-	4.94	-	-	1.02	-	-	bits
tSU:STA	setup time for a repeated START condition	4.7	-	.	0.6	-	-	8.12	-	-	2.06	-	-	8.15	-	-	2.06	-	-	us
tHD:DAT	data hold time	0.3	-	.	0.3	-	-	3.32	-	-	0.62	-	-	3.32	-	-	0.60	-	-	ns
tSU:DAT	data setup time	250	-	.	100	-	-	1515.08	-	-	810.07	-	-	1621.76	-	-	798.89	-	-	ns
tSU:STO	setup time for STOP condition	4	-	.	0.6	-	-	5	-	-	1.04	-	-	5.00	-	-	1.04	-	-	ns
tBUF	bus free time between a STOP and START condition	4.7	-	-	1.3	-	-	8.8	-	-	2.21	-	-	8.77	-	-	2.21	-	-	us
tVD:DAT	Data valid time	.	-	3.45	.	-	0.9	-	-	2.87	-	-	0.65	-	-	2.49	-	-	0.65	ns
tVD:ACK	Data valid ACK	.	-	3.45	.	-	0.9	-	-	3.35	-	-	0.54	-	-	3.34	-	-	0.63	ns
fSCL	SCL clock frequency	0	-	100	0	-	400	-	-	174	-	-	720	-	-	174	-	-	720	ns

5.6 JTAG

Table 11. JTAG AC Specifications

PARAMETER	DESCRIPTION	Datasheet			Measured (CMI)			Measured (FAB25)			UNITS
		MIN	TYP	MAX	MIN	TYP	MAX	MIN	TYP	MAX	
Fixed JTAG AC Specifications											
Fjtag	JTAG Operating frequency (Master)	-	-	400	-	-	400	-	-	400	KHz

5.7 Flash Memory Specifications

Table 12. Flash Memory Specifications

PARAMETER	DESCRIPTION	Datasheet			Measured (CMI)			Measured (FAB25)			UNITS
		MIN	TYP	MAX	MIN	TYP	MAX	MIN	TYP	MAX	
Flash Memory Specifications											
Fend	Flash Endurance	100K	-	-	-	-	100K	-	-	100K	cycles
Fret	Flash Retention. Ta<= 85 C, 10K P/E cycles	10	-	-	-	-	10	-	-	10	years

5.8 Cap Sense Specifications

Table 13. CapSense AC Specifications

PARAMETER	DESCRIPTION	Datasheet			Measured (CMI)			Measured (FAB25)			UNITS
		MIN	TYP	MAX	MIN	TYP	MAX	MIN	TYP	MAX	
CSD Specifications											
Vcsd	Voltage range of operation	1.71	-	5.5	1.71	-	5.5	1.71	-	5.5	V
SNR	Ratio of counts of finger to noise	5	-	-	5	-	-	5	-	-	Ratio

Document History Page

Rev.	ECN No.	Orig. of Change	Description of Change
**	6619146	SYIR	FAB25 Characterization Report.

Sales, Solutions, and Legal Information

Worldwide Sales and Design Support

Cypress maintains a worldwide network of offices, solution centers, manufacturer's representatives, and distributors. To find the office closest to you, visit us at cypress.com/sales.

Products

PSoC psoc.cypress.com
Clocks & Buffers clocks.cypress.com
Wireless wireless.cypress.com
Memories memory.cypress.com
Image Sensors image.cypress.com

PSoC Solutions

General psoc.cypress.com/solutions
Low Power/Low Voltage psoc.cypress.com/low-power
Precision Analog psoc.cypress.com/precision-analog
LCD Drive psoc.cypress.com/lcd-drive
CAN 2.0b psoc.cypress.com/can
USB psoc.cypress.com/usb

© Cypress Semiconductor Corporation, 2019. The information contained herein is subject to change without notice. Cypress Semiconductor Corporation assumes no responsibility for the use of any circuitry other than circuitry embodied in a Cypress product. Nor does it convey or imply any license under patent or other rights. Cypress products are not warranted nor intended to be used for medical, life support, life saving, critical control or safety applications, unless pursuant to an express written agreement with Cypress. Furthermore, Cypress does not authorize its products for use as critical components in life-support systems where a malfunction or failure may reasonably be expected to result in significant injury to the user. The inclusion of Cypress products in life-support systems application implies that the manufacturer assumes all risk of such use and in doing so indemnifies Cypress against all charges.

Any Source Code (software and/or firmware) is owned by Cypress Semiconductor Corporation (Cypress) and is protected by and subject to worldwide patent protection (United States and foreign), United States copyright laws and international treaty provisions. Cypress hereby grants to licensee a personal, non-exclusive, non-transferable license to copy, use, modify, create derivative works of, and compile the Cypress Source Code and derivative works for the sole purpose of creating custom software and or firmware in support of licensee product to be used only in conjunction with a Cypress integrated circuit as specified in the applicable agreement. Any reproduction, modification, translation, compilation, or representation of this Source Code except as specified above is prohibited without the express written permission of Cypress.

Disclaimer: CYPRESS MAKES NO WARRANTY OF ANY KIND, EXPRESS OR IMPLIED, WITH REGARD TO THIS MATERIAL, INCLUDING, BUT NOT LIMITED TO, THE IMPLIED WARRANTIES OF MERCHANTABILITY AND FITNESS FOR A PARTICULAR PURPOSE. Cypress reserves the right to make changes without further notice to the materials described herein. Cypress does not assume any liability arising out of the application or use of any product or circuit described herein. Cypress does not authorize its products for use as critical components in life-support systems where a malfunction or failure may reasonably be expected to result in significant injury to the user. The inclusion of Cypress' product in a life-support systems application implies that the manufacturer assumes all risk of such use and in doing so indemnifies Cypress against all charges.
Use may be limited by and subject to the applicable Cypress software license agreement.

All products and company names mentioned in this document may be the trademarks of their respective holders.

Cypress Semiconductor
Product Qualification Report

QTP# 190604 VERSION**
June 2019

USB-Serial Bridge Controller Device Family S8PF1-10P Technology, Fab 25 (Cu BEOL Interconnect)	
CY7C65210*	USB Billboard Controller
CY7C65211*	USB-Serial Single-Channel (UART/I2C/SPI) Bridge with CapSense® and BCD
CY7C65213*	USB-UART LP Bridge Controller
CY7C65215*	USB-Serial Dual Channel (UART/I2C/SPI) Bridge with CapSense® and BCD
CY7C65217*	USB Billboard Controller

FOR ANY QUESTIONS ON THIS REPORT, PLEASE CONTACT
reliability@cypress.com or via a CYLINK CRM CASE

Prepared By:
Josephine Pineda (JYF)
Sr. Staff Reliability Engineer

Reviewed By:
Sandhya Chandrashekhar (SANC)
Principal Reliability Engineer

Approved By:
David Hoffman (JYF)
Reliability Director

PRODUCT QUALIFICATION HISTORY

QTP Number	Description of Qualification Purpose	Date
151008	Qualification of S8* Technology in Fab 25 Using TSG6M Device (AL BEOL Interconnect)	Dec. 2015
151403	Qualification of PSoC® 4100 and PSoC® 4200 Device, S8PF-10R Technology in Fab 25 (AL BEOL Interconnect)	Dec. 2015
151303	Qualification of CapSense® MBR3 Device, S8PF-10R Technology in Fab 25 (AL BEOL Interconnect)	Dec. 2015
160401	Qualification of TrueTouch® Fingerprint Device, S8PFHD-10R Technology in Fab 25 (AL BEOL Interconnect)	May 2016
160301	Qualification of TrueTouch® Gen6XL Touchscreen Controller Device, S8SPF-10P Technology in Fab 25 (AL BEOL Interconnect)	June 2016
160803	Qualification of PSoC® 4000S Device, S8PFHD-10R Technology in Fab 25 (AL BEOL Interconnect)	June 2016
160207	Qualification of PSoC3 Leopard T06, S8P12-10P Technology in Fab 25 (AL BEOL Interconnect)	July 2016
160702	Qualification of PSoC® 4200L, S8SPF-10P Technology in Fab 25 (AL BEOL Interconnect)	Sept. 2016
160701	Qualification of PSoC® 4200L, S8SPF-10P Technology in Fab 25 (Cu BEOL Interconnect)	Apr. 2017
172307	Qualification of PSoC® 4200L Fix TO Metal Mask Non-Minor Add-On, S8SPF-10P Technology in Fab 25 (Cu BEOL Interconnect)	Nov. 2017
173204	Qualification of PSoC® 4100S Plus Device, S8SPFHD-10 Technology in Fab 25 (Cu BEOL Interconnect)	Dec. 2017
175110	Qualification of CapSense® MBR3 Device Family, S8PF-10R Technology in Fab 25 (Cu BEOL Interconnect)	Sept. 2018
155101	Qualification of PSoC Analog Coprocessor Device Family, S8PFHD-10 Technology in Fab 25 (AL BEOL Interconnect)	Oct. 2018
171802	Qualification of PSoC® 4100 and PSoC® 4200 Device, S8PF-10R Technology in Fab 25 (Cu BEOL Interconnect)	Jan. 2019
190604	Qualification of USB-Serial Bridge Controller Device Family S8PF1-10P Technology, Fab 25 (Cu BEOL Interconnect)	June 2019

PRODUCT DESCRIPTION (for qualification)	
Qualification Purpose: To qualify USB-Serial Bridge Controller Device Family, S8PF1-10P Technology, Fab 25 (Cu BEOL Interconnect)	
Marketing Part #:	CY7C65210*/ CY7C65211*/ CY7C65213*/ CY7C65215*/ CY7C65217*
Device Description:	USB-Serial Bridge Controller Device Family
Cypress Division:	Cypress Semiconductor Corporation – MCU and Connectivity Division (MCD)

TECHNOLOGY/FAB PROCESS DESCRIPTION			
Number of Metal Layers:	Proprietary	Metal Composition:	Proprietary
Passivation Type and Thickness:			Proprietary
Generic Process Technology/Design Rule:			Proprietary
Gate Oxide Material/Thickness (MOS):			Proprietary
Name/Location of Die Fab (prime) Facility:			Cypress, Fab 25
Die Fab Line ID/Wafer Process ID:			Fab 25 / S8PF1-10P

MAJOR PACKAGE INFORMATION USED IN THIS QUALIFICATION	
Package Designation:	LT32B
Package Outline, Type, or Name:	32-Pin QFN
Mold Compound Name/Manufacturer:	GE 7470LA/Nitto
Mold Compound Flammability Rating:	V-0 / UL94
Oxygen Rating Index:	54%
Lead Frame Material:	Copper
Lead Finish, Composition / Thickness:	NiPdAu
Die Backside Preparation Method/Metallization:	Backgrind
Die Separation Method:	Wafer Saw
Die Attach Supplier:	Henkel
Die Attach Material:	QMI-519
Bond Diagram Designation:	001-83370
Wire Bond Method:	Thermosonic
Wire Material/Size:	CuPd / 0.8 mil (20um)
Assembly Process Flow:	001-87319
Name/Location of Assembly (prime) facility:	CML-RA
MSL Level	3
Reflow Profile	260C

ELECTRICAL TEST / FINISH DESCRIPTION	
Test Location:	ASE-Taiwan, CML-R

RELIABILITY TESTS PERFORMED PER SPECIFICATION REQUIREMENTS

Stress/Test	Test Condition (Temp/Bias)	Result P/F
Acoustic Microscopy	Precondition: JESD22 Moisture Sensitivity Level (192 Hrs., 30 °C, 60% RH, 260°C Reflow)	P
Ball Shear	JESD22-B116, Cpk : 1.33, Ppk : 1.66	P
Bond Pull	MIL-STD-883 – Method 2011, Cpk : 1.33, Ppk : 1.66	P
Data Retention	150°C, 1000 Hours JESD22-A117 and JESD22-A103	P
Die Shear	MIL-STD-883, Method 2019	P
Endurance Test	Per Datasheet (100K Cycles), JESD22-A117	P
Electrostatic Discharge Human Body Model (ESD-HBM)	1,100V/2,200V /3,300V JESD22, Method A114	P
Electrostatic Discharge Charge Device Model (ESD-CDM)	500V /750V/,1000V JESD22-C101	P
High Accelerated Saturation Test (HAST)	JEDEC STD 22-A110: 130°C, 85% RH, 5.5V, 96 Hours Precondition: JESD22 Moisture Sensitivity Level (192 Hrs., 30°C, 60% RH, 260°C Reflow)	P
High Temperature Operating Life Early Failure Rate (EFR)	Dynamic Operating Condition, 150°C, 1.2V/1.95V/2.07V/5.75V 48 Hours JESD22-A-108	P
High Temperature Operating Life Latent Failure Rate (LFR)	Dynamic Operating Condition, 150°C, 1.2V/2.07V/5.75V, 500 Hours JESD22-A-108	P
Low Temperature Operating Life	Dynamic Operating Condition, -40°C JESD22-A108	P
Pressure Cooker	JESD22-A102:121°C /100%RH, 15 PSIG, 168 Hours Precondition: JESD22 Moisture Sensitivity Level (192 Hrs., 30°C, 60% RH, 260°C Reflow)	P
Physical Dimension	MIL-STD-1835, JESD22-B100	P
Temperature Cycle	MIL-STD-883, Method 1010, Condition C, -65°C to 150°C, 500 Cycles / 1000Cycles Precondition: JESD22 Moisture Sensitivity Level (192 Hrs., 30°C, 60% RH, 260°C Reflow)	P
Static Latch-up	± 100/140mA, 125C/85°C/ ± 200mA, 85°C / ± 300mA, 85°C JESD78	P
X-Ray	MIL-STD-883 - 2012	P

RELIABILITY FAILURE RATE SUMMARY

Stress/Test	Device Tested/ Device Hours	# Fails	Activation Energy	Thermal AF[3]	Failure Rate
High Temperature Operating Life Early Failure Rate	1,550 Devices	0	N/A	N/A	0 PPM [1]
High Temperature Operating Life Long Term Failure Rate	630,000	0	0.7	170	9 FIT [2]

1. EFR devices number is based on QTP# 190604 EFR data.
2. LFR device hours are based on QTP#151008, QTP#151403, QTP#151303, QTP#160301, QTP#160207, QTP#160702, QTP#160701, QTP#172307, QTP#175110 and QTP#155101 LFR data.

[1] Assuming an ambient temperature of 55°C and a junction temperature rise of 15°C.
[2] Chi-squared 60% estimations used to calculate the failure rate.
[3] Thermal Acceleration Factor is calculated from the Arrhenius equation

$$AF = \exp\left[\frac{E_A}{k}\left[\frac{1}{T_2} - \frac{1}{T_1}\right]\right]$$

where:

E_A =The Activation Energy of the defect mechanism.
K = Boltzmann's constant = 8.62×10^{-5} eV/Kelvin.
T_1 is the junction temperature of the device under stress and T_2 is the junction temperature of the device at use conditions.

Reliability Test Data

QTP #: 151008

Device	Fab Lot #	Assy Lot #	Assy Loc	Duration	Samp	Rej	Failure Mechanism
STRESS: ACOUSTIC, MSL3							
CYTT214032 (8CP206101)	4539372	611534008	CML-RA	COMP	15	0	
CYTT214032 (8CP206101)	4540145	611534709	CML-RA	COMP	15	0	
CY8C42452 (8CP44200)	4537464	611531543	CML-RA	COMP	15	0	
STRESS: DATA RETENTION, PLASTIC, 150C							
CYTT214032 (8CP206101)	4539372	611534008	CML-RA	500	80	0	
CYTT214032 (8CP206101)	4539372	611534008	CML-RA	1000	80	0	
CYTT214032 (8CP206101)	4540145	611534709	CML-RA	500	80	0	
CYTT214032 (8CP206101)	4540145	611534709	CML-RA	1000	80	0	
CY8C42452 (8CP44200)	4537464	611531543	CML-RA	500	80	0	
STRESS: DATA RETENTION, PLASTIC, 175C							
CYTT214032 (8CP206101)	4539372	611534008	CML-RA	76	80	0	
CYTT214032 (8CP206101)	4539372	611534008	CML-RA	152	79	0	
CYTT214032 (8CP206101)	4540145	611534709	CML-RA	76	80	0	
CYTT214032 (8CP206101)	4540145	611534709	CML-RA	152	80	0	
CY8C42452 (8CP44200)	4537464	611531543	CML-RA	76	80	0	
CY8C42452 (8CP44200)	4537464	611531543	CML-RA	152	80	0	
STRESS: HIGH TEMP DYNAMIC OPERATING LIFE-EARLY FAILURE RATE (150, 2.07V, Vcc Max)							
CYTT214032 (8CP206101)	4539372	611534008	CML-RA	48	1490	0	
CYTT214032 (8CP206101)	4540145	611534709	CML-RA	48	1510	0	
CYTT214032 (8CP206101)	4545249	611537364	CML-RA	48	1547	0	
STRESS: ENDURANCE							
CYTT214032 (8CP206101)	4539372	611534008	CML-RA	Cycling	78	0	
CYTT214032 (8CP206101)	4539372	611534008	CML-RA	168	78	0	
CYTT214032 (8CP206101)	4539372	611534008	CML-RA	500	78	0	
CYTT214032 (8CP206101)	4540145	611534709	CML-RA	168	80	0	
CYTT214032 (8CP206101)	4540145	611534709	CML-RA	500	80	0	
CY8C42452 (8CP44200)	4537464	611531543	CML-RA	168	80	0	
CY8C42452 (8CP44200)	4537464	611531543	CML-RA	500	80	0	
STRESS: ESD-CHARGE DEVICE MODEL							
CYTT214032 (8CP206101)	4539372	611534008	CML-RA	500	9	0	
CYTT214032 (8CP206101)	4539372	611534008	CML-RA	750	3	0	
CYTT214032 (8CP206101)	4539372	611534008	CML-RA	1000	3	0	
CYTT214032 (8CP206101)	4539372	611534008	CML-RA	1250	3	0	
CYTT214032 (8CP206101)	4539372	611534008	CML-RA	1500	3	0	
CYTT214032 (8CP206101)	4539372	611534008	CML-RA	1750	3	0	

Reliability Test Data

QTP #: 151008

Device	Fab Lot #	Assy Lot #	Assy Loc	Duration	Samp	Rej	Failure Mechanism
STRESS: ESD-CHARGE DEVICE MODEL							
CYTT214032 (8CP206101)	4540145	611534709	CML-RA	500	9	0	
CYTT214032 (8CP206101)	4540145	611534709	CML-RA	750	3	0	
CYTT214032 (8CP206101)	4540145	611534709	CML-RA	1000	3	0	
CYTT214032 (8CP206101)	4540145	611534709	CML-RA	1250	3	0	
CYTT214032 (8CP206101)	4540145	611534709	CML-RA	1500	3	0	
CYTT214032 (8CP206101)	4540145	611534709	CML-RA	1750	3	0	
CY8C42452 (8CP44200)	4537464	611531543	CML-RA	500	9	0	
CY8C42452 (8CP44200)	4537464	611531543	CML-RA	750	3	0	
CY8C42452 (8CP44200)	4537464	611531543	CML-RA	1000	3	0	
CY8C42452 (8CP44200)	4537464	611531543	CML-RA	1250	3	0	
CY8C42452 (8CP44200)	4537464	611531543	CML-RA	1500	3	0	
CY8C42452 (8CP44200)	4537464	611531543	CML-RA	1750	3	0	
STRESS: ESD-HUMAN BODY MODEL PER JESD22, METHOD A114							
CYTT214032 (8CP206101)	4539372	611534008	CML-RA	1100	3	0	
CYTT214032 (8CP206101)	4539372	611534008	CML-RA	2200	8	0	
CYTT214032 (8CP206101)	4539372	611534008	CML-RA	3300	3	0	
CYTT214032 (8CP206101)	4539372	611534008	CML-RA	4000	3	0	
CYTT214032 (8CP206101)	4539372	611534008	CML-RA	5000	3	0	
CYTT214032 (8CP206101)	4540145	611534709	CML-RA	1100	3	0	
CYTT214032 (8CP206101)	4540145	611534709	CML-RA	2200	8	0	
CYTT214032 (8CP206101)	4540145	611534709	CML-RA	3300	3	0	
CYTT214032 (8CP206101)	4540145	611534709	CML-RA	4000	3	0	
CY8C42452 (8CP44200)	4537464	611531543	CML-RA	1100	3	0	
CY8C42452 (8CP44200)	4537464	611531543	CML-RA	2200	8	0	
CY8C42452 (8CP44200)	4537464	611531543	CML-RA	3300	3	0	
CY8C42452 (8CP44200)	4537464	611531543	CML-RA	4000	3	0	
STRESS: HI-ACCEL SATURATION TEST (130C, 85%RH, 5.5V), PRE COND 192 HR 30C/60%RH (MSL3)							
CYTT214032 (8CP206101)	4539372	611534008	CML-RA	96	30	0	
CYTT214032 (8CP206101)	4540145	611534709	CML-RA	96	30	0	
STRESS: HIGH TEMP DYNAMIC OPERATING LIFE-LATENT FAILURE RATE (150C, 2.07V, Vcc Max)							
CYTT214032 (8CP206101)	4539372	611534008	CML-RA	80	116	0	
CYTT214032 (8CP206101)	4539372	611534008	CML-RA	500	116	0	
CYTT214032 (8CP206101)	4540145	611534709	CML-RA	80	120	0	
CYTT214032 (8CP206101)	4540145	611534709	CML-RA	500	120	0	

Reliability Test Data

QTP #: 151008

Device	Fab Lot #	Assy Lot #	Assy Loc	Duration	Samp	Rej	Failure Mechanism
STRESS: LOW TEMPERATURE OPERATING LIFE, -40C							
CYTT214032 (8CP206101)	4539372	611534008	CML-RA	160	40	0	
CYTT214032 (8CP206101)	4539372	611534008	CML-RA	380	40	0	
STRESS: PRESSURE COOKER TEST (121C, 100%RH), 15 Psig, PRE COND 192 HR 30C/60%RH (MSL3)							
CYTT214032 (8CP206101)	4539372	611534008	CML-RA	168	75	0	
CYTT214032 (8CP206101)	4540145	611534709	CML-RA	168	78	0	
CY8C42452 (8CP44200)	4537464	611531543	CML-RA	168	80	0	
CY8C42452 (8CP44200)	4537464	611531543	CML-RA	288	80	0	
STRESS: PRE/POST LFR PARAMETER ASSESSMENT							
CYTT214032 (8CP206101)	4539372	611534008	CML-RA	COMP	10+2	0	
CYTT214032 (8CP206101)	4540145	611534709	CML-RA	COMP	10+2	0	
CY8C42452 (8CP44200)	4537464	611531543	CML-RA	COMP	10+2	0	
STRESS: STATIC LATCH-UP (85C, 140mA)							
CYTT214032 (8CP206101)	4539372	611534008	CML-RA	COMP	6	0	
CYTT214032 (8CP206101)	4540145	611534709	CML-RA	COMP	6	0	
CY8C42452 (8CP44200)	4537464	611531543	CML-RA	COMP	6	0	
STRESS: STATIC LATCH-UP (85C, 200mA)							
CYTT214032 (8CP206101)	4539372	611534008	CML-RA	COMP	3	0	
CYTT214032 (8CP206101)	4540145	611534709	CML-RA	COMP	3	0	
CY8C42452 (8CP44200)	4537464	611531543	CML-RA	COMP	3	0	
STRESS: STATIC LATCH-UP (85C, 300mA)							
CYTT214032 (8CP206101)	4539372	611534008	CML-RA	COMP	3	0	
CYTT214032 (8CP206101)	4540145	611534709	CML-RA	COMP	3	0	
CY8C42452 (8CP44200)	4537464	611531543	CML-RA	COMP	3	0	
STRESS: SEM CROSS SECTION							
CYTT214032 (8CP206101)	4539372	611534008	CML-RA	COMP	1	0	
STRESS: TC COND. C -65C TO 150C, PRE COND 192 HRS 30C/60%RH (MSL3)							
CYTT214032 (8CP206101)	4539372	611534008	CML-RA	500	80	0	
CYTT214032 (8CP206101)	4539372	611534008	CML-RA	1000	80	0	
CYTT214032 (8CP206101)	4540145	611534709	CML-RA	500	80	0	
CY8C42452 (8CP44200)	4537464	611531543	CML-RA	500	79	0	
CY8C42452 (8CP44200)	4537464	611531543	CML-RA	1000	79	0	
STRESS: THERMAL JUNCTION MEASUREMENT							
CYTT214032 (8CP206101)	4539372	611534008	CML-RA	COMP	1	0	

Reliability Test Data

QTP #: 151403

Device	Fab Lot #	Assy Lot #	Assy Loc	Duration	Samp	Rej	Failure Mechanism
STRESS: ACOUSTIC, MSL3							
CY8C42452A(8CP44200DB)	4537464	611531543	CML-R	COMP	15	0	
STRESS: DATA RETENTION, PLASTIC, 150C							
CY8C42452A(8CP44200DB)	4537464	611531543	CML-R	500	80	0	
STRESS: DATA RETENTION, PLASTIC, 175C							
CY8C42452A(8CP44200DB)	4537464	611531543	CML-R	76	80	0	
CY8C42452A(8CP44200DB)	4537464	611531543	CML-R	152	80	0	
STRESS: HIGH TEMP DYNAMIC OPERATING LIFE-EARLY FAILURE RATE (150C, 2.07V, Vcc Max)							
CY8C42452A(8CP44200DB)	4537464	611531543	CML-R	48	1510	0	
STRESS: ENDURANCE							
CY8C42452A(8CP44200DB)	4537464	611531543	CML-R	Cycling	80	0	
CY8C42452A(8CP44200DB)	4537464	611531543	CML-R	168	80	0	
CY8C42452A(8CP44200DB)	4537464	611531543	CML-R	500	80	0	
STRESS: ESD-CHARGE DEVICE MODEL							
CY8C42452A(8CP44200DB)	4537464	611531543	CML-R	500	9	0	
CY8C42452A(8CP44200DB)	4537464	611531543	CML-R	750	3	0	
CY8C42452A(8CP44200DB)	4537464	611531543	CML-R	1000	3	0	
CY8C42452A(8CP44200DB)	4537464	611531543	CML-R	1250	3	0	
CY8C42452A(8CP44200DB)	4537464	611531543	CML-R	1500	3	0	
CY8C42452A(8CP44200DB)	4537464	611531543	CML-R	1750	3	0	
CY8C42452A(8CP44200DB)	4537464	611531543	CML-R	2000	3	0	
STRESS: ESD-HUMAN BODY MODEL PER JESD22, METHOD A114							
CY8C42452A(8CP44200DB)	4537464	611531543	CML-R	1100	3	0	
CY8C42452A(8CP44200DB)	4537464	611531543	CML-R	2200	8	0	
CY8C42452A(8CP44200DB)	4537464	611531543	CML-R	3300	3	0	
CY8C42452A(8CP44200DB)	4537464	611531543	CML-R	4000	3	0	
STRESS: HIGH TEMP DYNAMIC OPERATING LIFE-LATENT FAILURE RATE (150C, 2.07V, Vcc Max)							
CY8C42452A(8CP44200DB)	4537464	611531543	CML-R	80	120	0	
CY8C42452A(8CP44200DB)	4537464	611531543	CML-R	500	120	0	
STRESS: PRESSURE COOKER TEST (121C, 100%RH), 15 Psig, PRE COND 192 HR 30C/60%RH (MSL3)							
CY8C42452A(8CP44200DB)	4537464	611531543	CML-R	168	80	0	
CY8C42452A(8CP44200DB)	4537464	611531543	CML-R	288	80	0	
STRESS: PRE/POST LFR PARAMETER ASSESSMENT							
CY8C42452A(8CP44200DB)	4537464	611531543	CML-R	COMP	10+2	0	
STRESS: STATIC LATCH-UP (85C, 140mA)							
CY8C42452A(8CP44200DB)	4537464	611531543	CML-R	COMP	6	0	
STRESS: STATIC LATCH-UP (85C, 200mA)							
CY8C42452A(8CP44200DB)	4537464	611531543	CML-R	COMP	3	0	
STRESS: STATIC LATCH-UP (125C, 140mA)							
CY8C42452A(8CP44200DB)	4537464	611531543	CML-R	COMP	3	0	

Reliability Test Data

QTP #: 151403

Device	Fab Lot #	Assy Lot #	Assy Loc	Duration	Samp	Rej	Failure Mechanism
STRESS: STATIC LATCH-UP (85C, 300mA)							
CY8C42452A(8CP44200DB)	4537464	611531543	CML-R	COMP	3	0	
STRESS: TC COND. C -65C TO 150C, PRE COND 192 HRS 30C/60%RH (MSL3)							
CY8C42452A(8CP44200DB)	4537464	611531543	CML-R	500	79	0	
CY8C42452A(8CP44200DB)	4537464	611531543	CML-R	1000	79	0	
STRESS: HIGH TEMP DYNAMIC OPERATING LIFE-EARLY FAILURE RATE (150C, 2.07V, Vcc Max)							
CY8C42452A(8CP44200DB)	4537464	611531543	CML-R	48	1469	0	

Reliability Test Data

QTP #: 151303

Device	Fab Lot #	Assy Lot #	Assy Loc	Duration	Samp	Rej	Failure Mechanism
STRESS: ACOUSTIC, MSL3							
CY8CMBR3106S2(8CP44304)	4542914	611534639	CML-RA	COMP	15	0	
STRESS: DATA RETENTION, PLASTIC, 150C							
CY8CMBR3106S2(8CP44304)	4542914	611534639	CML-RA	500	80	0	
STRESS: DATA RETENTION, PLASTIC, 175C							
CY8CMBR3106S2(8CP44304)	4542914	611534639	CML-RA	76	80	0	
CY8CMBR3106S2(8CP44304)	4542914	611534639	CML-RA	152	80	0	
STRESS: HIGH TEMP DYNAMIC OPERATING LIFE-EARLY FAILURE RATE (150C, 2.07V, Vcc Max)							
CY8CMBR31552 (8CP44303CB)	4542914	611534693	ASE-G	48	1469	0	
STRESS: ENDURANCE							
CY8CMBR31552 (8CP44303CB)	4542914	611534693	ASE-G	Cycling	80	0	
CY8CMBR31552 (8CP44303CB)	4542914	611534693	ASE-G	168	80	0	
CY8CMBR31552 (8CP44303CB)	4542914	611534693	ASE-G	500	80	0	
STRESS: ESD-CHARGE DEVICE MODEL							
CY8CMBR3106S2(8CP44304)	4542914	611534639	CML-RA	500	9	0	
CY8CMBR3106S2(8CP44304)	4542914	611534639	CML-RA	750	3	0	
CY8CMBR3106S2(8CP44304)	4542914	611534639	CML-RA	1000	3	0	
CY8CMBR3106S2(8CP44304)	4542914	611534639	CML-RA	1250	3	0	
CY8CMBR3106S2(8CP44304)	4542914	611534639	CML-RA	1500	3	0	
CY8CMBR3106S2(8CP44304)	4542914	611534639	CML-RA	1750	3	0	
STRESS: ESD-HUMAN BODY MODEL PER JESD22, METHOD A114							
CY8CMBR3106S2(8CP44304)	4542914	611534639	CML-RA	1100	3	0	
CY8CMBR3106S2(8CP44304)	4542914	611534639	CML-RA	2200	8	0	
CY8CMBR3106S2(8CP44304)	4542914	611534639	CML-RA	3300	3	0	
CY8CMBR3106S2(8CP44304)	4542914	611534639	CML-RA	4000	3	0	
CY8CMBR3106S2(8CP44304)	4542914	611534639	CML-RA	5000	3	0	
CY8CMBR3106S2(8CP44304)	4542914	611534639	CML-RA	6000	3	0	
CY8CMBR3106S2(8CP44304)	4542914	611534639	CML-RA	7000	3	0	
STRESS: HIGH TEMP DYNAMIC OPERATING LIFE-LATENT FAILURE RATE (150C, 2.07V, Vcc Max)							
CY8CMBR31552(8CP44303CB)	4542914	611534693	ASE-G	80	120	0	
CY8CMBR31552(8CP44303CB)	4542914	611534693	ASE-G	500	120	0	
STRESS: PRESSURE COOKER TEST (121C, 100%RH), 15 Psig, PRE COND 192 HR 30C/60%RH (MSL3)							
CY8CMBR3106S2(8CP44304)	4542914	611534639	CML-RA	168	80	0	
CY8CMBR3106S2(8CP44304)	4542914	611534639	CML-RA	288	79	0	
STRESS: PRE/POST LFR PARAMETER ASSESSMENT							
CY8CMBR31552(8CP44303CB)	4542914	611534693	ASE-G	COMP	10+2	0	

Reliability Test Data

QTP #: 151303

Device	Fab Lot #	Assy Lot #	Assy Loc	Duration	Samp	Rej	Failure Mechanism
STRESS: STATIC LATCH-UP (85C, 140mA)							
CY8CMBR3106S2(8CP44304)	4542914	611534639	CML-RA	COMP	6	0	
STRESS: STATIC LATCH-UP (85C, 200mA)							
CY8CMBR3106S2(8CP44304)	4542914	611534639	CML-RA	COMP	3	0	
STRESS: STATIC LATCH-UP (125C, 140mA)							
CY8CMBR3106S2(8CP44304)	4542914	611534639	CML-RA	COMP	3	0	
STRESS: STATIC LATCH-UP (85C, 300mA)							
CY8CMBR3106S2(8CP44304)	4542914	611534639	CML-RA	COMP	3	0	
STRESS: TC COND. C -65C TO 150C, PRE COND 192 HRS 30C/60%RH (MSL3)							
CY8CMBR3106S2(8CP44304)	4542914	611534639	CML-RA	500	80	0	
CY8CMBR3106S2(8CP44304)	4542914	611534639	CML-RA	1000	80	0	

Reliability Test Data

QTP #: 160401

Device	Fab Lot #	Assy Lot #	Assy Loc	Duration	Samp	Rej	Failure Mechanism
STRESS: ACOUSTIC, MSL3							
CYFPA1 (8CP2F1001BB)	3609025	611610290	CML-R	COMP	15	0	
STRESS: DATA RETENTION, PLASTIC, 150C							
CY8C42452(8CP44200DB)	4537464	611531543	CML-RA	500	80	0	
CY8C42452(8CP44200DB)	4537464	611531543	CML-RA	1000	80	0	
STRESS: HIGH TEMP DYNAMIC OPERATING LIFE-EARLY FAILURE RATE (150C, 2.07V, Vcc Max)							
CYFPA1 (8CP2F1001BB)	3609025	611610290	CML-R	48	1550	0	
STRESS: ENDURANCE							
CY8C42452(8CP44200DB)	4537464	611531543	CML-RA	Cycling	80	0	
CY8C42452(8CP44200DB)	4537464	611531543	CML-RA	168	80	0	
CY8C42452(8CP44200DB)	4537464	611531543	CML-RA	1000	80	0	
STRESS: ESD-CHARGE DEVICE MODEL							
CYFPA1 (8CP2F1001BB)	3609025	611610290	CML-R	500	9	0	
CYFPA1 (8CP2F1001BB)	3609025	611610290	CML-R	750	3	0	
CYFPA1 (8CP2F1001BB)	3609025	611610290	CML-R	1000	3	0	
STRESS: ESD-HUMAN BODY MODEL PER JESD22, METHOD A114							
CYFPA1 (8CP2F1001BB)	3609025	611610290	CML-R	1100	3	0	
CYFPA1 (8CP2F1001BB)	3609025	611610290	CML-R	2200	3	0	
CYFPA1 (8CP2F1001BB)	3609025	611610290	CML-R	3300	3	0	
STRESS: PRESSURE COOKER TEST (121C, 100%RH), 15 Psig, PRE COND 192 HR 30C/60%RH (MSL3)							
CYFPA1 (8CP2F1001BB)	3609025	611610290	CML-R	168	80	0	
CYFPA1 (8CP2F1001BB)	3609025	611610290	CML-R	168	76	0	
STRESS: STATIC LATCH-UP (125C, 100mA)							
CYFPA1 (8CP2F1001BB)	3609025	611610290	CML-R	COMP	3	0	
STRESS: STATIC LATCH-UP (125C, 140mA)							
CYFPA1 (8CP2F1001BB)	3609025	611610290	CML-R	COMP	3	0	
STRESS: STATIC LATCH-UP (85C, 200mA)							
CYFPA1 (8CP2F1001BB)	3609025	611610290	CML-R	COMP	3	0	
STRESS: STATIC LATCH-UP (85C, 300mA)							
CYFPA1 (8CP2F1001BB)	3609025	611610290	CML-R	COMP	3	0	
STRESS: TC COND. C -65C TO 150C, PRE COND 192 HRS 30C/60%RH (MSL3)							
CYFPA1 (8CP2F1001BB)	3609025	611610290	CML-R	500	78	0	
CYFPA1 (8CP2F1001BB)	3609025	611610290	CML-R	1000	76	0	

Reliability Test Data

QTP #: 160301

Device	Fab Lot #	Assy Lot #	Assy Loc	Duration	Samp	Rej	Failure Mechanism
STRESS: DATA RETENTION, PLASTIC, 150C							
CYAT816882 (8C206802BB)	3613017	611611087	CML-R	500	80	0	
CYAT816882 (8C206802BB)	3613017	611611087	CML-R	1000	80	0	
STRESS: DATA RETENTION, PLASTIC, 175C							
CYAT816882 (8C206802BB)	3613017	611611087	CML-R	76	80	0	
CYAT816882 (8C206802BB)	3613017	611611087	CML-R	152	80	0	
STRESS: HIGH TEMP DYNAMIC OPERATING LIFE-EARLY FAILURE RATE (150C, 2.07V, Vcc Max)							
CYAT816882 (8C206802BB)	3613017	611611087	CML-R	48	2609	1	No Visual Defect found
CYAT816882 (8C206802BB)	3617006	611617664	CML-R	48	1013	0	
STRESS: ENDURANCE							
CYAT816882 (8C206802BB)	3613017	611611087	CML-R	Cycling	80	0	
CYAT816882 (8C206802BB)	3613017	611611087	CML-R	500	80	0	
CYAT816882 (8C206802BB)	3613017	611611087	CML-R	1000	80	0	
STRESS: ESD-CHARGE DEVICE MODEL							
CYAT816882 (8C206802BB)	3613017	611611087	CML-R	500	9	0	
CYAT816882 (8C206802BB)	3613017	611611087	CML-R	750	3	0	
CYAT816882 (8C206802BB)	3613017	611611087	CML-R	1000	3	0	
STRESS: ESD-CHARGE DEVICE MODEL							
CYTT417012 (8CP206801BB)	3613017	611614958	CML-R	500	9	0	
CYTT417012 (8CP206801BB)	3613017	611614958	CML-R	1000	3	0	
CYTT417012 (8CP206801BB)	3613017	611614958	CML-R	1250	3	0	
CYTT417012 (8CP206801BB)	3613017	611614958	CML-R	1500	3	0	
CYTT417012 (8CP206801BB)	3613017	611614958	CML-R	1750	3	0	
CYTT417012 (8CP206801BB)	3613017	611614958	CML-R	2000	3	0	
STRESS: ESD-HUMAN BODY MODEL PER JESD22, METHOD A114							
CYAT816882 (8C206802BB)	3613017	611611087	CML-R	1100	3	0	
CYAT816882 (8C206802BB)	3613017	611611087	CML-R	2200	8	0	
CYAT816882 (8C206802BB)	3613017	611611087	CML-R	3300	3	0	
CYAT816882 (8C206802BB)	3613017	611611087	CML-R	4000	3	0	
CYAT816882 (8C206802BB)	3613017	611611087	CML-R	5000	3	0	
CYAT816882 (8C206802BB)	3613017	611611087	CML-R	6000	3	0	
CYAT816882 (8C206802BB)	3613017	611611087	CML-R	7000	3	0	
STRESS: HIGH TEMP DYNAMIC OPERATING LIFE-LATENT FAILURE RATE (150C, 2.07V, Vcc Max)							
CYAT816882 (8C206802BB)	3613017	611611087	CML-R	500	99	0	
STRESS: PRE/POST LFR PARAMETER ASSESSMENT							
CYAT816882 (8C206802BB)	3613017	611611087	CML-R	COMP	10	0	
STRESS: STATIC LATCH-UP (125C, 140mA)							
CYAT816882 (8C206802BB)	3613017	611611087	CML-R	COMP	3	0	

Reliability Test Data

QTP #: 160301

Device	Fab Lot #	Assy Lot #	Assy Loc	Duration	Samp	Rej	Failure Mechanism
STRESS: STATIC LATCH-UP (85C, 140mA)							
CYAT816882 (8C206802BB)	3613017	611611087	CML-R	COMP	3	0	
STRESS: STATIC LATCH-UP (85C, 200mA)							
CYAT816882 (8C206802BB)	3613017	611611087	CML-R	COMP	3	0	
STRESS: STATIC LATCH-UP (85C, 300mA)							
CYAT816882 (8C206802BB)	3613017	611611087	CML-R	COMP	3	0	
STRESS: TC COND. C -65C TO 150C, PRE COND 192 HRS 30C/60%RH (MSL3)							
CYAT816882 (8C206802BB)	3613017	611611087	CML-R	500	80	0	
CYAT816882 (8C206802BB)	3613017	611611087	CML-R	1000	80	0	

Reliability Test Data

QTP #: 160803

Device	Fab Lot #	Assy Lot #	Assy Loc	Duration	Samp	Rej	Failure Mechanism
STRESS: HIGH TEMP DYNAMIC OPERATING LIFE-EARLY FAILURE RATE (150C, 2.07V, Vcc Max)							
CY8C4045 (8CP40003BB)	3615013	611612344	OSE-T	48	1596	0	
STRESS: ESD-CHARGE DEVICE MODEL							
CY8C4045 (8CP40003BB)	3615013	611612344	OSE-T	500	9	0	
CY8C4045 (8CP40003BB)	3615013	611612344	OSE-T	750	3	0	
CY8C4045 (8CP40003BB)	3615013	611612344	OSE-T	1000	3	0	
CY8C4045 (8CP40003BB)	3615013	611612344	OSE-T	1250	3	0	
CY8C4045 (8CP40003BB)	3615013	611612344	OSE-T	1500	3	0	
STRESS: ESD-HUMAN BODY MODEL PER JESD22, METHOD A114							
CY8C4045 (8CP40003BB)	3615013	611612344	OSE-T	1100	3	0	
CY8C4045 (8CP40003BB)	3615013	611612344	OSE-T	2200	8	0	
CY8C4045 (8CP40003BB)	3615013	611612344	OSE-T	3300	3	0	
CY8C4045 (8CP40003BB)	3615013	611612344	OSE-T	4000	3	0	
CY8C4045 (8CP40003BB)	3615013	611612344	OSE-T	5000	3	0	
CY8C4045 (8CP40003BB)	3615013	611612344	OSE-T	6000	3	0	
CY8C4045 (8CP40003BB)	3615013	611612344	OSE-T	7000	3	0	
STRESS: STATIC LATCH-UP (125C, 100mA)							
CY8C4045 (8CP40003BB)	3615013	611612344	OSE-T	COMP	3	0	
STRESS: STATIC LATCH-UP (125C, 140mA)							
CY8C4045 (8CP40003BB)	3615013	611612344	OSE-T	COMP	3	0	
STRESS: STATIC LATCH-UP (85C, 140mA)							
CY8C4045 (8CP40003BB)	3615013	611612344	OSE-T	COMP	3	0	
STRESS: STATIC LATCH-UP (85C, 200mA)							
CY8C4045 (8CP40003BB)	3615013	611612344	OSE-T	COMP	3	0	
STRESS: STATIC LATCH-UP (85C, 300mA)							
CY8C4045 (8CP40003BB)	3615013	611612344	OSE-T	COMP	3	0	

Reliability Test Data

QTP #: 160207

Device	Fab Lot #	Assy Lot #	Assy Loc	Duration	Samp	Rej	Failure Mechanism
STRESS: ACOUSTIC, MSL3							
CY8C3866A (8CP38661HB)	3617013	611615839	CML-R	COMP	15	0	
STRESS: DATA RETENTION, PLASTIC, 150C							
CY8C3866A (8CP38661HB)	3617013	611615839	CML-R	500	90	0	
CY8C3866A (8CP38661HB)	3617013	611615839	CML-R	1000	90	0	
STRESS: DATA RETENTION, PLASTIC, 175C							
CY8C3866A (8CP38661HB)	3617013	611615839	CML-R	76	90	0	
CY8C3866A (8CP38661HB)	3617013	611615839	CML-R	152	90	0	
STRESS: HIGH TEMP DYNAMIC OPERATING LIFE-EARLY FAILURE RATE (150C, 5.75V, Vcc Max)							
CY8C3866A (8CP38661HB)	3617013	611615839	CML-R	48	2303	0	
STRESS: ENDURANCE							
CY8C3866A (8CP38661HB)	3617013	611615839	CML-R	Cycling	90	0	
CY8C3866A (8CP38661HB)	3617013	611615839	CML-R	168	90	0	
CY8C3866A (8CP38661HB)	3617013	611615839	CML-R	500	90	0	
STRESS: ESD-CHARGE DEVICE MODEL							
CY8C3866A (8CP38661HB)	3617013	611615839	CML-R	500	9	0	
STRESS: ESD-HUMAN BODY MODEL PER JESD22, METHOD A114							
CY8C3866A (8CP38661HB)	3617013	611615839	CML-R	1100	3	0	
CY8C3866A (8CP38661HB)	3617013	611615839	CML-R	2200	8	0	
STRESS: HI-ACCEL SATURATION TEST (130C, 85%RH, 5.5V), PRE COND 192 HR 30C/60%RH (MSL3)							
CY8C3866A (8CP38661HB)	3617013	611615839	CML-R	96	30	0	
STRESS: HIGH TEMP DYNAMIC OPERATING LIFE-LATENT FAILURE RATE (150C, 5.75V, Vcc Max)							
CY8C3866A (8CP38661HB)	3617013	611615839	CML-R	500	125	0	
STRESS: PRESSURE COOKER TEST (121C, 100%RH), 15 Psig, PRE COND 192 HR 30C/60%RH (MSL3)							
CY8C3866A (8CP38661HB)	3617013	611615839	CML-R	168	78	0	
STRESS: STATIC LATCH-UP (125C, 100mA)							
CY8C3866A (8CP38661HB)	3617013	611615839	CML-R	COMP	3	0	
STRESS: STATIC LATCH-UP (125C, 140mA)							
CY8C3866A (8CP38661HB)	3617013	611615839	CML-R	COMP	3	0	
STRESS: STATIC LATCH-UP (85C, 140mA)							
CY8C3866A (8CP38661HB)	3617013	611615839	CML-R	COMP	3	0	
STRESS: STATIC LATCH-UP (85C, 200mA)							
CY8C3866A (8CP38661HB)	3617013	611615839	CML-R	COMP	3	0	
STRESS: STATIC LATCH-UP (85C, 300mA)							
CY8C3866A (8CP38661HB)	3617013	611615839	CML-R	COMP	3	0	
STRESS: TC COND. C -65C TO 150C, PRE COND 192 HRS 30C/60%RH (MSL3)							
CY8C3866A (8CP38661HB)	3617013	611615839	CML-R	500	80	0	

Reliability Test Data

QTP #: 160702

Device	Fab Lot #	Assy Lot #	Assy Loc	Duration	Samp	Rej	Failure Mechanism
STRESS: ACOUSTIC, MSL3							
CY8C4248 (8CP42003CB)	3621015	611619413	ASE-G	COMP	15	0	
CY8C4246 (8CP480001BB)	4542101	611535695	CML-RA	COMP	15	0	
STRESS: DATA RETENTION, PLASTIC, 175C							
CY8C4248 (8CP42003CB)	3621015	611619413	ASE-G	76	80	0	
CY8C4248 (8CP42003CB)	3621015	611619413	ASE-G	152	80	0	
STRESS: HIGH TEMP DYNAMIC OPERATING LIFE-EARLY FAILURE RATE (150C, 2.07V, Vcc Max)							
CY8C4248 (8CP42003CB)	3621015	611619413	ASE-G	48	1521	0	
CY8C4246 (8CP480001BB)	4542101	611535695	CML-RA	48	1532	0	
STRESS: ENDURANCE							
CY8C4248 (8CP42003CB)	3621015	611619413	ASE-G	Cycling	80	0	
CY8C4248 (8CP42003CB)	3621015	611619413	ASE-G	168	80	0	
STRESS: ESD-CHARGE DEVICE MODEL							
CY8C4248 (8CP42003CB)	3621015	611619413	ASE-G	500	9	0	
CY8C4248 (8CP42003CB)	3621015	611619413	ASE-G	750	3	0	
CY8C4248 (8CP42003CB)	3621015	611619413	ASE-G	1000	3	0	
CY8C4248 (8CP42003CB)	3621015	611619413	ASE-G	1250	3	0	
CY8C4248 (8CP42003CB)	3621015	611619413	ASE-G	1500	3	0	
CY8C4248 (8CP42003CB)	3621015	611619413	ASE-G	1750	3	0	
CY8C4248 (8CP42003CB)	3621015	611619413	ASE-G	2000	3	0	
CY8C4248 (8CP42005CB)	3621015	611619414	ASE-G	500	9	0	
CY8C4248 (8CP42005CB)	3621015	611619414	ASE-G	750	3	0	
CY8C4248 (8CP42005CB)	3621015	611619414	ASE-G	1000	3	0	
CY8C4248 (8CP42005CB)	3621015	611619414	ASE-G	1250	3	0	
CY8C4248 (8CP42005CB)	3621015	611619414	ASE-G	1500	3	0	
CY8C4248 (8CP42005CB)	3621015	611619414	ASE-G	1750	3	0	
CY8C4248 (8CP42005CB)	3621015	611619414	ASE-G	2000	3	0	
STRESS: ESD-HUMAN BODY MODEL PER JESD22, METHOD A114							
CY8C4248 (8CP42003CB)	3621015	611619413	ASE-G	1100	3	0	
CY8C4248 (8CP42003CB)	3621015	611619413	ASE-G	2200	8	0	
CY8C4248 (8CP42003CB)	3621015	611619413	ASE-G	3300	3	0	
CY8C4248 (8CP42003CB)	3621015	611619413	ASE-G	4000	3	0	
STRESS: HI-ACCEL SATURATION TEST (130C, 85%RH, 5.5V), PRE COND 192 HR 30C/60%RH (MSL3)							
CY8C4248 (8CP42003CB)	3621015	611619413	ASE-G	96	30	0	
STRESS: HIGH TEMP DYNAMIC OPERATING LIFE-LATENT FAILURE RATE (150C, 2.07V, Vcc Max)							
CY8C4246 (8CP480001BB)	4542101	611535695	CML-RA	80	80	0	
CY8C4246 (8CP480001BB)	4542101	611535695	CML-RA	500	80	0	

Reliability Test Data

QTP #: 160702

Device	Fab Lot #	Assy Lot #	Assy Loc	Duration	Samp	Rej	Failure Mechanism
STRESS: PRESSURE COOKER TEST (121C, 100%RH), 15 Psig, PRE COND 192 HR 30C/60%RH (MSL3)							
CY8C4248 (8CP42003CB)	3621015	611619413	ASE-G	168	80	0	
STRESS: STATIC LATCH-UP (125C, 100mA)							
CY8C4248 (8CP42003CB)	3621015	611619413	ASE-G	COMP	3	0	
STRESS: STATIC LATCH-UP (125C, 140mA)							
CY8C4248 (8CP42003CB)	3621015	611619413	ASE-G	COMP	3	0	
STRESS: STATIC LATCH-UP (85C, 140mA)							
CY8C4248 (8CP42003CB)	3621015	611619413	ASE-G	COMP	3	0	
STRESS: STATIC LATCH-UP (85C, 200mA)							
CY8C4248 (8CP42003CB)	3621015	611619413	ASE-G	COMP	3	0	
STRESS: STATIC LATCH-UP (85C, 300mA)							
CY8C4248 (8CP42003CB)	3621015	611619413	ASE-G	COMP	3	0	
STRESS: TC COND. C -65C TO 150C, PRE COND 192 HRS 30C/60%RH (MSL3)							
CY8C4248 (8CP42003CB)	3621015	611619413	ASE-G	500	80	0	
CY8C4246 (8CP480001BB)	4542101	611535695	CML-RA	500	80	0	
CY8C4246 (8CP480001BB)	4542101	611535695	CML-RA	1000	80	0	

Reliability Test Data

QTP #: 160701

Device	Fab Lot #	Assy Lot #	Assy Loc	Duration	Samp	Rej	Failure Mechanism
STRESS: ACOUSTIC, MSL3							
CY8C4248 (8CP42003CB)	3631019	611627888	ASE-G	COMP	15	0	
CY8C4248 (8CP42003DB)	3649066	611701516	ASE-G	COMP	15	0	
CY8C4248 (8CP42003DB)	3649067	611701515	ASE-G	COMP	15	0	
STRESS: DATA RETENTION, PLASTIC, 150C							
CY8C4248 (8CP42003CB)	3631019	611627888	ASE-G	500	80	0	
CY8C4248 (8CP42003CB)	3631019	611627888	ASE-G	1000	80	0	
STRESS: DATA RETENTION, PLASTIC, 175C							
CY8C4248 (8CP42003CB)	3631019	611627888	ASE-G	76	80	0	
CY8C4248 (8CP42003CB)	3631019	611627888	ASE-G	152	80	0	
STRESS: HIGH TEMP DYNAMIC OPERATING LIFE-EARLY FAILURE RATE (150C, 2.07V, Vcc Max)							
CY8C4248 (8CP42003CB)	3631019	611627888	ASE-G	48	1598	0	
CY8C4248 (8CP42003DB)	3649066	611701516	ASE-G	48	1550	0	
STRESS: ENDURANCE							
CY8C4248 (8CP42003CB)	3631019	611627888	ASE-G	Cycling	88	0	
CY8C4248 (8CP42003CB)	3631019	611627888	ASE-G	168	88	0	
CY8C4248 (8CP42003CB)	3631019	611627888	ASE-G	500	88	0	
STRESS: ESD-CHARGE DEVICE MODEL							
CY8C4248 (8CP42003CB)	3631019	611627888	ASE-G	500	9	0	
CY8C4248 (8CP42003CB)	3631019	611627888	ASE-G	750	3	0	
CY8C4248 (8CP42003CB)	3631019	611627888	ASE-G	1000	3	0	
CY8C4248 (8CP42003CB)	3631019	611627888	ASE-G	1250	3	0	
CY8C4248 (8CP42003CB)	3631019	611627888	ASE-G	1500	3	0	
CY8C4248 (8CP42003CB)	3631019	611627888	ASE-G	1750	3	0	
CY8C4248 (8CP42003CB)	3631019	611627888	ASE-G	2000	3	0	
STRESS: ESD-HUMAN BODY MODEL PER JESD22, METHOD A114							
CY8C4248 (8CP42003CB)	3631019	611627888	ASE-G	1000	3	0	
CY8C4248 (8CP42003CB)	3631019	611627888	ASE-G	2200	8	0	
CY8C4248 (8CP42003CB)	3631019	611627888	ASE-G	3300	3	0	
CY8C4248 (8CP42003CB)	3631019	611627888	ASE-G	4000	3	0	
CY8C4248 (8CP42003CB)	3631019	611627888	ASE-G	5000	3	0	
CY8C4248 (8CP42003CB)	3631019	611627888	ASE-G	6000	3	0	
CY8C4248 (8CP42003CB)	3631019	611627888	ASE-G	7000	3	0	
CY8C4248 (8CP42003CB)	3631019	611627888	ASE-G	8000	3	0	
STRESS: HI-ACCEL SATURATION TEST (130C, 85%RH, 5.5V), PRE COND 192 HR 30C/60%RH (MSL3)							
CY8C4248 (8CP42003CB)	3631019	611627888	ASE-G	96	25	0	
CY8C4248 (8CP42003CB)	3631019	611627888	ASE-G	192	25	0	

Reliability Test Data

QTP #: 160701

Device	Fab Lot #	Assy Lot #	Assy Loc	Duration	Samp	Rej	Failure Mechanism
STRESS: HIGH TEMP DYNAMIC OPERATING LIFE-LATENT FAILURE RATE (150C, 2.07V, Vcc Max)							
CY8C4248 (8CP42003CB)	3631019	611627888	ASE-G	80	80	0	
CY8C4248 (8CP42003CB)	3631019	611627888	ASE-G	500	80	0	
CY8C4248 (8CP42003DB)	3649066	611701516	ASE-G	500	80	0	
STRESS: PRESSURE COOKER TEST (121C, 100%RH), 15 Psig, PRE COND 192 HR 30C/60%RH (MSL3)							
CY8C4248 (8CP42003CB)	3631019	611627888	ASE-G	96	80	0	
CY8C4248 (8CP42003DB)	3649066	611701516	ASE-G	168	80	0	
STRESS: PRE/POST LFR PARAMETER ASSESSMENT							
CY8C4248 (8CP42003CB)	3631019	611627888	ASE-G	COMP	12	0	
STRESS: STATIC LATCH-UP (125C, 100mA)							
CY8C4248 (8CP42003CB)	3631019	611627888	ASE-G	COMP	3	0	
STRESS: STATIC LATCH-UP (125C, 140mA)							
CY8C4248 (8CP42003CB)	3631019	611627888	ASE-G	COMP	3	0	
STRESS: STATIC LATCH-UP (85C, 140mA)							
CY8C4248 (8CP42003CB)	3631019	611627888	ASE-G	COMP	3	0	
STRESS: STATIC LATCH-UP (85C, 200mA)							
CY8C4248 (8CP42003CB)	3631019	611627888	ASE-G	COMP	3	0	
STRESS: STATIC LATCH-UP (85C, 300mA)							
CY8C4248 (8CP42003CB)	3631019	611627888	ASE-G	COMP	3	0	
STRESS: TC COND. C -65C TO 150C, PRE COND 192 HRS 30C/60%RH (MSL3)							
CY8C4248 (8CP42003CB)	3631019	611627888	ASE-G	500	80	0	
CY8C4248 (8CP42003CB)	3631019	611627888	ASE-G	1000	80	0	
CY8C4248 (8CP42003DB)	3649066	611701516	ASE-G	500	80	0	
CY8C4248 (8CP42003DB)	3649066	611701516	ASE-G	1000	80	0	
CY8C4248 (8CP42003DB)	3649067	611701515	ASE-G	500	80	0	
CY8C4248 (8CP42003DB)	3649067	611701515	ASE-G	1000	80	0	

Reliability Test Data

QTP #: 172307

Device	Fab Lot #	Assy Lot #	Assy Loc	Duration	Samp	Rej	Failure Mechanism
STRESS: HIGH TEMP DYNAMIC OPERATING LIFE-EARLY FAILURE RATE (150C, 1.2V, Vcc Max)							
CY8C4248 (8CP42003DB)	3721130	611724119	ASE-G	48	1196	0	
CY8C4248 (8CP42003DB)	3721130	611729092	ASE-G	48	1200	0	
STRESS: ESD-CHARGE DEVICE MODEL							
CY8C4248 (8CP42003DB)	3721130	611724119	ASE-G	500	9	0	
CY8C4248 (8CP42003DB)	3721130	611724119	ASE-G	1000	3	0	
CY8C4248 (8CP42003DB)	3721130	611724119	ASE-G	1250	3	0	
CY8C4248 (8CP42005DB)	3726090	611732045	ASE-G	500	9	0	
CY8C4248 (8CP42005DB)	3726090	611732045	ASE-G	1000	3	0	
CY8C4248 (8CP42005DB)	3726090	611732045	ASE-G	1250	3	0	
STRESS: ESD-HUMAN BODY MODEL PER JESD22, METHOD A114							
CY8C4248 (8CP42003DB)	3721130	611724119	ASE-G	1100	3	0	
CY8C4248 (8CP42003DB)	3721130	611724119	ASE-G	2200	8	0	
CY8C4248 (8CP42003DB)	3721130	611724119	ASE-G	3300	3	0	
STRESS: HI-ACCEL SATURATION TEST (130C, 85%RH, 5.5V), PRE COND 192 HR 30C/60%RH (MSL3)							
CY8C4248 (8CP42003DB)	3721130	611724119	ASE-G	96	30	0	
STRESS: HIGH TEMP DYNAMIC OPERATING LIFE-LATENT FAILURE RATE (150C, 1.2V, Vcc Max)							
CY8C4248 (8CP42003DB)	3721130	611724119	ASE-G	500	80	0	
STRESS: PRESSURE COOKER TEST (121C, 100%RH), 15 Psig, PRE COND 192 HR 30C/60%RH (MSL3)							
CY8C4248 (8CP42003DB)	3721130	611724119	ASE-G	168	80	0	
STRESS: PRE/POST LFR PARAMETER ASSESSMENT							
CY8C4248 (8CP42003DB)	3721130	611724119	ASE-G	COMP	12	0	
STRESS: STATIC LATCH-UP (125C, 100mA)							
CY8C4248 (8CP42003DB)	3721130	611724119	ASE-G	COMP	3	0	
STRESS: STATIC LATCH-UP (125C, 140mA)							
CY8C4248 (8CP42003DB)	3721130	611724119	ASE-G	COMP	2	0	
STRESS: STATIC LATCH-UP (85C, 140mA)							
CY8C4248 (8CP42003DB)	3721130	611724119	ASE-G	COMP	2	0	
STRESS: STATIC LATCH-UP (85C, 200mA)							
CY8C4248 (8CP42003DB)	3721130	611724119	ASE-G	COMP	2	0	
STRESS: TC COND. C -65C TO 150C, PRE COND 192 HRS 30C/60%RH (MSL3)							
CY8C4248 (8CP42003DB)	3721130	611724119	ASE-G	COMP	80	0	
CY8C4248 (8CP42003DB)	3721130	611724119	ASE-G	COMP	78	0	

Reliability Test Data

QTP #: 173204

Device	Fab Lot #	Assy Lot #	Assy Loc	Duration	Samp	Rej	Failure Mechanism
STRESS: HIGH TEMP DYNAMIC OPERATING LIFE-EARLY FAILURE RATE (150C, 2.07V, Vcc Max)							
CY8C4147 (8CP43002AB)	3738085	611737095	ASE-G	48	537	0	
CY8C4147 (8CP43002AB)	3739025	611738647	ASE-G	48	1090	0	
STRESS: ESD-CHARGE DEVICE MODEL							
CY8C4147 (8CP43002AB)	3738085	611737095	ASE-G	500	9	0	
CY8C4147 (8CP43002AB)	3738085	611737095	ASE-G	1000	3	0	
CY8C4147 (8CP43002AB)	3738085	611737095	ASE-G	1250	3	0	
STRESS: ESD-HUMAN BODY MODEL PER JESD22, METHOD A114							
CY8C4147 (8CP43002AB)	3738085	611737095	ASE-G	1100	3	0	
CY8C4147 (8CP43002AB)	3738085	611737095	ASE-G	2200	8	0	
CY8C4147 (8CP43002AB)	3738085	611737095	ASE-G	3300	3	0	
STRESS: STATIC LATCH-UP (125C, 100mA)							
CY8C4147 (8CP43002AB)	3738085	611737095	ASE-G	1100	3	0	
STRESS: STATIC LATCH-UP (125C, 140mA)							
CY8C4147 (8CP43002AB)	3738085	611737095	ASE-G	1100	3	0	
STRESS: STATIC LATCH-UP (85C, 140mA)							
CY8C4147 (8CP43002AB)	3738085	611737095	ASE-G	1100	3	0	
STRESS: STATIC LATCH-UP (85C, 200mA)							
CY8C4147 (8CP43002AB)	3738085	611737095	ASE-G	1100	3	0	

Reliability Test Data

QTP #: 175110

Device	Fab Lot #	Assy Lot #	Assy Loc	Duration	Samp	Rej	Failure Mechanism
STRESS: ACOUSTIC, MSL3							
CY8CMBR31167 (8CP44334)	3817045	611814628	CML-RA	COMP	22	0	
STRESS: DATA RETENTION, PLASTIC, 175C							
CY8CMBR31167 (8CP44334)	3817045	611814628	CML-RA	76	79	0	
CY8CMBR31167 (8CP44334)	3817045	611814628	CML-RA	152	79	0	
STRESS: ENDURANCE							
CY8C4014LQI7 (8CP44333C)	3817045	611815693	ASE-G	Cycling	80	0	
CY8C4014LQI7 (8CP44333C)	3817045	611815693	ASE-G	168	80	0	
STRESS: HIGH TEMP DYNAMIC OPERATING LIFE-EARLY FAILURE RATE (150C, 2.07V, Vcc Max)							
CY8C4014LQI7 (8CP44333C)	3817045	611815693	CML-RA	48	1548	0	
STRESS: ESD-CHARGE DEVICE MODEL (500V)							
CY8CMBR31167 (8CP44334)	3817045	611814628	CML-RA	500	9	0	
CY8C4014LQI7 (8CP44333C)	3817045	611815693	ASE-G	500	9	0	
CY8C4014SXI7 (8C44332CB)	3817045	611817296	CML-RA	500	9	0	
CY8C4014SXI7 (8C44331CB)	3817045	611817297	CML-RA	500	9	0	
CY8C4014PVI7 (8CP44335C)	3817045	611814629	CML-RA	500	9	0	
STRESS: ESD-CHARGE DEVICE MODEL (750V)							
CY8CMBR31167 (8CP44334)	3817045	611814628	CML-RA	750	3	0	
CY8C4014LQI7 (8CP44333C)	3817045	611815693	ASE-G	750	3	0	
CY8C4014SXI7 (8C44332CB)	3817045	611817296	CML-RA	750	3	0	
CY8C4014SXI7 (8C44331CB)	3817045	611817297	CML-RA	750	3	0	
CY8C4014PVI7 (8CP44335C)	3817045	611814629	CML-RA	750	3	0	
STRESS: ESD-CHARGE DEVICE MODEL (1000V)							
CY8CMBR31167 (8CP44334)	3817045	611814628	CML-RA	1000	3	0	
CY8C4014LQI7 (8CP44333C)	3817045	611815693	ASE-G	1000	3	0	
CY8C4014SXI7 (8C44332CB)	3817045	611817296	CML-RA	1000	3	0	
CY8C4014SXI7 (8C44331CB)	3817045	611817297	CML-RA	1000	3	0	
CY8C4014PVI7 (8CP44335C)	3817045	611814629	CML-RA	1000	3	0	
STRESS: ESD-CHARGE DEVICE MODEL (1250V)							
CY8CMBR31167 (8CP44334)	3817045	611814628	CML-RA	1250	3	0	
CY8C4014LQI7 (8CP44333C)	3817045	611815693	ASE-G	1250	3	0	
CY8C4014SXI7 (8C44332CB)	3817045	611817296	CML-RA	1250	3	0	
CY8C4014SXI7 (8C44331CB)	3817045	611817297	CML-RA	1250	3	0	
CY8C4014PVI7 (8CP44335C)	3817045	611814629	CML-RA	1250	3	0	

Reliability Test Data

QTP #: 175110

Device	Fab Lot #	Assy Lot #	Assy Loc	Duration	Samp	Rej	Failure Mechanism
STRESS: ESD-CHARGE DEVICE MODEL (1500V)							
CY8CMBR31167 (8CP44334)	3817045	611814628	CML-RA	1500	3	0	
CY8C4014LQI7 (8CP44333C)	3817045	611815693	ASE-G	1500	3	0	
CY8C4014SXI7 (8C44332CB)	3817045	611817296	CML-RA	1500	3	0	
CY8C4014SXI7 (8C44331CB)	3817045	611817297	CML-RA	1500	3	0	
CY8C4014PVI7 (8CP44335C)	3817045	611814629	CML-RA	1500	3	0	
STRESS: ESD-CHARGE DEVICE MODEL (1750V)							
CY8CMBR31167 (8CP44334)	3817045	611814628	CML-RA	1750	3	0	
CY8C4014LQI7 (8CP44333C)	3817045	611815693	ASE-G	1750	3	0	
CY8C4014SXI7 (8C44332CB)	3817045	611817296	CML-RA	1750	3	0	
CY8C4014SXI7 (8C44331CB)	3817045	611817297	CML-RA	1750	3	0	
CY8C4014PVI7 (8CP44335C)	3817045	611814629	CML-RA	1750	3	0	
STRESS: ESD-CHARGE DEVICE MODEL (2000V)							
CY8CMBR31167 (8CP44334)	3817045	611814628	CML-RA	2000	3	0	
CY8C4014LQI7 (8CP44333C)	3817045	611815693	ASE-G	2000	3	0	
CY8C4014SXI7 (8C44332CB)	3817045	611817296	CML-RA	2000	3	0	
CY8C4014SXI7 (8C44331CB)	3817045	611817297	CML-RA	2000	3	0	
CY8C4014PVI7 (8CP44335C)	3817045	611814629	CML-RA	2000	3	0	
STRESS: ESD-HUMAN BODY MODEL PER JESD22, METHOD A114							
CY8CMBR31167 (8CP44334)	3817045	611814628	CML-RA	1100	3	0	
CY8C4014LQI7 (8CP44333C)	3817045	611815693	ASE-G	1100	3	0	
CY8CMBR31167 (8CP44334)	3817045	611814628	CML-RA	2200	8	0	
CY8C4014LQI7 (8CP44333C)	3817045	611815693	ASE-G	2200	3	0	
CY8CMBR31167 (8CP44334)	3817045	611814628	CML-RA	3300	3	0	
CY8C4014LQI7 (8CP44333C)	3817045	611815693	ASE-G	3300	3	0	
CY8CMBR31167 (8CP44334)	3817045	611814628	CML-RA	4000	3	0	
CY8C4014LQI7 (8CP44333C)	3817045	611815693	ASE-G	4000	3	0	
CY8CMBR31167 (8CP44334)	3817045	611814628	CML-RA	5000	3	0	
CY8C4014LQI7 (8CP44333C)	3817045	611815693	ASE-G	5000	3	0	
CY8CMBR31167 (8CP44334)	3817045	611814628	CML-RA	6000	3	0	
CY8C4014LQI7 (8CP44333C)	3817045	611815693	ASE-G	6000	3	0	
CY8CMBR31167 (8CP44334)	3817045	611814628	CML-RA	7000	3	0	
STRESS: HIGH TEMP DYNAMIC OPERATING LIFE-LATENT FAILURE RATE (150C, 2.07V, Vcc Max)							
CY8C4014LQI7 (8CP44333C)	3817045	611815693	ASE-G	500	80	0	
STRESS: PRESSURE COOKER TEST (121C, 100%RH), 15 Psig, PRE COND 192 HR 30C/60%RH (MSL3)							
CY8CMBR31167 (8CP44334)	3817045	611814628	CML-RA	96	79	0	
CY8CMBR31167 (8CP44334)	3817045	611814628	CML-RA	168	79	0	
CY8CMBR31167 (8CP44334)	3817045	611814628	CML-RA	288	79	0	

Reliability Test Data

QTP #: 175110

Device	Fab Lot #	Assy Lot #	Assy Loc	Duration	Samp	Rej	Failure Mechanism
STRESS: PRE/POST LFR PARAMETER ASSESSMENT							
CY8C4014LQI7 (8CP44333C)	3817045	611815693	ASEK-G	COMP	10+2S	0	
STRESS: STATIC LATCH-UP (125C, 100mA)							
CY8CMBR31167 (8CP44334)	3817045	611814628	CML-RA	COMP	3	0	
CY8C4014LQI7 (8CP44333C)	3817045	611815693	ASEK-G	COMP	3	0	
STRESS: STATIC LATCH-UP (125C, 140mA)							
CY8CMBR31167 (8CP44334)	3817045	611814628	CML-RA	COMP	3	0	
CY8C4014LQI7 (8CP44333C)	3817045	611815693	ASEK-G	COMP	3	0	
STRESS: STATIC LATCH-UP (85C, 140mA)							
CY8CMBR31167 (8CP44334)	3817045	611814628	CML-RA	COMP	3	0	
CY8C4014LQI7 (8CP44333C)	3817045	611815693	ASEK-G	COMP	3	0	
STRESS: STATIC LATCH-UP (85C, 200mA)							
CY8CMBR31167 (8CP44334)	3817045	611814628	CML-RA	COMP	3	0	
CY8C4014LQI7 (8CP44333C)	3817045	611815693	ASEK-G	COMP	3	0	
STRESS: STATIC LATCH-UP (85C, 300mA)							
CY8CMBR31167 (8CP44334)	3817045	611814628	CML-RA	COMP	3	0	
CY8C4014LQI7 (8CP44333C)	3817045	611815693	ASEK-G	COMP	3	0	
STRESS: TC COND. C -65C TO 150C, PRE COND 192 HRS 30C/60%RH (MSL3)							
CY8CMBR31167 (8CP44334)	3817045	611814628	CML-RA	500	80	0	
CY8CMBR31167 (8CP44334)	3817045	611814628	CML-RA	1000	80	0	

Reliability Test Data

QTP #: 155101

Device	Fab Lot #	Assy Lot #	Assy Loc	Duration	Samp	Rej	Failure Mechanism
STRESS: ACOUSTIC, MSL3							
CY8C4A45 (8CP490001AB)	4606352	611606660	CML-RA	COMP	15	0	
CY8C4A45 (8CP490001BB)	3808091	611806473	CML-RA	COMP	15	0	
STRESS: HIGH TEMP DYNAMIC OPERATING LIFE-EARLY FAILURE RATE (150C, 2.07V, Vcc Max)							
CY8C4A45 (8CP490001AB)	4609503	611607299	CML-RA	48	1546	0	
CY8C4A45 (8CP490001AB)	4609503	611611234	CML-RA	48	1501	0	
CY8C4A45 (8CP491001CB)	3826092	611823253	CML-RA	48	1546	0	
STRESS: ESD-CHARGE DEVICE MODEL (500V)							
CY8C4A45 (8CP490001AB)	4606352	611606660	CML-RA	COMP	9	0	
CY8C4A45 (8CP490001AB)	4606352	611604906	CML-RA	COMP	9	0	
CY8C4A45 (8CP490002AB)	4606352	611605323	OSE-T	COMP	9	0	
CY8C4A45 (8CP490003BB)	3808091	611809812	CML-RA	COMP	9	0	
CY8C4A45 (8CP490002BB)	611810224	611810224	CML-RA	COMP	9	0	
CY8C4A45 (8CP491001CB)	3826092	611823253	CML-RA	COMP	9	0	
STRESS: ESD-CHARGE DEVICE MODEL (750V)							
CY8C4A45 (8CP490001AB)	4606352	611606660	CML-RA	COMP	3	0	
CY8C4A45 (8CP490001AB)	4606352	611604906	CML-RA	COMP	3	0	
CY8C4A45 (8CP490002AB)	4606352	611605323	OSE-T	COMP	3	0	
CY8C4A45 (8CP490003BB)	3808091	611809812	CML-RA	COMP	3	0	
CY8C4A45 (8CP490002BB)	611810224	611810224	CML-RA	COMP	3	0	
CY8C4A45 (8CP491001CB)	3826092	611823253	CML-RA	COMP	3	0	
STRESS: ESD-CHARGE DEVICE MODEL (1000V)							
CY8C4A45 (8CP490001AB)	4606352	611606660	CML-RA	COMP	3	0	
CY8C4A45 (8CP490001AB)	4606352	611604906	CML-RA	COMP	3	0	
CY8C4A45 (8CP490002AB)	4606352	611605323	OSE-T	COMP	3	0	
CY8C4A45 (8CP490003BB)	3808091	611809812	CML-RA	COMP	3	0	
CY8C4A45 (8CP490002BB)	611810224	611810224	CML-RA	COMP	3	0	
CY8C4A45 (8CP491001CB)	3826092	611823253	CML-RA	COMP	3	0	
STRESS: ESD-CHARGE DEVICE MODEL (1250V)							
CY8C4A45 (8CP490001AB)	4606352	611606660	CML-RA	COMP	3	0	
CY8C4A45 (8CP490001AB)	4606352	611604906	CML-RA	COMP	3	0	
CY8C4A45 (8CP490002AB)	4606352	611605323	OSE-T	COMP	3	0	

Reliability Test Data

QTP #: 155101

Device	Fab Lot #	Assy Lot #	Assy Loc	Duration	Samp	Rej	Failure Mechanism
STRESS: ESD-CHARGE DEVICE MODEL (1500V)							
CY8C4A45 (8CP490001AB)	4606352	611606660	CML-RA	COMP	3	0	
CY8C4A45 (8CP490001AB)	4606352	611604906	CML-RA	COMP	3	0	
CY8C4A45 (8CP490002AB)	4606352	611605323	OSE-T	COMP	3	0	
STRESS: ESD-CHARGE DEVICE MODEL (1750V)							
CY8C4A45 (8CP490001AB)	4606352	611606660	CML-RA	COMP	3	0	
CY8C4A45 (8CP490001AB)	4606352	611604906	CML-RA	COMP	3	0	
CY8C4A45 (8CP490002AB)	4606352	611605323	OSE-T	COMP	3	0	
STRESS: ESD-CHARGE DEVICE MODEL (2000V)							
CY8C4A45 (8CP490001AB)	4606352	611604906	CML-RA	COMP	3	0	
CY8C4A45 (8CP490002AB)	4606352	611605323	OSE-T	COMP	3	0	
STRESS: ESD-HUMAN BODY MODEL PER JESD22, METHOD A114							
CY8C4A45 (8CP490001AB)	4606352	611606660	CML-RA	1100	3	0	
CY8C4A45 (8CP491001CB)	3826092	611823253	CML-RA	1100	3	0	
CY8C4A45 (8CP490001AB)	4606352	611606660	CML-RA	2200	3	0	
CY8C4A45 (8CP491001CB)	3826092	611823253	CML-RA	2200	8	0	
CY8C4A45 (8CP490001AB)	4606352	611606660	CML-RA	3300	3	0	
CY8C4A45 (8CP490001AB)	4606352	611606660	CML-RA	4000	3	0	
CY8C4A45 (8CP490001AB)	4606352	611606660	CML-RA	5000	3	0	
STRESS: HIGH TEMPERATURE STORAGE							
CY8C4A45 (8CP490001BB)	3808091	611806473	CML-RA	500	50	0	
CY8C4A45 (8CP490001BB)	3808091	611806473	CML-RA	1000	50	0	
STRESS: HIGH TEMP DYNAMIC OPERATING LIFE-LATENT FAILURE RATE (150C, 2.07V, Vcc Max)							
CY8C4A45 (8CP490001AB)	4606352	611606660	CML-RA	80	119	0	
CY8C4A45 (8CP490001AB)	4606352	611606660	CML-RA	500	119	0	
CY8C4A45 (8CP490001BB)	3808091	611806473	CML-RA	80	119	0	
CY8C4A45 (8CP490001BB)	3808091	611806473	CML-RA	500	119	0	
STRESS: PRESSURE COOKER TEST (121C, 100%RH), 15 Psig, PRE COND 192 HR 30C/60%RH (MSL3)							
CY8C4A45 (8CP490001BB)	3808091	611806473	CML-RA	168	80	0	
CY8C4A45 (8CP490001BB)	3808091	611806473	CML-RA	288	80	0	
CY8C4A45 (8CP490001AB)	3648014	611644379	CML-RA	96	80	0	
CY8C4A45 (8CP490001AB)	3648014	611644379	CML-RA	168	80	0	
STRESS: PRE/POST LFR PARAMETER ASSESSMENT							
CY8C4A45 (8CP490001AB)	4606352	611606660	CML-RA	COMP	10+2	0	
CY8C4A45 (8CP490001BB)	3808091	611806473	CML-RA	COMP	10+2	0	

Reliability Test Data

QTP #: 155101

Device	Fab Lot #	Assy Lot #	Assy Loc	Duration	Samp	Rej	Failure Mechanism
STRESS: STATIC LATCH-UP (125C, 100mA)							
CY8C4A45 (8CP490001AB)	4606352	611606660	CML-RA	COMP	3	0	
CY8C4A45 (8CP491001CB)	3826092	611823253	CML-RA	COMP	3	0	
STRESS: STATIC LATCH-UP (125C, 140mA)							
CY8C4A45 (8CP490001AB)	4606352	611606660	CML-RA	COMP	3	0	
CY8C4A45 (8CP491001CB)	3826092	611823253	CML-RA	COMP	2	0	
STRESS: STATIC LATCH-UP (85C, 140mA)							
CY8C4A45 (8CP490001AB)	4606352	611606660	CML-RA	COMP	3	0	
CY8C4A45 (8CP491001CB)	3826092	611823253	CML-RA	COMP	2	0	
STRESS: STATIC LATCH-UP (85C, 200mA)							
CY8C4A45 (8CP490001AB)	4606352	611606660	CML-RA	COMP	3	0	
CY8C4A45 (8CP491001CB)	3826092	611823253	CML-RA	COMP	2	0	
STRESS: TC COND. C -65C TO 150C, PRE COND 192 HRS 30C/60%RH (MSL3)							
CY8C4A45 (8CP490001AB)	4606352	611606660	CML-RA	500	80	0	
CY8C4A45 (8CP490001AB)	4606352	611606660	CML-RA	1000	80	0	
CY8C4A45 (8CP490001BB)	3808091	611806473	CML-RA	500	80	0	
CY8C4A45 (8CP490001BB)	3808091	611806473	CML-RA	1000	80	0	

Reliability Test Data

QTP #: 171802

Device	Fab Lot #	Assy Lot #	Assy Loc	Duration	Samp	Rej	Failure Mechanism
STRESS: ACOUSTIC, MSL3							
CY8C4245AXI7(8CP44202EB)	3820077	611822911	ASE-G	COMP	22	0	
STRESS: BALL SHEAR							
CY8C4245AXI7(8CP44202EB)	3820077	611822911	ASE-G	COMP	5	0	
STRESS: BOND PULL							
CY8C4245AXI7(8CP44202EB)	3820077	611822911	ASE-G	COMP	5	0	
STRESS: DIE SHEAR							
CY8C4245AXI7(8CP44202EB)	3820077	611822911	ASE-G	COMP	15	0	
STRESS: DATA RETENTION, PLASTIC, 175C							
CY8C4245AXI7(8CP44202EB)	3820077	611822911	ASE-G	76	77	0	
CY8C4245AXI7(8CP44202EB)	3820077	611822911	ASE-G	152	77	0	
STRESS: HIGH TEMP DYNAMIC OPERATING LIFE-EARLY FAILURE RATE (150C, 2.07V, Vcc Max)							
CY8C4245AXI7(8CP44202EB)	3820077	611822911	ASE-G	48	1552	0	
STRESS: ENDURANCE							
CY8C4245AXI7(8CP44202EB)	3820077	611822911	ASE-G	Cycling	80	0	
CY8C4245AXI7(8CP44202EB)	3820077	611822911	ASE-G	168	80	0	
STRESS: ESD-CHARGE DEVICE MODEL							
CY8C4245AXI7(8CP44202EB)	3820077	611822911	ASE-G	500	9	0	
CY8C4245AXI7(8CP44202EB)	3820077	611822911	ASE-G	750	3	0	
CY8C4245AXI7(8CP44202EB)	3820077	611822911	ASE-G	1000	3	0	
CY8C4245AXI7(8CP44202EB)	3820077	611822911	ASE-G	1250	3	0	
CY8C4245AXI7(8CP44202EB)	3820077	611822911	ASE-G	1500	3	0	
CY8C4245AXI7(8CP44202EB)	3820077	611822911	ASE-G	1750	3	0	
CY8C4245AXI7(8CP44202EB)	3820077	611822911	ASE-G	2000	3	0	
STRESS: ESD-HUMAN BODY MODEL PER JESD22, METHOD A114							
CY8C4245AXI7(8CP44202EB)	3820077	611822911	ASE-G	1100	3	0	
CY8C4245AXI7(8CP44202EB)	3820077	611822911	ASE-G	2200	8	0	
CY8C4245AXI7(8CP44202EB)	3820077	611822911	ASE-G	3300	3	0	
CY8C4245AXI7(8CP44202EB)	3820077	611822911	ASE-G	4000	3	0	
STRESS: HIGH TEMP DYNAMIC OPERATING LIFE-LATENT FAILURE RATE (150C, 2.07V, Vcc Max)							
CY8C4245AXI7(8CP44202EB)	3820077	611822911	ASE-G	500	85	0	
STRESS: PRESSURE COOKER TEST (121C, 100%RH), 15 Psig, PRE COND 192 HR 30C/60%RH (MSL3)							
CY8C4245AXI7(8CP44202EB)	3820077	611822911	ASE-G	96	77	0	
CY8C4245AXI7(8CP44202EB)	3820077	611822911	ASE-G	168	76	0	
STRESS: PHYSICAL DIMENSION							
CY8C4245AXI7(8CP44202EB)	3820077	611822911	ASE-G	COMP	30	0	
STRESS: STATIC LATCH-UP (125C, 100mA)							
CY8C4245AXI7(8CP44202EB)	3820077	611822911	ASE-G	COMP	3	0	

Reliability Test Data

QTP #: 171802

Device	Fab Lot #	Assy Lot #	Assy Loc	Duration	Samp	Rej	Failure Mechanism
STRESS: STATIC LATCH-UP (125C, 140mA)							
CY8C4245AXI7(8CP44202EB)	3820077	611822911	ASE-G	COMP	3	0	
STRESS: STATIC LATCH-UP (85C, 140mA)							
CY8C4245AXI7(8CP44202EB)	3820077	611822911	ASE-G	COMP	3	0	
STRESS: STATIC LATCH-UP (85C, 200mA)							
CY8C4245AXI7(8CP44202EB)	3820077	611822911	ASE-G	COMP	3	0	
STRESS: STATIC LATCH-UP (85C, 300mA)							
CY8C4245AXI7(8CP44202EB)	3820077	611822911	ASE-G	COMP	3	0	
STRESS: TC COND. C -65C TO 150C, PRE COND 192 HRS 30C/60%RH (MSL3)							
CY8C4245AXI7(8CP44202EB)	3820077	611822911	ASE-G	500	77	0	
CY8C4245AXI7(8CP44202EB)	3820077	611822911	ASE-G	1000	77	0	
STRESS: X-RAY							
CY8C4245AXI7(8CP44202EB)	3820077	611822911	ASE-G	COMP	15	0	

Reliability Test Data

QTP #: 190604

Device	Fab Lot #	Assy Lot #	Assy Loc	Duration	Samp	Rej	Failure Mechanism
STRESS: HIGH TEMP DYNAMIC OPERATING LIFE-EARLY FAILURE RATE (150C, 1.95V, Vcc Max)							
CY7C652157 (7CP68400B)	3903009	611903901	CML-RA	48	1550	0	
STRESS: ESD-CHARGE DEVICE MODEL							
CY7C652157 (7CP68400B)	3903009	611903901	CML-RA	500	9	0	
CY7C652157 (7CP68400B)	3903009	611903901	CML-RA	750	3	0	
CY7C652157 (7CP68400B)	3903009	611903901	CML-RA	1000	3	0	
STRESS: ESD-HUMAN BODY MODEL PER JESD22, METHOD A114							
CY7C652157 (7CP68400B)	3903009	611903901	CML-RA	1100	3	0	
CY7C652157 (7CP68400B)	3903009	611903901	CML-RA	2200	8	0	
CY7C652157 (7CP68400B)	3903009	611903901	CML-RA	3300	3	0	
STRESS: STATIC LATCH-UP (125C, 100mA)							
CY7C652157 (7CP68400B)	3903009	611903901	CML-RA	COMP	3	0	
STRESS: STATIC LATCH-UP (125C, 140mA)							
CY7C652157 (7CP68400B)	3903009	611903901	CML-RA	COMP	2	0	
STRESS: STATIC LATCH-UP (85C, 140mA)							
CY7C652157 (7CP68400B)	3903009	611903901	CML-RA	COMP	2	0	
STRESS: STATIC LATCH-UP (85C, 200mA)							
CY7C652157 (7CP68400B)	3903009	611903901	CML-RA	COMP	2	0	
STRESS: STATIC LATCH-UP (85C, 300mA)							
CY7C652157 (7CP68400B)	3903009	611903901	CML-RA	COMP	2	0	

Document History Page

Document Title: QTP# 190604: USB-Serial Bridge Controller Device Family, S8PF1-10P Technology, Fab 25 (Cu BEOL Interconnect)
Document Number: 002-27363

Rev.	ECN No.	Orig. of Change	Description of Change
**	6578915	JYF	Initial Spec Release

Affected parts
CY7C65210-24LTXI
CY7C65210-24LTXIT
CY7C65210A-24LTXI
CY7C65210A-24LTXIT
CY7C65211-24LTXI
CY7C65211-24LTXIT
CY7C65211A-24LTXI
CY7C65211A-24LTXIT
CY7C65213-28PVXI
CY7C65213-28PVXIT
CY7C65213-32LTXI
CY7C65213-32LTXIT
CY7C65213A-28PVXI
CY7C65213A-28PVXIT
CY7C65213A-32LTXI
CY7C65213A-32LTXIT
CY7C65215-32LTXI
CY7C65215-32LTXIT
CY7C65215A-32LTXI
CY7C65215A-32LTXIT
CY7C65217-24LTXI
CY7C65217-24LTXIT
CY7C65217A-24LTXI
CY7C65217A-24LTXIT
CY7C65221-24LTXI
CY7C65221-24LTXIT
CG8454AM
CG8454AMT
CP8151AT
CP8151ATT
CP8658AT
CP8658ATT
CP8666AT
CP8666ATT
CP8688BT
CP8688BTT
CP8788AT
CP8788ATT
CP8849AT
CP8849ATT
CP8923AT
CP8923ATT
CP8924AT
CP8924ATT
CP9101AT
CP9101ATT

CY7C652107-24LTXI
CY7C65210A7-24LTXI
CY7C652117-24LTXI
CY7C65211A7-24LTXI
CY7C652137-28PVXI
CY7C652137-28PVXIT
CY7C652137-32LTXI
CY7C65213A7-28PVXI
CY7C65213A7-28PVXIT
CY7C65213A7-32LTXI
CY7C652157-32LTXI
CY7C65215A7-32LTXI
CY7C652177-24LTXI
CY7C652177-24LTXIT
CY7C65217A7-24LTXI
CY7C65217A7-24LTXIT
CY7C652217-24LTXI
CY7C652217-24LTXIT
CG8454YM
CP8151YT
CP8658YT
CP8666YT
CP8688ZT
CP8788YT
CP8849YT
CP8923YT
CP8924YT
CP9101YT