Product Change Notification - SYST-12CGPY487

Date:

19 Dec 2019

Product Category:

Clock and Timing - Oscillators

Affected CPNs:

Notification subject:

Data Sheet - DSC1101 DSC1121 Data Sheet

Notification text:

SYST-12CGPY487

Microchip has released a new Product Documents for the DSC1101 DSC1121 Data Sheet of devices. If you are using one of these devices please read the document located at DSC1101 DSC1121 Data Sheet.

Notification Status: Final

Description of Change:

1) Corrected Input Logic Low value in DC Characteristics table.
2) Updated 6-Lead VDFN 2.5 mm x 2.0 mm Package Outline and Recommended Land Pattern Package Drawing.

Impacts to Data Sheet: None

Reason for Change: To Improve Manufacturability

Change Implementation Status: Complete

Date Document Changes Effective: 19 Dec 2019

NOTE: Please be advised that this is a change to the document only the product has not been changed.

Markings to Distinguish Revised from Unrevised Devices: N/A

Attachment(s):

DSC1101 DSC1121 Data Sheet

Please contact your local Microchip sales office with questions or concerns regarding this notification.

Terms and Conditions:

If you wish to receive Microchip PCNs via email please register for our PCN email service at our PCN home page select register then fill in the required fields. You will find instructions about registering for Microchips PCN email service in the PCN FAQ section.
If you wish to change your PCN profile, including opt out, please go to the PCN home page select login and sign into your myMicrochip account. Select a profile option from the left navigation bar and make the applicable selections.

DSC1101/21

Low-Jitter Precision CMOS Oscillator

Features

- Low RMS Phase Jitter: <1 ps (typ.)
- High Stability: ±10 ppm, ±20 ppm, ±25 ppm, ±50 ppm
- Wide Temperature Range:
  - Automotive: –55°C to +125°C
  - Ext. Industrial: –40°C to +105°C
  - Industrial: –40°C to +85°C
  - Commercial: –20°C to +70°C
- High Supply Noise Rejection: –50 dBc
- Wide Freq. Range: 2.3 MHz to 170 MHz
- Small Industry Standard Footprints
  - 2.5 mm x 2.0 mm, 3.2 mm x 2.5 mm, 5.0 mm x 3.2 mm, and 7.0 mm x 5.0 mm
- Excellent Shock and Vibration Immunity
  - Qualified to MIL-STD-883
- High Reliability
  - 20x Better MTF than Quartz Oscillators
- Low Current Consumption
- Supply Range of 2.25 to 3.6V
- Standby and Output Enable Function
- Lead-Free and RoHS Compliant

Applications

- Storage Area Networks
  - SATA, SAS, Fibre Channel
- Passive Optical Networks
  - EPON, 10G-EPON,V GPON, 10G-PON
- Ethernet
  - 1G, 10GBASE-T/KR/LR/SR, and FCoE
- HD/SD/SDI Video and Surveillance
- PCI Express
- Display Port

General Description

The DSC1101 and DSC1121 series of high performance oscillators utilize a proven silicon MEMS technology to provide excellent jitter and stability over a wide range of supply voltages and temperatures. By eliminating the need for quartz or SAW technology, MEMS oscillators significantly enhance reliability and accelerate product development, while meeting stringent clock performance criteria for a variety of communications, storage, and networking applications.

DSC1101 has a standby feature that allows it to completely power-down when EN pin is pulled low; whereas for DSC1121, only the outputs are disabled when EN is low. Both oscillators are available in industry standard packages, including the small 2.5 mm x 2.0 mm, and are “drop-in” replacements for standard 4-pin CMOS quartz crystal oscillators.

Functional Block Diagram

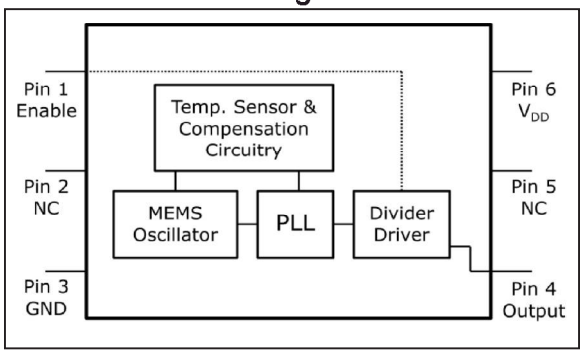

© 2017-2019 Microchip Technology Inc.

1.0 ELECTRICAL CHARACTERISTICS

Absolute Maximum Ratings †

Input Voltage, V_{IN} ..... –0.3V to V_{DD} + 0.3V
Supply Voltage ..... –0.3V to +4.0V
ESD Protection On All Pins ..... 4000V HBM, 1500V CDM (max.)

† Notice: Stresses above those listed under "Absolute Maximum Ratings" may cause permanent damage to the device. This is a stress rating only and functional operation of the device at those or any other conditions above those indicated in the operational sections of this specification is not intended. Exposure to maximum rating conditions for extended periods may affect device reliability.

Note: 1000+ years of data retention on internal memory.

DC CHARACTERISTICS

Electrical Characteristics						
Parameters	**Sym.**	**Min.**	**Typ.**	**Max.**	**Units**	**Conditions**
Supply Voltage (Note 1)	V_{DD}	2.25	—	3.6	V	—
Supply Current	I_{DD}	—	—	0.095	mA	DSC1101, EN pin low, output is disabled
		—	20	22		DSC1121, EN pin low, output is disabled
		—	31	35		Output enabled, C_L = 15 pF, F_0 = 100 MHz
Frequency Stability (Including frequency variations due to initial tolerance, temp. and power supply voltage.)	Δf	—	—	±10	ppm	Ext Comm. & Ind. only
				±20		All temp ranges
		—	—	±25		All temp ranges
		—	—	±50		All temp ranges
Aging	Δf	—	—	±5	ppm	1 year @ 25°C
Startup Time (Note 2)	t_{SU}	—	—	5	ms	T = 25°C
Input Logic Levels Input Logic High Input Logic Low	V_{IH}	0.75×V_{DD}	—	—	V	—
	V_{IL}	—	—	0.25×V_{DD}		
Output Disable Time (Note 3)	t_{DS}	—	—	5	ns	—
Output Enable Time	t_{EN}	—	—	5	ms	DSC1101
		—	—	20	ns	DSC1121
Enable Pull-up Resistor (Note 4)	—	—	40	—	kΩ	Pull-up Resistor Exist
CMOS Output						
Output Logic Levels Output Logic High Output Logic Low	V_{OH}	0.9×V_{DD}	—	—	V	I = ±6 mA
	V_{OL}	—	—	0.1×V_{DD}		

Note 1: Pin 6 V_{DD} should be filtered with 0.1 µF capacitor.
2: t_{SU} is time to 100 ppm of output frequency after V_{DD} is applied and outputs are enabled.
3: Output Waveform and Test Circuit figures define the parameters.
4: Output is enabled if pad is floated or not connected.

© 2017-2019 Microchip Technology Inc.

DC CHARACTERISTICS (CONTINUED)

Electrical Characteristics						
Parameters	**Sym.**	**Min.**	**Typ.**	**Max.**	**Units**	**Conditions**
Output Transition Time Rise Time Fall Time	t_R	—	1.1	2	ns	20% to 80% C_L = 15 pF
	t_F	—	1.3	2		
Frequency	f_0	2.3	—	170	MHz	C_L = 15 pF, –20°C to +70°C and –40°C to +85°C
		3.3	—	170		C_L = 15 pF, –40°C to +105°C and –55°C to +125°C
Output Duty Cycle	SYM	45	—	55	%	—
Period Jitter	J_{PER}	—	3	—	ps_{RMS}	F_{OUT} = 125 MHz
Integrated Phase Noise	J_{PH}	—	0.3	—	ps_{RMS}	200 kHz to 20 MHz @ 125 MHz
		—	0.38	—		100 kHz to 20 MHz @ 125 MHz
		—	1.7	2		12 kHz to 20 MHz @ 125 MHz

Note 1: Pin 6 V_{DD} should be filtered with 0.1 µF capacitor.

2: t_{SU} is time to 100 ppm of output frequency after V_{DD} is applied and outputs are enabled.

3: Output Waveform and Test Circuit figures define the parameters.

4: Output is enabled if pad is floated or not connected.

TEMPERATURE SPECIFICATIONS (Note 1)

Parameters	Sym.	Min.	Typ.	Max.	Units	Conditions
Temperature Ranges						
Operating Temperature Range (T)	T_A	–20	—	+70	°C	Ordering Option E
	T_A	–40	—	+85	°C	Ordering Option I
	T_A	–40	—	+105	°C	Ordering Option L
	T_A	–55	—	+125	°C	Ordering Option M
Junction Operating Temperature	T_J	—	—	+150	°C	—
Storage Temperature Range	T_A	–40	—	+150	°C	—
Soldering Temperature Range	T_S	—	—	+260	°C	40 sec. max

Note 1: The maximum allowable power dissipation is a function of ambient temperature, the maximum allowable junction temperature and the thermal resistance from junction to air (i.e., T_A, T_J, θ_{JA}). Exceeding the maximum allowable power dissipation will cause the device operating junction temperature to exceed the maximum +125°C rating. Sustained junction temperatures above +125°C can impact the device reliability.

© 2017-2019 Microchip Technology Inc.

2.0 NOMINAL PERFORMANCE CURVES

Note: The graphs and tables provided following this note are a statistical summary based on a limited number of samples and are provided for informational purposes only. The performance characteristics listed herein are not tested or guaranteed. In some graphs or tables, the data presented may be outside the specified operating range (e.g., outside specified power supply range) and therefore outside the warranted range.

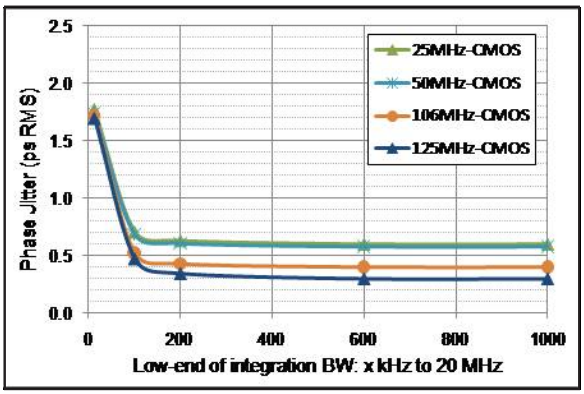

FIGURE 2-1: *Phase Jitter (Integrated Phase Noise).*

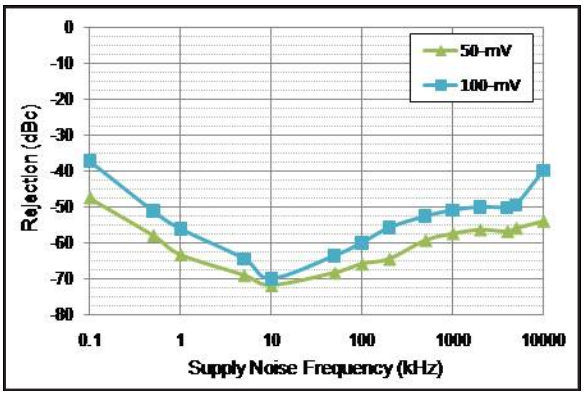

FIGURE 2-2: *Power Supply Rejection Ratio.*

3.0 PIN DESCRIPTIONS

The descriptions of the pins are listed in Table 3-1. Pin order and descriptions apply across all package types.

TABLE 3-1: PIN FUNCTION TABLE

Pin Number 7x5 w/ Pad	Pin Number 7x5 w/o Pad	Pin Number 5x3.2	Pin Number 3.2x2.5	Pin Number 2x2.5	Pin Name	Description
1	1	1	1	1	EN	Enable.
2	2	2	2	2	NC	Do not connect.
3	3	3	3	3	GND	Ground.
4	4	4	4	4	OUT	Output.
5	5	5	5	5	NC	Do not connect.
6	6	6	6	6	V_{DD}	Supply voltage.
PAD	—	—	—	—	PAD	Tie to ground.

TABLE 3-2: OUTPUT ENABLE MODES

EN Pin	DSC1101	DSC1121
High	Output Active	Output Active
NC	Output Active	Output Active
Low	Standby	Output Disabled

© 2017-2019 Microchip Technology Inc.

4.0 OUTPUT WAVEFORM

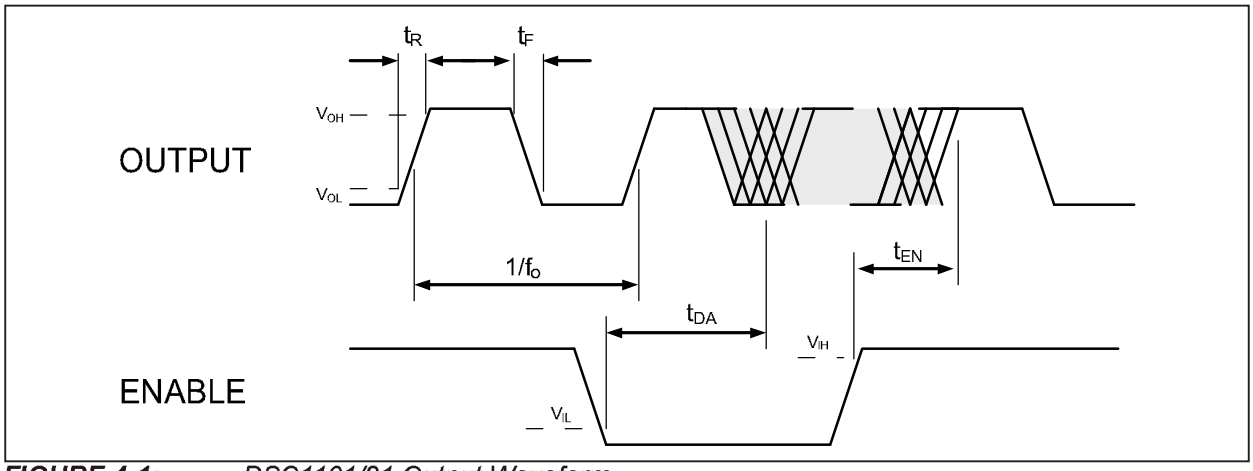

FIGURE 4-1: *DSC1101/21 Output Waveform.*

5.0 TYPICAL TERMINATION SCHEME

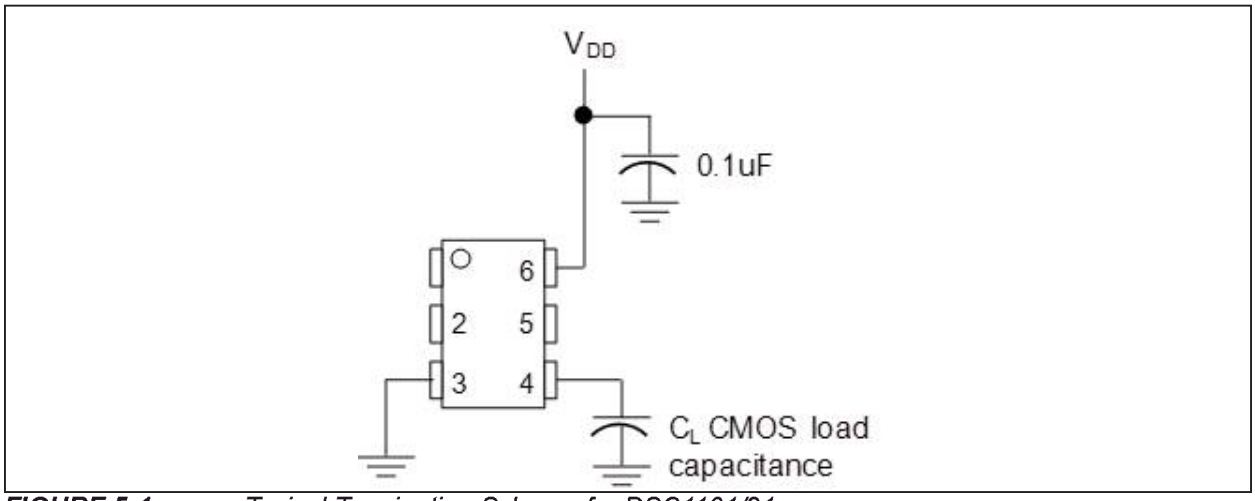

FIGURE 5-1: *Typical Termination Scheme for DSC1101/21.*

© 2017-2019 Microchip Technology Inc.

6.0 BOARD LAYOUT (RECOMMENDED)

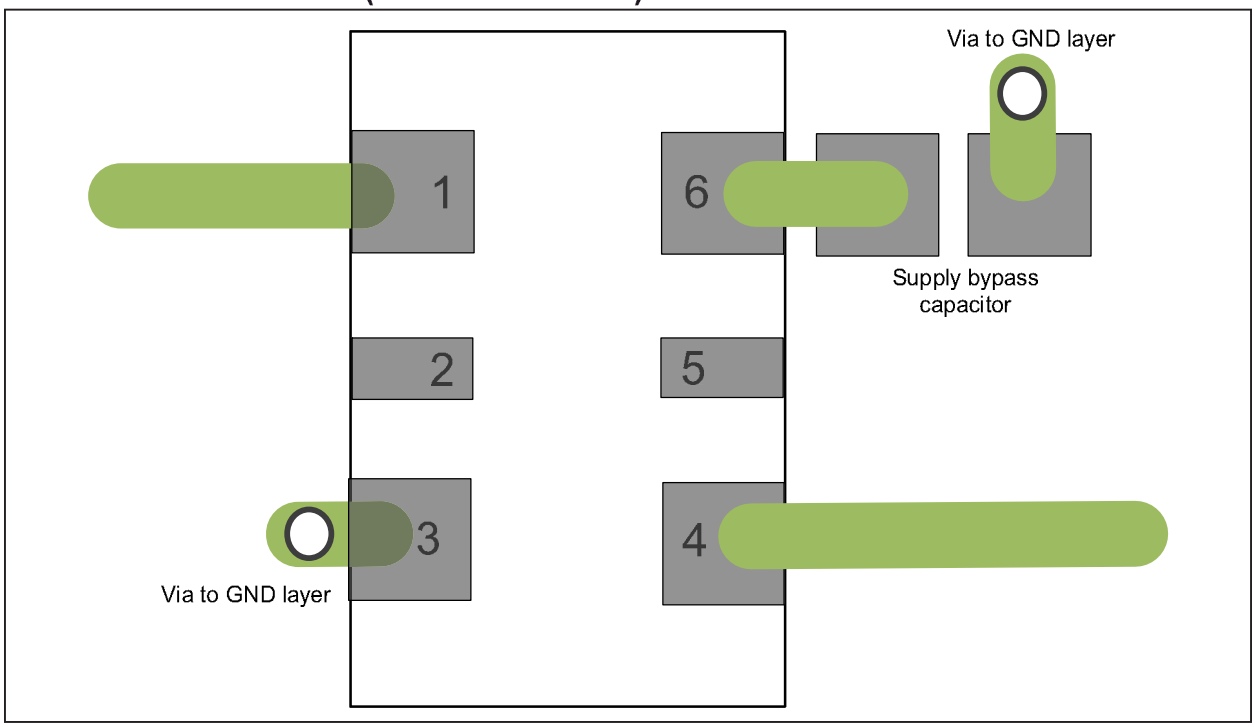

FIGURE 6-1: *DSC1101/21 Recommended Board Layout.*

7.0 SOLDER REFLOW PROFILE

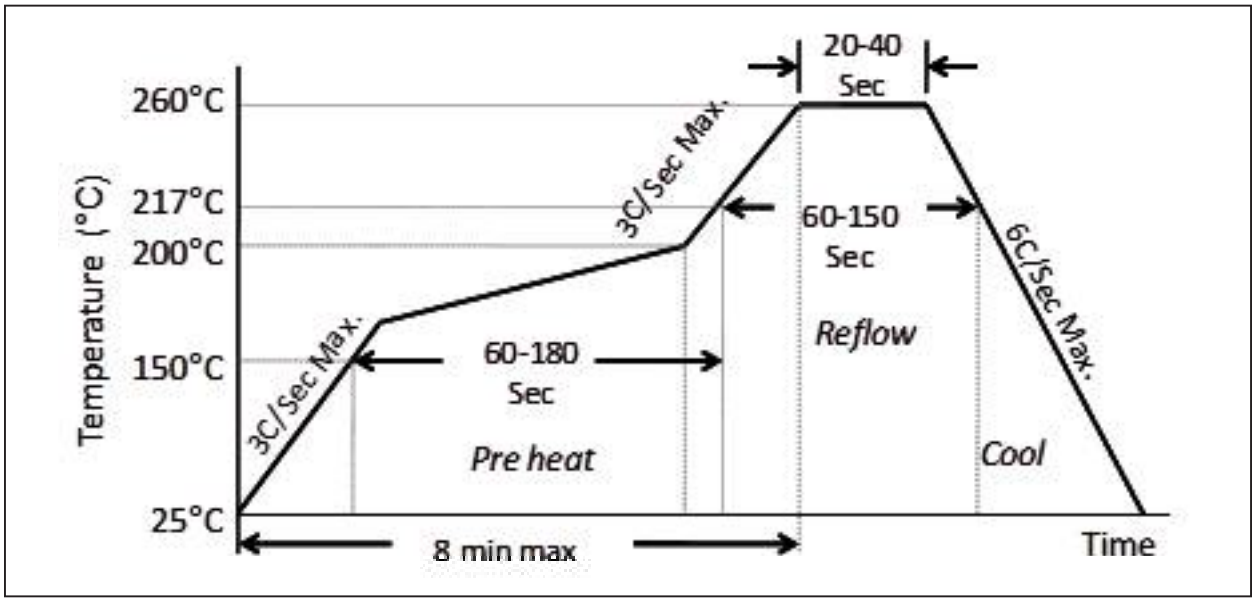

MSL 1 @ 260°C refer to JSTD-020C	
Ramp-Up Rate (200°C to Peak Temp)	3°C/Sec. Max.
Preheat Time 150°C to 200°C	60-180 Sec.
Time Maintained Above 217°C	60-150 Sec.
Peak Temperature	255-260°C
Time within 5°C of Actual Peak	20-40 Sec.
Ramp-Down Rate	6°C/Sec. Max.
Time 25°C to Peak Temperature	8 minutes Max.

© 2017-2019 Microchip Technology Inc.

8.0 PACKAGING INFORMATION

8.1 Package Marking Information

6-Pin CDFN/VDFN*

```
XXXXXXX
DCPYYWW
   0SSS
●
```

Example

```
0750000
DCP1723
   0421
●
```

Legend:	XX...X	Product code, customer-specific information, or frequency in MHz without printed decimal point
	Y	Year code (last digit of calendar year)
	YY	Year code (last 2 digits of calendar year)
	WW	Week code (week of January 1 is week '01')
	SSS	Alphanumeric traceability code
	e3	Pb-free JEDEC® designator for Matte Tin (Sn)
	*	This package is Pb-free. The Pb-free JEDEC designator (e3) can be found on the outer packaging for this package.
	●, ▲, ▼	Pin one index is identified by a dot, delta up, or delta down (triangle
Note:	In the event the full Microchip part number cannot be marked on one line, it will be carried over to the next line, thus limiting the number of available characters for customer-specific information. Package may or may not include the corporate logo.	
	Underbar (_) and/or Overbar (¯) symbol may not be to scale.	

6-Lead VDFN 2.5 mm x 2.0 mm Package Outline and Recommended Land Pattern

6-Lead Very Thin Dual Flatpack No-Leads (J7A) - 2.5x2.0 mm Body [VDFN]

Note: For the most current package drawings, please see the Microchip Packaging Specification located at http://www.microchip.com/packaging

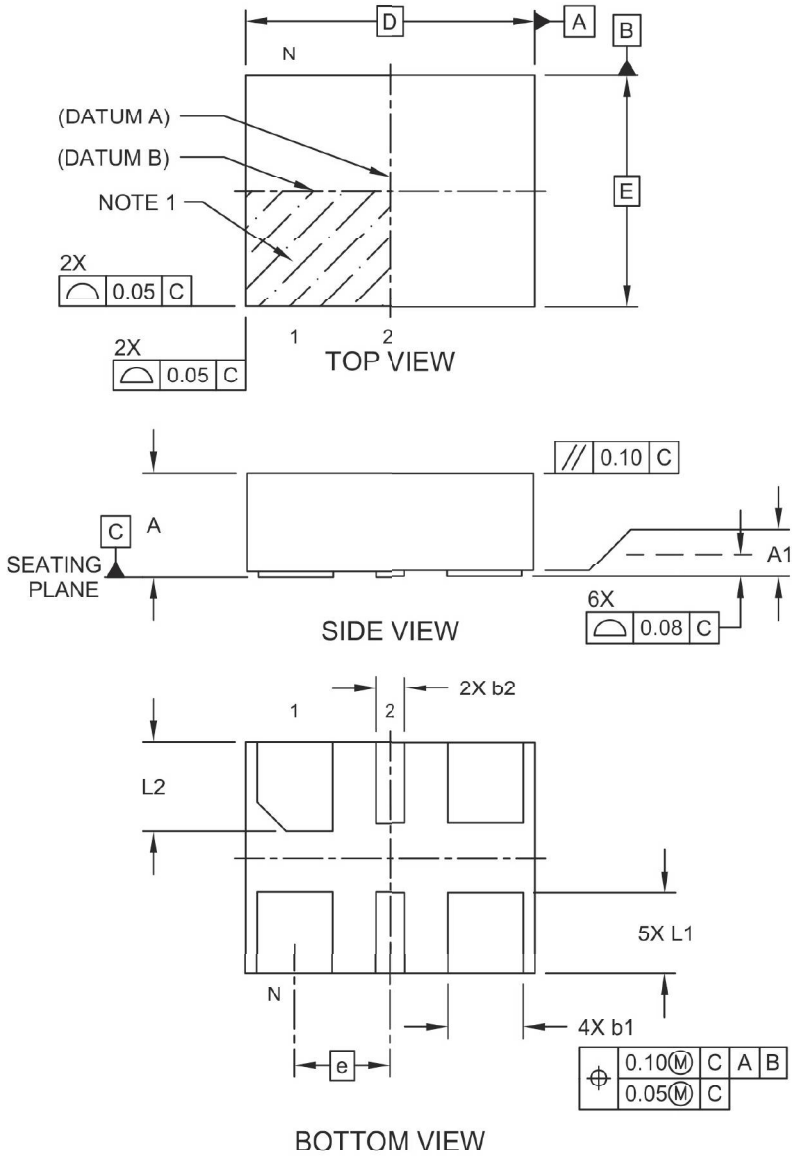

Microchip Technology Drawing C04-1005 Rev C Sheet 1 of 2

© 2017-2019 Microchip Technology Inc.

6-Lead Very Thin Dual Flatpack No-Leads (J7A) - 2.5x2.0 mm Body [VDFN]

Note: For the most current package drawings, please see the Microchip Packaging Specification located at http://www.microchip.com/packaging

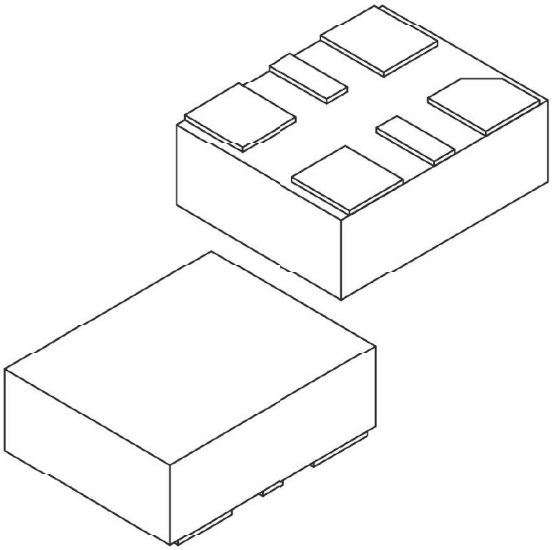

Units		MILLIMETERS		
Dimension Limits		MIN	NOM	MAX
Number of Terminals	N	6		
Pitch	e	0.825 BSC		
Overall Height	A	0.80	0.85	0.90
Standoff	A1	0.00	0.02	0.05
Overall Length	D	2.50 BSC		
Overall Width	E	2.00 BSC		
Terminal Width	b1	0.60	0.65	0.70
Terminal Width	b2	0.20	0.25	0.30
Terminal Length	L1	0.60	0.70	0.80
Terminal Length	L2	0.665	0.765	0.865

Notes:

1. Pin 1 visual index feature may vary, but must be located within the hatched area.
2. Package is saw singulated
3. Dimensioning and tolerancing per ASME Y14.5M

   BSC: Basic Dimension. Theoretically exact value shown without tolerances.

   REF: Reference Dimension, usually without tolerance, for information purposes only.

Microchip Technology Drawing C04-1005 Rev C Sheet 2 of 2

6-Lead Very Thin Dual Flatpack No-Leads (J7A) - 2.5x2.0 mm Body [VDFN]

Note: For the most current package drawings, please see the Microchip Packaging Specification located at http://www.microchip.com/packaging

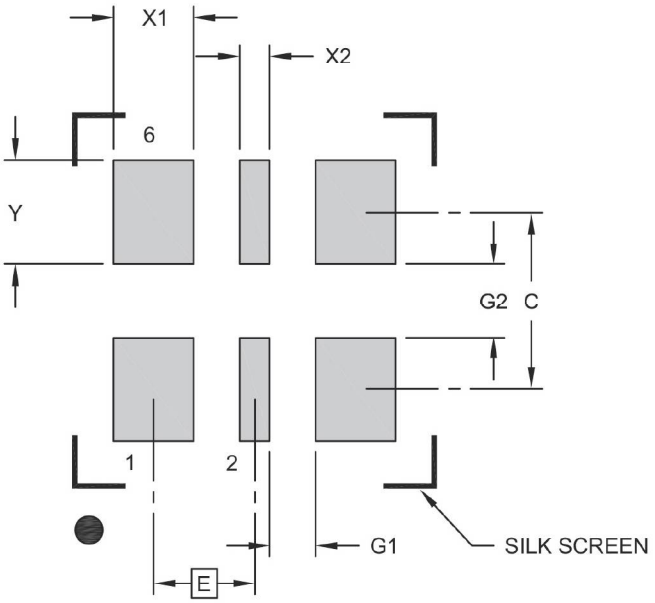

RECOMMENDED LAND PATTERN

Units		MILLIMETERS		
Dimension Limits		MIN	NOM	MAX
Contact Pitch	E		0.825 BSC	
Contact Pad Width (X4)	X1			0.65
Contact Pad Width (X2)	X2			0.25
Contact Pad Length (X6)	Y			0.85
Contact Pad Spacing	C		1.45	
Space Between Contacts (X4)	G1	0.38		
Space Between Contacts (X3)	G2	0.60		

Notes:

1. Dimensioning and tolerancing per ASME Y14.5M
   BSC: Basic Dimension. Theoretically exact value shown without tolerances.
2. For best soldering results, thermal vias, if used, should be filled or tented to avoid solder loss during reflow process

Microchip Technology Drawing C04-3005 Rev C

© 2017-2019 Microchip Technology Inc.

6-Lead VDFN 3.2 mm x 2.5 mm Package Outline and Recommended Land Pattern

6-Lead Very Thin Plastic Dual Flatpack No-Lead (H5A) - 3.2x2.5 mm Body [VDFN]

Note: For the most current package drawings, please see the Microchip Packaging Specification located at http://www.microchip.com/packaging

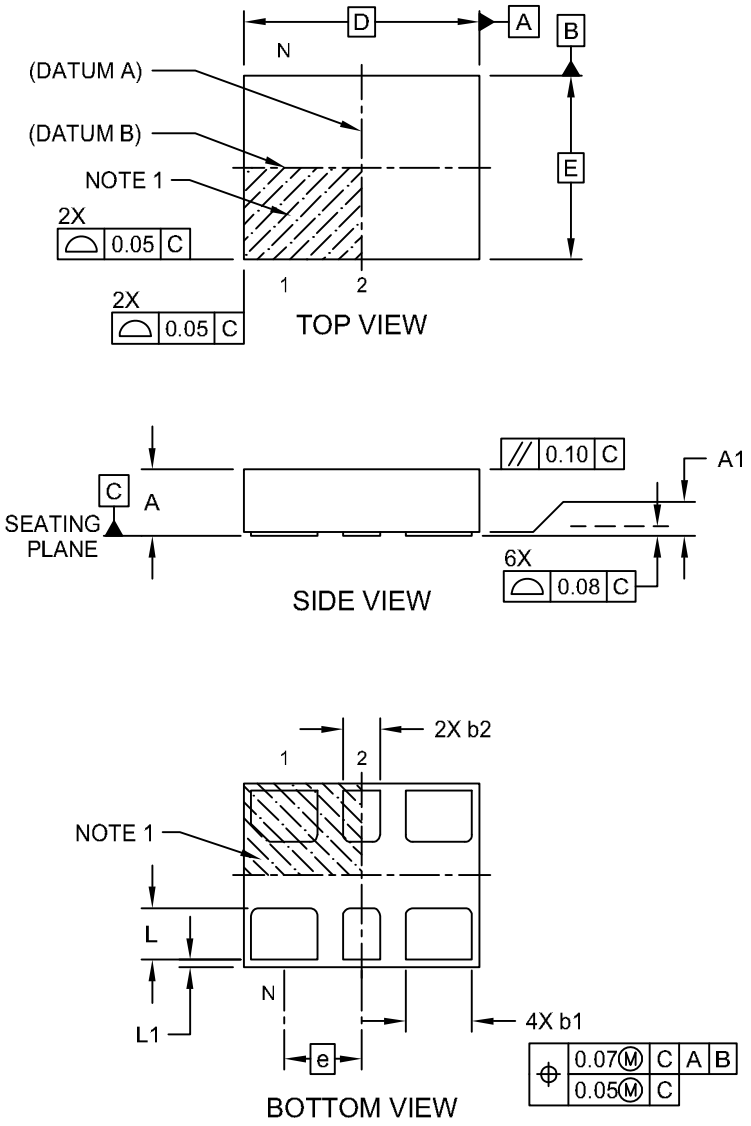

Microchip Technology Drawing C04-1007A Sheet 1 of 2

6-Lead Very Thin Plastic Dual Flatpack No-Lead (H5A) - 3.2x2.5 mm Body [VDFN]

Note: For the most current package drawings, please see the Microchip Packaging Specification located at http://www.microchip.com/packaging

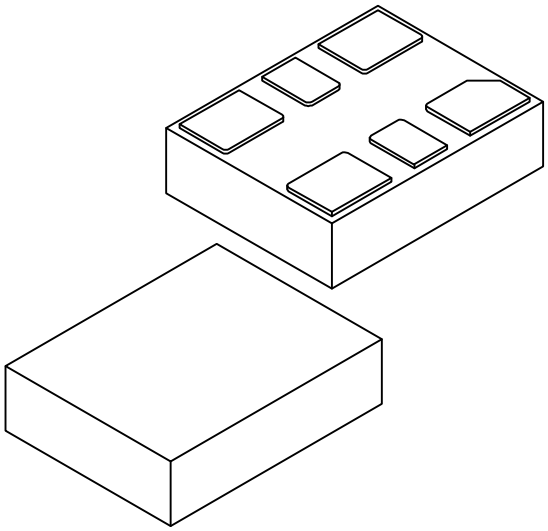

Units		MILLIMETERS		
Dimension Limits		MIN	NOM	MAX
Number of Terminals	N	6		
Pitch	e	1.05 BSC		
Overall Height	A	0.80	0.85	0.90
Standoff	A1	0.00	0.02	0.05
Overall Length	D	3.20 BSC		
Overall Width	E	2.50 BSC		
Terminal Width	b1	0.85	0.90	0.95
Terminal Width	b2	0.45	0.50	0.55
Terminal Length	L	0.65	0.70	0.75
Terminal Pullback	L1	0.10 REF		

Notes:

1. Pin 1 visual index feature may vary, but must be located within the hatched area.
2. Package is saw singulated
3. Dimensioning and tolerancing per ASME Y14.5M

   BSC: Basic Dimension. Theoretically exact value shown without tolerances.

   REF: Reference Dimension, usually without tolerance, for information purposes only.

Microchip Technology Drawing C04-1007A Sheet 2 of 2

© 2017-2019 Microchip Technology Inc.

6-Lead Very Thin Plastic Dual Flatpack No-Lead (H5A) - 3.2x2.5 mm Body [VDFN]

Note: For the most current package drawings, please see the Microchip Packaging Specification located at http://www.microchip.com/packaging

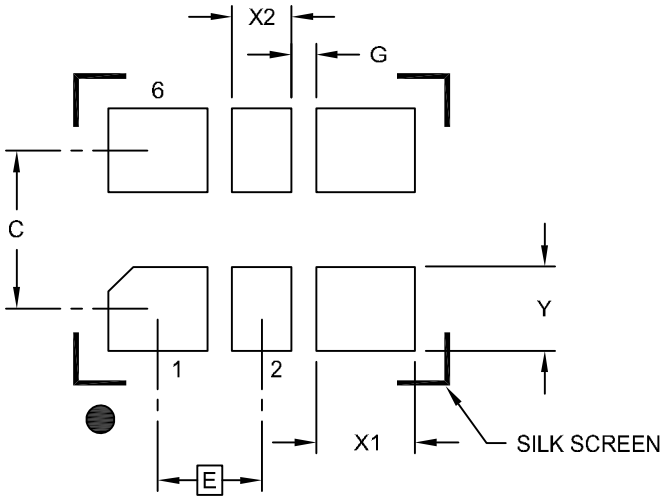

RECOMMENDED LAND PATTERN

Units		MILLIMETERS		
Dimension Limits		MIN	NOM	MAX
Contact Pitch	E		1.05 BSC	
Contact Pad Spacing	C		1.60	
Contact Pad Width (X4)	X1			1.00
Contact Pad Width (X2)	X2			0.60
Contact Pad Length (X6)	Y			0.85
Space Between Contacts (X4)	G1	0.25		

Notes:

1. Dimensioning and tolerancing per ASME Y14.5M
   BSC: Basic Dimension. Theoretically exact value shown without tolerances.

Microchip Technology Drawing C04-3007A

6-Lead CDFN 5.0 mm x 3.2 mm Package Outline and Recommended Land Pattern

TITLE
6 LEAD CDFN 5.0x3.2mm COL PACKAGE OUTLINE & RECOMMENDED LAND PATTERN

DRAWING #	CDFN5032-6LD-PL-1	UNIT	MM

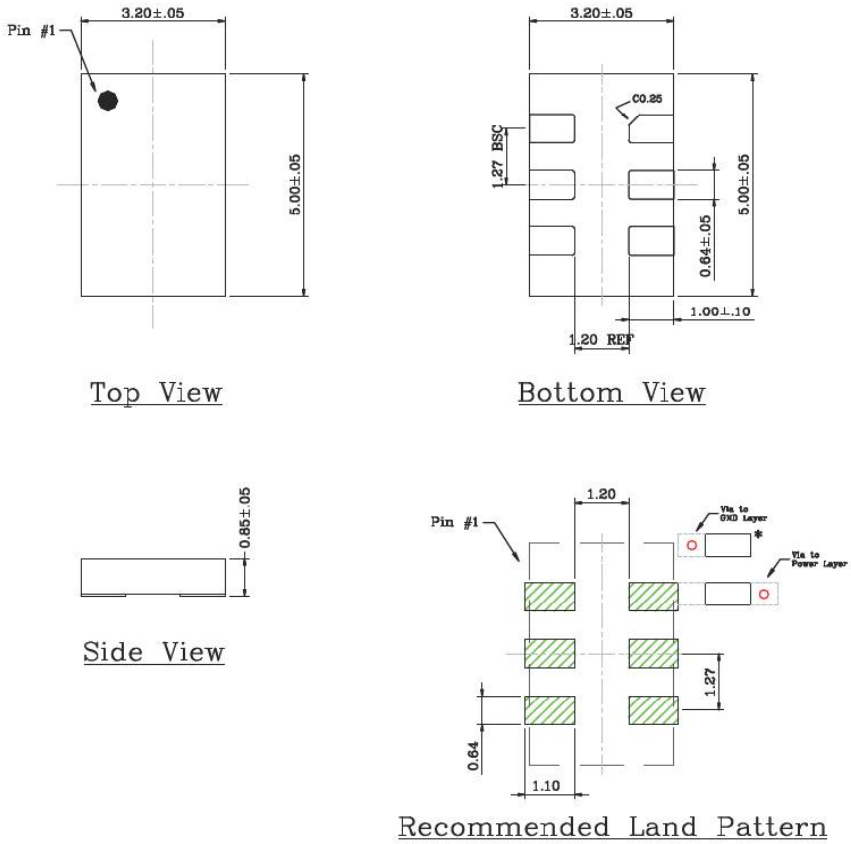

NOTE:

1. * Power Supply Decoupling Capacitor is required in Recommended Land Pattern.
2. Green shaded rectangles in Recommended Land Pattern are solder stencil opening.
3. Red circles in Recommended Land Pattern are thermal VIA.

Note: For the most current package drawings, please see the Microchip Packaging Specification located at http://www.microchip.com/packaging.

© 2017-2019 Microchip Technology Inc.

6-Lead VDFN 7.0 mm x 5.0 mm Package Outline and Recommended Land Pattern

6-Lead Very Thin Plastic Quad Flat, No Lead Package (H8A) - 7x5 mm Body [VDFN] With 2.8x1.8 mm Exposed Pad

Note: For the most current package drawings, please see the Microchip Packaging Specification located at http://www.microchip.com/packaging

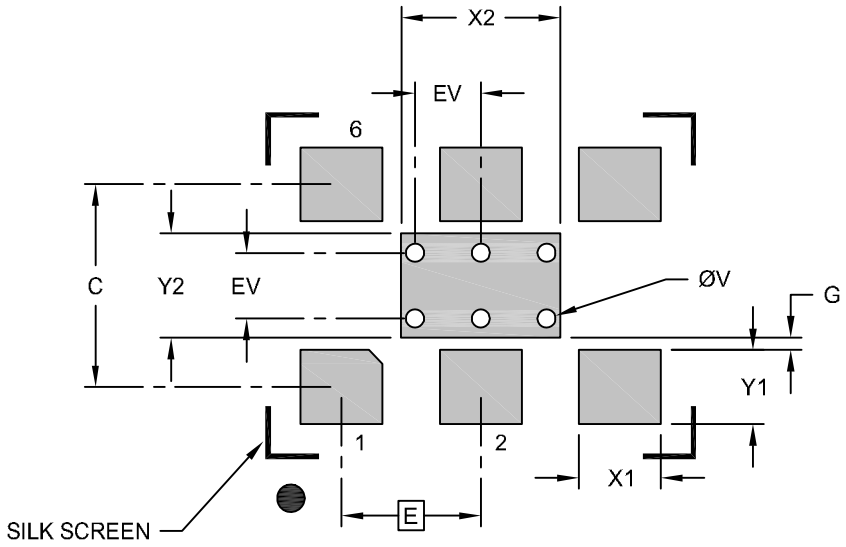

RECOMMENDED LAND PATTERN

Units		MILLIMETERS		
Dimension Limits		MIN	NOM	MAX
Contact Pitch	E		2.54 BSC	
Optional Center Pad Width	X2			2.90
Optional Center Pad Length	Y2			1.90
Contact Pad Spacing	C		3.70	
Contact Pad Width (X6)	X1			1.50
Contact Pad Length (X6)	Y1			1.35
Contact Pad to Center Pad (X2)	G	0.20		
Thermal Via Diameter (X6)	V		0.33	
Thermal Via Pitch	EV		1.20	

Notes:

1. Dimensioning and tolerancing per ASME Y14.5M
   BSC: Basic Dimension. Theoretically exact value shown without tolerances.
2. For best soldering results, thermal vias, if used, should be filled or tented to avoid solder loss during reflow process

Microchip Technology Drawing C04-3010A

6-Lead Very Thin Plastic Quad Flat, No Lead Package (H8A) - 7x5 mm Body [VDFN] With 2.8x1.8 mm Exposed Pad

Note: For the most current package drawings, please see the Microchip Packaging Specification located at http://www.microchip.com/packaging

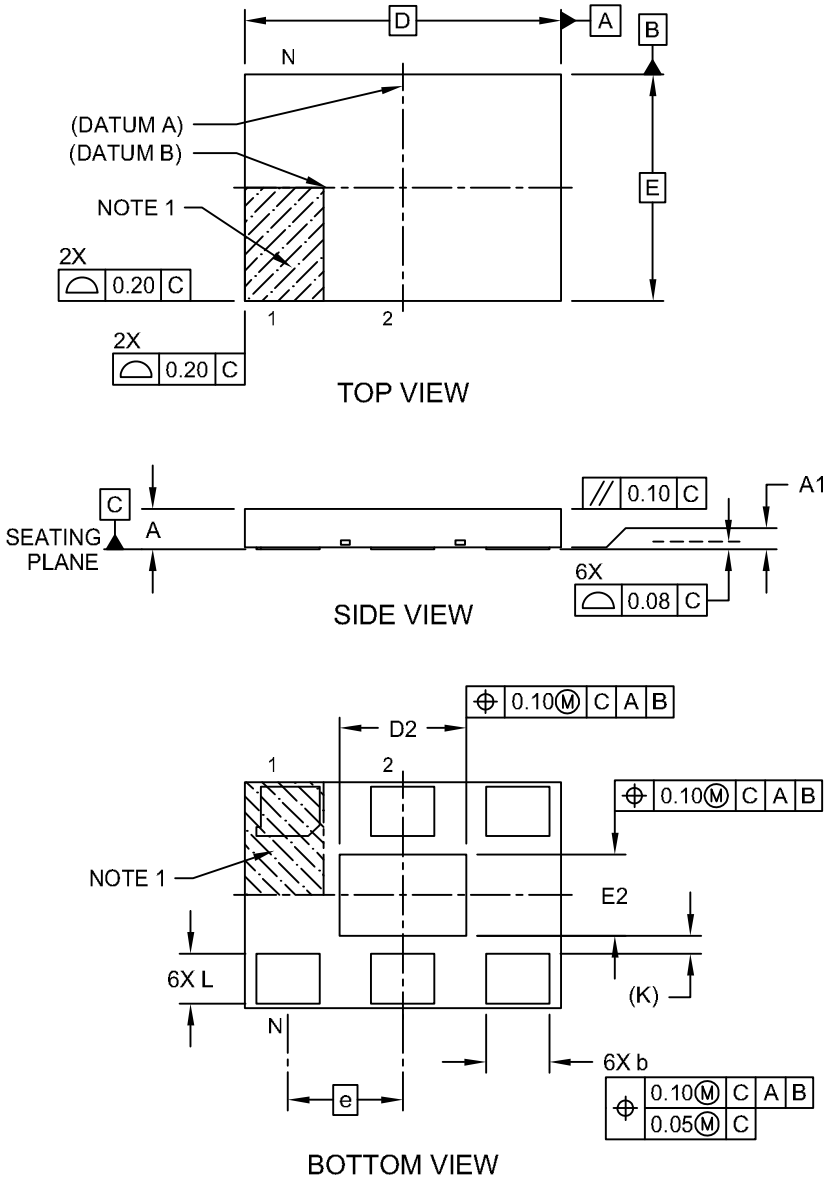

Microchip Technology Drawing C04-1010A Sheet 1 of 2

© 2017-2019 Microchip Technology Inc.

6-Lead Very Thin Plastic Quad Flat, No Lead Package (H8A) - 7x5 mm Body [VDFN] With 2.8x1.8 mm Exposed Pad

Note: For the most current package drawings, please see the Microchip Packaging Specification located at http://www.microchip.com/packaging

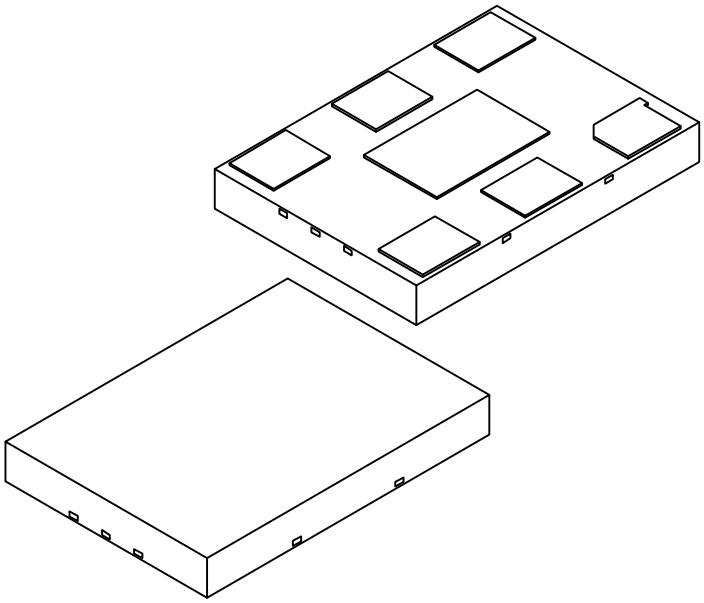

Units		MILLIMETERS		
Dimension Limits		MIN	NOM	MAX
Number of Terminals	N	6		
Pitch	e	2.54		
Overall Height	A	0.80	0.85	0.90
Standoff	A1	0.00	0.02	0.05
Overall Length	D	7.00 BSC		
Exposed Pad Length	D2	2.70	2.80	2.90
Overall Width	E	5.00 BSC		
Exposed Pad Width	E2	1.70	1.80	1.90
Terminal Width	b	1.35	1.40	1.45
Terminal Length	L	1.00	1.10	1.20
Terminal-to-Exposed-Pad	K	0.20 REF		

Notes:

1. Pin 1 visual index feature may vary, but must be located within the hatched area.
2. Package is saw singulated
3. Dimensioning and tolerancing per ASME Y14.5M

   BSC: Basic Dimension. Theoretically exact value shown without tolerances.

   REF: Reference Dimension, usually without tolerance, for information purposes only.

Microchip Technology Drawing C04-1010A Sheet 2 of 2

6-Lead CDFN 7.0 mm x 5.0 mm Package Outline and Recommended Land Pattern

TITLE
6 LEAD CDFN 7.0x5.0mm COL PACKAGE OUTLINE & RECOMMENDED LAND PATTERN

DRAWING #	CDFN75-6LD-PL-1	UNIT	MM

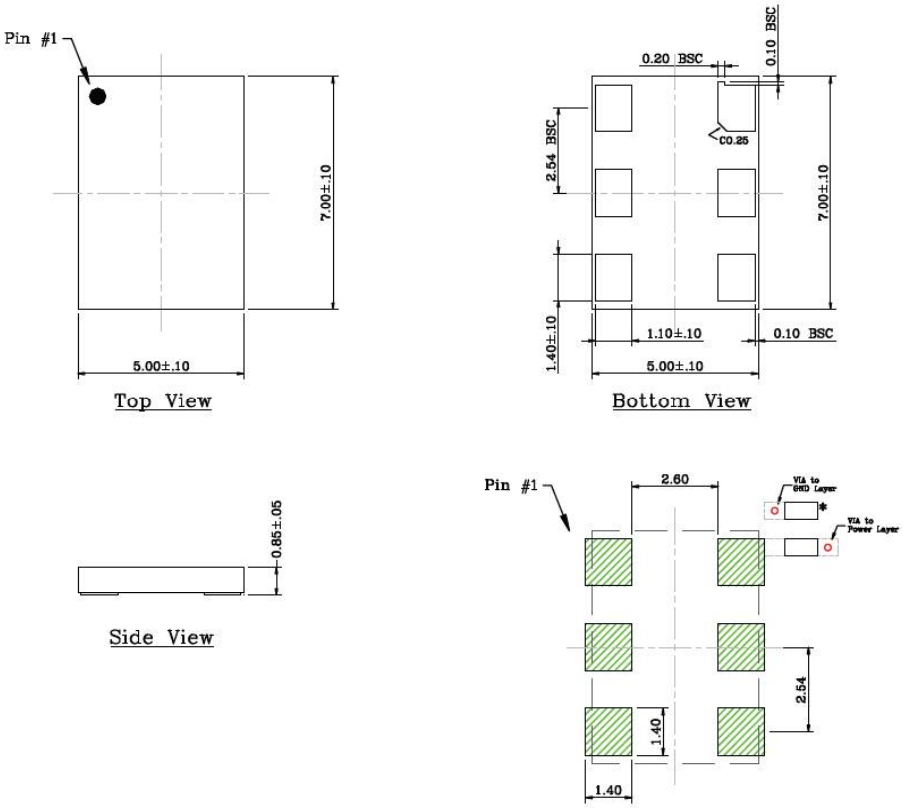

NOTE:

1. * Power Supply Decoupling Capacitor is required in Recommended Land Pattern.
2. Green shaded rectangles in Recommended Land Pattern are solder stencil opening.
3. Red circles in Recommended Land Pattern are thermal VIA.

Note: For the most current package drawings, please see the Microchip Packaging Specification located at http://www.microchip.com/packaging.

© 2017-2019 Microchip Technology Inc.

PRODUCT IDENTIFICATION SYSTEM

To order or obtain information, e.g., on pricing or delivery, contact your local Microchip representative or sales office.

PART NO.	X	X	X	-XXX.XXXX	X
Device	Package	Temperature Range	Stability	Frequency	Packaging Option

Device:	DSC1101:	Low-Power Precision CMOS Oscillator with Standby	
	DSC1121:	Low-Power Precision CMOS Oscillator	
Package:	A	=	6-Lead 7.0 mm x 5.0 mm VDFN
	B	=	6-Lead 5.0 mm x 3.2 mm CDFN
	C	=	6-Lead 3.2 mm x 2.5 mm VDFN
	D	=	6-Lead 2.5 mm x 2.0 mm VDFN
	N	=	6-Lead 7.0 mm x 5.0 mm CDFN (no center pad)
Temperature Range:	E	=	–20°C to +70°C (Extended Commercial)
	I	=	–40°C to +85°C (Industrial)
	L	=	–40°C to +105°C (Extended Industrial)
	M	=	–55°C to +125°C (Automotive)
Stability:	1	=	±50 ppm
	2	=	±25 ppm
	3	=	±20 ppm
	5	=	±10 ppm
Frequency:	xxx.xxxx	=	2.3 MHz to 170 MHz (user-defined)
Packing Option:	<blank>=		110/Tube
	T	=	1,000/Reel

Examples:

a) DSC1101AM1-010.0000T:
Low-Power Precision CMOS Oscillator with Standby, 6-LD 7.0X5.0 VDFN, Automotive Temperature Range, ±50 ppm, 10 MHz Output Frequency, 1,000/Reel

b) DSC1101BL2-030.0000:
Low-Power Precision CMOS Oscillator with Standby, 6-LD 5.0X3.2 CDFN, Extended Industrial Temperature Range, ±25 ppm, 30 MHz Output Frequency, 110/Tube

c) DSC1101DE5-150.0000:
Low-Power Precision CMOS Oscillator with Standby, 6-LD 2.5X2.0 VDFN, Extended Commercial Temperature Range, ±10 ppm, 150 MHz Output Frequency, 110/Tube

d) DSC1101AI2-075.0000T:
Low-Power Precision CMOS Oscillator with Standby, 6-LD 7.0X5.0 VDFN, Industrial Temperature Range, ±25 ppm, 75 MHz Output Frequency, 1,000/Reel

Note 1: Tape and Reel identifier only appears in the catalog part number description. This identifier is used for ordering purposes and is not printed on the device package. Check with your Microchip Sales Office for package availability with the Tape and Reel option.

Note the following details of the code protection feature on Microchip devices:

- Microchip products meet the specification contained in their particular Microchip Data Sheet.
- Microchip believes that its family of products is one of the most secure families of its kind on the market today, when used in the intended manner and under normal conditions.
- There are dishonest and possibly illegal methods used to breach the code protection feature. All of these methods, to our knowledge, require using the Microchip products in a manner outside the operating specifications contained in Microchip's Data Sheets. Most likely, the person doing so is engaged in theft of intellectual property.
- Microchip is willing to work with the customer who is concerned about the integrity of their code.
- Neither Microchip nor any other semiconductor manufacturer can guarantee the security of their code. Code protection does not mean that we are guaranteeing the product as "unbreakable."

Code protection is constantly evolving. We at Microchip are committed to continuously improving the code protection features of our products. Attempts to break Microchip's code protection feature may be a violation of the Digital Millennium Copyright Act. If such acts allow unauthorized access to your software or other copyrighted work, you may have a right to sue for relief under that Act.

Information contained in this publication regarding device applications and the like is provided only for your convenience and may be superseded by updates. It is your responsibility to ensure that your application meets with your specifications. MICROCHIP MAKES NO REPRESENTATIONS OR WARRANTIES OF ANY KIND WHETHER EXPRESS OR IMPLIED, WRITTEN OR ORAL, STATUTORY OR OTHERWISE, RELATED TO THE INFORMATION, INCLUDING BUT NOT LIMITED TO ITS CONDITION, QUALITY, PERFORMANCE, MERCHANTABILITY OR FITNESS FOR PURPOSE. Microchip disclaims all liability arising from this information and its use. Use of Microchip devices in life support and/or safety applications is entirely at the buyer's risk, and the buyer agrees to defend, indemnify and hold harmless Microchip from any and all damages, claims, suits, or expenses resulting from such use. No licenses are conveyed, implicitly or otherwise, under any Microchip intellectual property rights unless otherwise stated.

For information regarding Microchip's Quality Management Systems, please visit www.microchip.com/quality.

Trademarks

The Microchip name and logo, the Microchip logo, Adaptec, AnyRate, AVR, AVR logo, AVR Freaks, BesTime, BitCloud, chipKIT, chipKIT logo, CryptoMemory, CryptoRF, dsPIC, FlashFlex, flexPWR, HELDO, IGLOO, JukeBlox, KeeLoq, Kleer, LANCheck, LinkMD, maXStylus, maXTouch, MediaLB, megaAVR, Microsemi, Microsemi logo, MOST, MOST logo, MPLAB, OptoLyzer, PackeTime, PIC, picoPower, PICSTART, PIC32 logo, PolarFire, Prochip Designer, QTouch, SAM-BA, SenGenuity, SpyNIC, SST, SST Logo, SuperFlash, Symmetricom, SyncServer, Tachyon, TempTrackr, TimeSource, tinyAVR, UNI/O, Vectron, and XMEGA are registered trademarks of Microchip Technology Incorporated in the U.S.A. and other countries.

APT, ClockWorks, The Embedded Control Solutions Company, EtherSynch, FlashTec, Hyper Speed Control, HyperLight Load, IntelliMOS, Libero, motorBench, mTouch, Powermite 3, Precision Edge, ProASIC, ProASIC Plus, ProASIC Plus logo, Quiet-Wire, SmartFusion, SyncWorld, Temux, TimeCesium, TimeHub, TimePictra, TimeProvider, Vite, WinPath, and ZL are registered trademarks of Microchip Technology Incorporated in the U.S.A.

Adjacent Key Suppression, AKS, Analog-for-the-Digital Age, Any Capacitor, AnyIn, AnyOut, BlueSky, BodyCom, CodeGuard, CryptoAuthentication, CryptoAutomotive, CryptoCompanion, CryptoController, dsPICDEM, dsPICDEM.net, Dynamic Average Matching, DAM, ECAN, EtherGREEN, In-Circuit Serial Programming, ICSP, INICnet, Inter-Chip Connectivity, JitterBlocker, KleerNet, KleerNet logo, memBrain, Mindi, MiWi, MPASM, MPF, MPLAB Certified logo, MPLIB, MPLINK, MultiTRAK, NetDetach, Omniscient Code Generation, PICDEM, PICDEM.net, PICkit, PICtail, PowerSmart, PureSilicon, QMatrix, REAL ICE, Ripple Blocker, SAM-ICE, Serial Quad I/O, SMART-I.S., SQI, SuperSwitcher, SuperSwitcher II, Total Endurance, TSHARC, USBCheck, VariSense, ViewSpan, WiperLock, Wireless DNA, and ZENA are trademarks of Microchip Technology Incorporated in the U.S.A. and other countries.

SQTP is a service mark of Microchip Technology Incorporated in the U.S.A.
The Adaptec logo, Frequency on Demand, Silicon Storage Technology, and Symmcom are registered trademarks of Microchip Technology Inc. in other countries.
GestIC is a registered trademark of Microchip Technology Germany II GmbH & Co. KG, a subsidiary of Microchip Technology Inc., in other countries.
All other trademarks mentioned herein are property of their respective companies.

© 2017-2019, Microchip Technology Incorporated, All Rights Reserved.

ISBN: 978-1-5224-5398-7

Worldwide Sales and Service

AMERICAS

Corporate Office
2355 West Chandler Blvd.
Chandler, AZ 85224-6199
Tel: 480-792-7200
Fax: 480-792-7277
Technical Support:
http://www.microchip.com/support
Web Address:
www.microchip.com

Atlanta
Duluth, GA
Tel: 678-957-9614
Fax: 678-957-1455

Austin, TX
Tel: 512-257-3370

Boston
Westborough, MA
Tel: 774-760-0087
Fax: 774-760-0088

Chicago
Itasca, IL
Tel: 630-285-0071
Fax: 630-285-0075

Dallas
Addison, TX
Tel: 972-818-7423
Fax: 972-818-2924

Detroit
Novi, MI
Tel: 248-848-4000

Houston, TX
Tel: 281-894-5983

Indianapolis
Noblesville, IN
Tel: 317-773-8323
Fax: 317-773-5453
Tel: 317-536-2380

Los Angeles
Mission Viejo, CA
Tel: 949-462-9523
Fax: 949-462-9608
Tel: 951-273-7800

Raleigh, NC
Tel: 919-844-7510

New York, NY
Tel: 631-435-6000

San Jose, CA
Tel: 408-735-9110
Tel: 408-436-4270

Canada - Toronto
Tel: 905-695-1980
Fax: 905-695-2078

ASIA/PACIFIC

Australia - Sydney
Tel: 61-2-9868-6733

China - Beijing
Tel: 86-10-8569-7000

China - Chengdu
Tel: 86-28-8665-5511

China - Chongqing
Tel: 86-23-8980-9588

China - Dongguan
Tel: 86-769-8702-9880

China - Guangzhou
Tel: 86-20-8755-8029

China - Hangzhou
Tel: 86-571-8792-8115

China - Hong Kong SAR
Tel: 852-2943-5100

China - Nanjing
Tel: 86-25-8473-2460

China - Qingdao
Tel: 86-532-8502-7355

China - Shanghai
Tel: 86-21-3326-8000

China - Shenyang
Tel: 86-24-2334-2829

China - Shenzhen
Tel: 86-755-8864-2200

China - Suzhou
Tel: 86-186-6233-1526

China - Wuhan
Tel: 86-27-5980-5300

China - Xian
Tel: 86-29-8833-7252

China - Xiamen
Tel: 86-592-2388138

China - Zhuhai
Tel: 86-756-3210040

ASIA/PACIFIC

India - Bangalore
Tel: 91-80-3090-4444

India - New Delhi
Tel: 91-11-4160-8631

India - Pune
Tel: 91-20-4121-0141

Japan - Osaka
Tel: 81-6-6152-7160

Japan - Tokyo
Tel: 81-3-6880- 3770

Korea - Daegu
Tel: 82-53-744-4301

Korea - Seoul
Tel: 82-2-554-7200

Malaysia - Kuala Lumpur
Tel: 60-3-7651-7906

Malaysia - Penang
Tel: 60-4-227-8870

Philippines - Manila
Tel: 63-2-634-9065

Singapore
Tel: 65-6334-8870

Taiwan - Hsin Chu
Tel: 886-3-577-8366

Taiwan - Kaohsiung
Tel: 886-7-213-7830

Taiwan - Taipei
Tel: 886-2-2508-8600

Thailand - Bangkok
Tel: 66-2-694-1351

Vietnam - Ho Chi Minh
Tel: 84-28-5448-2100

EUROPE

Austria - Wels
Tel: 43-7242-2244-39
Fax: 43-7242-2244-393

Denmark - Copenhagen
Tel: 45-4450-2828
Fax: 45-4485-2829

Finland - Espoo
Tel: 358-9-4520-820

France - Paris
Tel: 33-1-69-53-63-20
Fax: 33-1-69-30-90-79

Germany - Garching
Tel: 49-8931-9700

Germany - Haan
Tel: 49-2129-3766400

Germany - Heilbronn
Tel: 49-7131-72400

Germany - Karlsruhe
Tel: 49-721-625370

Germany - Munich
Tel: 49-89-627-144-0
Fax: 49-89-627-144-44

Germany - Rosenheim
Tel: 49-8031-354-560

Israel - Ra'anana
Tel: 972-9-744-7705

Italy - Milan
Tel: 39-0331-742611
Fax: 39-0331-466781

Italy - Padova
Tel: 39-049-7625286

Netherlands - Drunen
Tel: 31-416-690399
Fax: 31-416-690340

Norway - Trondheim
Tel: 47-7288-4388

Poland - Warsaw
Tel: 48-22-3325737

Romania - Bucharest
Tel: 40-21-407-87-50

Spain - Madrid
Tel: 34-91-708-08-90
Fax: 34-91-708-08-91

Sweden - Gothenberg
Tel: 46-31-704-60-40

Sweden - Stockholm
Tel: 46-8-5090-4654

UK - Wokingham
Tel: 44-118-921-5800
Fax: 44-118-921-5820

© 2017-2019 Microchip Technology Inc.

SYST-12CGPY487 - Data Sheet - DSC1101 DSC1121 Data Sheet

Affected Catalog Part Numbers(CPN)

DSC1101CM1-008.0000
DSC1101CM1-025.0000
DSC1101CM2-020.0000
DSC1101CM2-062.2080
DSC1101CM1-075.0000
DSC1101CM1-005.0000
DSC1101CM1-033.3333
DSC1101CM2-008.0000
DSC1101CM2-012.0000
DSC1101CM2-048.0000
DSC1101CM1-040.0000
DSC1101CM3-024.0000
DSC1101CM1-032.0000
DSC1101BM2-025.0000
DSC1101BM2-100.0000
DSC1101BM2-074.2500
DSC1101BM2-027.0000
DSC1101BM2-050.0000
DSC1101BM2-054.0000
DSC1101AM1-160.0000
DSC1101AM2-004.0000
DSC1101AM2-100.0000
DSC1101AM2-014.3950
DSC1101AM2-030.0000
DSC1101DM1-033.3330
DSC1101DM2-016.0000
DSC1101DM2-020.0000
DSC1101DM2-025.0000
DSC1101DM1-012.0000
DSC1101DM2-012.0000
DSC1101DM2-004.0000
DSC1101DM1-033.3333
DSC1101DM2-033.3333
DSC1101DM2-008.0000
DSC1101DM2-024.0000
DSC1101DM1-080.0000
DSC1101DM2-007.3700
DSC1101DM1-032.0000
DSC1101DM1-007.3700
DSC1101DM2-040.0000
DSC1101DM2-048.0000
DSC1101DM1-020.0000

DSC1101CI1-148.3516
DSC1101CI1-148.5000
DSC1101CI2-014.7456
DSC1101CI2-025.0000
DSC1101CI2-030.0000
DSC1101CI2-050.0000
DSC1101CI2-100.0000
DSC1101CI5-020.0000
DSC1101CI5-022.5791
DSC1101CI5-024.5760
DSC1101CI5-050.0000
DSC1101CI5-025.0000
DSC1101CI1-025.0000
DSC1101CI1-125.0000
DSC1101CI1-008.0000
DSC1101CI1-010.0000
DSC1101CI5-125.0000
DSC1101CI5-100.0000
DSC1101CI5-027.0000
DSC1101CI5-026.0000
DSC1101CI1-012.0000
DSC1101CI2-133.0000
DSC1101CI5-032.0000
DSC1101CI2-032.0000
DSC1101CI1-050.0000
DSC1101CI2-066.6667
DSC1101CI2-125.0000
DSC1101CI1-018.7500
DSC1101CI5-048.0000
DSC1101CI5-072.0000
DSC1101CI1-085.2070
DSC1101CI5-024.0000
DSC1101CI2-020.0000
DSC1101CI2-060.0000
DSC1101CI2-036.0000
DSC1101CI5-016.0000
DSC1101CI5-008.0000
DSC1101CI5-157.2864
DSC1101CI1-024.0000
DSC1101BI5-022.5792
DSC1101BI5-024.5760
DSC1101BI5-050.0000
DSC1101BI5-133.0000
DSC1101BI2-125.0000
DSC1101BI2-024.5760
DSC1101BI2-125.0031
DSC1101BI5-010.0000

DSC1101BI3-025.0000
DSC1101BI2-125.0037
DSC1101BI2-008.0000
DSC1101BI5-016.0000
DSC1101BI5-012.0000
DSC1101BI5-020.0000
DSC1101BI3-013.5600
DSC1101BI2-027.1200
DSC1101BI1-145.2000
DSC1101AI2-148.5000
DSC1101AI2-080.0000
DSC1101AI2-040.0000
DSC1101AI2-064.0000
DSC1101AI5-019.4400
DSC1101AI2-125.0000
DSC1101AI2-120.0000
DSC1101AI5-099.7200
DSC1101AI2-025.0000
DSC1101AI5-156.2500
DSC1101AI2-156.2500
DSC1101AI5-056.3200
DSC1101AI5-048.0000
DSC1101AI5-032.0000
DSC1101AI5-010.0000
DSC1101AI2-150.0000
DSC1101AI5-080.0000
DSC1101AI5-064.0000
DSC1101AI2-027.0000
DSC1101AI1-008.0000
DSC1101AI5-060.0000
DSC1101AI5-114.2850
DSC1101AI3-125.0000
DSC1101AI2-066.6666
DSC1101NI1-125.0062
DSC1101NI1-156.2500
DSC1101NI5-100.0000
DSC1101NI5-025.0000
DSC1101NI5-020.0000
DSC1101NI5-012.8000
DSC1101NI5-016.3840
DSC1101NI1-050.0000
DSC1101NI5-018.7500
DSC1101NI2-050.0000
DSC1101NI2-025.0000
DSC1101NI2-018.7500
DSC1101DI2-025.0000
DSC1101DI5-020.0000

DSC1101DI5-026.0000
DSC1101DI5-072.0000
DSC1101DI5-060.0000
DSC1101DI1-025.0000
DSC1101DI1-012.0000
DSC1101DI5-012.0000
DSC1101DI1-150.0000
DSC1101DI5-016.0000
DSC1101DI2-050.6880
DSC1101DI5-030.2400
DSC1101DI1-125.0000
DSC1101DI5-013.5288
DSC1101DI5-032.0000
DSC1101DI2-049.1520
DSC1101DI1-038.0000
DSC1101DI3-025.0000
DSC1101DI1-100.0000
DSC1101DI5-024.0000
DSC1101DI5-100.0000
DSC1101DI5-045.1584
DSC1101DI5-049.1520
DSC1101DI5-018.4320
DSC1101DI3-012.0000
DSC1101DI2-060.0000
DSC1101DI5-025.0000
DSC1101DI5-036.0000
DSC1101DI1-036.0000
DSC1101DI2-012.0000
DSC1101DI5-125.0000
DSC1101CE1-024.0000
DSC1101CL2-016.3840
DSC1101CL2-020.0000
DSC1101CL5-027.0000
DSC1101CL5-040.0000
DSC1101CL5-100.0000
DSC1101CL5-014.7456
DSC1101CL2-024.7500
DSC1101CL3-PROG
DSC1101CL5-PROG
DSC1101CE2-100.0000
DSC1101CE5-010.0000
DSC1101CL2-040.0000
DSC1101CE2-045.1584
DSC1101CE2-049.1520
DSC1101CL1-125.0000
DSC1101CL5-030.0000
DSC1101CE5-025.0000

DSC1101CE2-025.0000
DSC1101CE1-024.5790
DSC1101CE1-022.5792
DSC1101CE1-011.2896
DSC1101CL5-052.5000
DSC1101CE1-024.5760
DSC1101CE5-024.0000
DSC1101CE5-100.0000
DSC1101CE5-045.1854
DSC1101CE5-049.1520
DSC1101CE5-022.5792
DSC1101CE5-024.5760
DSC1101CL3-025.0000
DSC1101CE1-100.0000
DSC1101CE1-054.0000
DSC1101CL2-025.0000
DSC1101CL2-050.0000
DSC1101CL2-100.0000
DSC1101CL2-125.0000
DSC1101CE1-080.0000
DSC1101CE3-024.0000
DSC1101CE5-045.1584
DSC1101CL2-026.0000
DSC1101BE5-024.5760
DSC1101BE5-022.5792
DSC1101BE1-012.0000
DSC1101BL3-PROG
DSC1101BL5-PROG
DSC1101BL5-024.0000
DSC1101BE3-024.0000
DSC1101BL5-018.4320
DSC1101BL5-022.1184
DSC1101AE1-050.0000
DSC1101AE1-125.0000
DSC1101AE1-133.0000
DSC1101AE5-007.6800
DSC1101AE5-040.6080
DSC1101AE1-170.0000
DSC1101AL5-112.4400
DSC1101AE2-027.1200
DSC1101AE5-032.0000
DSC1101AE1-011.0000
DSC1101AE1-002.3000
DSC1101AE1-016.0000
DSC1101AE2-016.3840
DSC1101AL3-PROG
DSC1101AL5-PROG

DSC1101AE3-084.6720
DSC1101AE3-090.3168
DSC1101AE3-098.3040
DSC1101AE5-022.5792
DSC1101AE5-024.5760
DSC1101AL5-045.1584
DSC1101AL5-049.1520
DSC1101AE1-090.0000
DSC1101AE1-024.0000
DSC1101AE3-024.0000
DSC1101NL3-PROG
DSC1101NL5-PROG
DSC1101DE2-008.0000
DSC1101DL1-033.3330
DSC1101DL1-100.0000
DSC1101DL2-040.0000
DSC1101DL5-050.0000
DSC1101DL5-013.5600
DSC1101DL5-025.0000
DSC1101DL5-052.8000
DSC1101DL1-027.0000
DSC1101DL5-020.0000
DSC1101DL5-016.0000
DSC1101DL2-050.6880
DSC1101DL1-150.0000
DSC1101DL5-024.5760
DSC1101DL5-018.4320
DSC1101DE5-040.0000
DSC1101DE5-012.2880
DSC1101DE2-049.1520
DSC1101DE2-045.1584
DSC1101DL3-PROG
DSC1101DL5-PROG
DSC1101DE2-024.5760
DSC1101DE2-022.5792
DSC1101DE2-100.0000
DSC1101DE2-012.0000
DSC1101DL2-033.3300
DSC1101DL1-020.0000
DSC1101DL2-025.0000
DSC1101CL2-016.3840T
DSC1101CL5-027.0000T
DSC1101CL2-002.5000T
DSC1101CL5-100.0000T
DSC1101CL5-014.7456T
DSC1101CL2-024.7500T
DSC1101CL3-PROGT

DSC1101CL5-PROGT
DSC1101CE2-100.0000T
DSC1101CE5-010.0000T
DSC1101CL2-040.0000T
DSC1101CE2-045.1584T
DSC1101CE2-049.1520T
DSC1101CL1-125.0000T
DSC1101CL5-030.0000T
DSC1101CE5-025.0000T
DSC1101CE2-025.0000T
DSC1101CE1-024.5790T
DSC1101CE1-022.5792T
DSC1101CE1-011.2896T
DSC1101CL5-052.5000T
DSC1101CE1-024.5760T
DSC1101CE5-024.0000T
DSC1101CE5-100.0000T
DSC1101CE5-045.1854T
DSC1101CE5-049.1520T
DSC1101CE5-022.5792T
DSC1101CE5-024.5760T
DSC1101CL3-025.0000T
DSC1101CE1-100.0000T
DSC1101CE1-054.0000T
DSC1101CL2-025.0000T
DSC1101CL2-050.0000T
DSC1101CL2-100.0000T
DSC1101CL2-125.0000T
DSC1101CE1-080.0000T
DSC1101CE3-024.0000T
DSC1101CE5-045.1584T
DSC1101CL2-026.0000T
DSC1101BE1-050.0000T
DSC1101BE5-024.5760T
DSC1101BE5-022.5792T
DSC1101BE1-012.0000T
DSC1101BL3-PROGT
DSC1101BL5-PROGT
DSC1101BL5-024.0000T
DSC1101BE3-024.0000T
DSC1101BL5-018.4320T
DSC1101BL5-022.1184T
DSC1101AE1-125.0000T
DSC1101AE1-170.0000T
DSC1101AL5-112.4400T
DSC1101AE2-027.1200T
DSC1101AE5-032.0000T

DSC1101AE1-011.0000T
DSC1101AE1-002.3000T
DSC1101AE1-016.0000T
DSC1101AE2-016.3840T
DSC1101AL3-PROGT
DSC1101AL5-PROGT
DSC1101AE3-084.6720T
DSC1101AE3-090.3168T
DSC1101AE3-098.3040T
DSC1101AE5-022.5792T
DSC1101AE5-024.5760T
DSC1101AL5-045.1584T
DSC1101AL5-049.1520T
DSC1101AE1-090.0000T
DSC1101AE1-024.0000T
DSC1101AE3-024.0000T
DSC1101NL3-PROGT
DSC1101NL5-PROGT
DSC1101DE2-008.0000T
DSC1101DL5-013.5600T
DSC1101DL5-052.8000T
DSC1101DL1-027.0000T
DSC1101DL5-020.0000T
DSC1101DL5-016.0000T
DSC1101DL2-050.6880T
DSC1101DL1-150.0000T
DSC1101DL5-024.5760T
DSC1101DL5-018.4320T
DSC1101DE5-040.0000T
DSC1101DE5-012.2880T
DSC1101DE2-049.1520T
DSC1101DE2-045.1584T
DSC1101DL3-PROGT
DSC1101DL5-PROGT
DSC1101DE2-024.5760T
DSC1101DE2-022.5792T
DSC1101DE2-100.0000T
DSC1101DE2-012.0000T
DSC1101DL2-033.3300T
DSC1101DL1-020.0000T
DSC1101DL2-025.0000T
DSC1101AI2-080.0000T
DSC1101AI2-064.0000T
DSC1101CI2-025.0000T
DSC1101CI2-050.0000T
DSC1101CI2-100.0000T
DSC1101CI5-020.0000T

DSC1101CI5-010.0000T
DSC1101CI5-025.0000T
DSC1101CI1-025.0000T
DSC1101CI1-125.0000T
DSC1101CI1-008.0000T
DSC1101CI1-010.0000T
DSC1101CI5-125.0000T
DSC1101CI5-100.0000T
DSC1101CI5-027.0000T
DSC1101CI5-026.0000T
DSC1101CI1-012.0000T
DSC1101CI2-133.0000T
DSC1101CI5-032.0000T
DSC1101CI2-032.0000T
DSC1101CI1-050.0000T
DSC1101CI2-066.6667T
DSC1101CI2-125.0000T
DSC1101CI1-018.7500T
DSC1101CI5-048.0000T
DSC1101CI5-072.0000T
DSC1101CI1-085.2070T
DSC1101CI5-024.0000T
DSC1101CI2-020.0000T
DSC1101CI2-060.0000T
DSC1101CI2-036.0000T
DSC1101CI5-016.0000T
DSC1101CI5-008.0000T
DSC1101CI5-157.2864T
DSC1101CI1-024.0000T
DSC1101BI5-050.0000T
DSC1101BI5-133.0000T
DSC1101BI2-125.0000T
DSC1101BI2-024.5760T
DSC1101BI2-125.0031T
DSC1101BI5-010.0000T
DSC1101BI3-025.0000T
DSC1101BI2-125.0037T
DSC1101BI2-008.0000T
DSC1101BI5-016.0000T
DSC1101BI5-012.0000T
DSC1101BI5-020.0000T
DSC1101BI3-013.5600T
DSC1101BI2-027.1200T
DSC1101BI1-145.2000T
DSC1101AI2-148.5000T
DSC1101AI2-080.0000T
DSC1101AI2-040.0000T

DSC1101AI2-064.0000T
DSC1101AI5-019.4400T
DSC1101AI2-125.0000T
DSC1101AI2-120.0000T
DSC1101AI5-099.7200T
DSC1101AI2-025.0000T
DSC1101AI5-156.2500T
DSC1101AI2-156.2500T
DSC1101AI5-056.3200T
DSC1101AI5-048.0000T
DSC1101AI5-032.0000T
DSC1101AI5-010.0000T
DSC1101AI2-150.0000T
DSC1101AI5-080.0000T
DSC1101AI5-064.0000T
DSC1101AI2-027.0000T
DSC1101AI1-008.0000T
DSC1101AI5-060.0000T
DSC1101AI5-114.2850T
DSC1101AI3-125.0000T
DSC1101AI2-066.6666T
DSC1101NI5-025.0000T
DSC1101NI5-020.0000T
DSC1101NI5-012.8000T
DSC1101NI5-016.3840T
DSC1101NI1-050.0000T
DSC1101NI5-018.7500T
DSC1101NI2-050.0000T
DSC1101NI2-025.0000T
DSC1101NI2-018.7500T
DSC1101DI2-025.0000T
DSC1101DI5-072.0000T
DSC1101DI5-020.0000T
DSC1101DI5-026.0000T
DSC1101DI5-050.0000T
DSC1101DI5-060.0000T
DSC1101DL5-025.0000T
DSC1101DI1-025.0000T
DSC1101DI1-012.0000T
DSC1101DI5-012.0000T
DSC1101DI1-150.0000T
DSC1101DI5-016.0000T
DSC1101DI2-050.6880T
DSC1101DI5-030.2400T
DSC1101DI1-125.0000T
DSC1101DI5-013.5288T
DSC1101DI5-032.0000T

DSC1101DI2-049.1520T
DSC1101DI1-038.0000T
DSC1101DI3-025.0000T
DSC1101DI1-100.0000T
DSC1101DI5-024.0000T
DSC1101DI5-100.0000T
DSC1101DI5-045.1584T
DSC1101DI5-049.1520T
DSC1101DI5-018.4320T
DSC1101DI3-012.0000T
DSC1101DI2-060.0000T
DSC1101DI5-025.0000T
DSC1101DI5-036.0000T
DSC1101DI1-036.0000T
DSC1101DI2-012.0000T
DSC1101DI5-125.0000T
DSC1101DI1-025.0000TV01
DSC1101DI1-125.0000TV03
DSC1101CM2-062.2080T
DSC1101CM1-075.0000T
DSC1101CM1-005.0000T
DSC1101CM1-033.3333T
DSC1101CM2-012.0000T
DSC1101CM2-048.0000T
DSC1101CM1-040.0000T
DSC1101CM3-024.0000T
DSC1101CM1-032.0000T
DSC1101BM2-025.0000T
DSC1101BM2-100.0000T
DSC1101BM2-074.2500T
DSC1101BM2-027.0000T
DSC1101BM2-050.0000T
DSC1101BM2-054.0000T
DSC1101AM2-014.3950T
DSC1101AM2-030.0000T
DSC1101DM1-033.3330T
DSC1101DM2-020.0000T
DSC1101DM2-016.0000T
DSC1101DM2-056.2500T
DSC1101DM2-125.0000T
DSC1101DM2-004.0000T
DSC1101DM1-012.0000T
DSC1101DM2-012.0000T
DSC1101DM1-033.3333T
DSC1101DM2-033.3333T
DSC1101DM2-008.0000T
DSC1101DM2-024.0000T

DSC1101DM1-080.0000T
DSC1101DM2-007.3700T
DSC1101DM1-032.0000T
DSC1101DM1-007.3700T
DSC1101DM2-040.0000T
DSC1101DM2-048.0000T
DSC1101DM1-020.0000T
DSC1121CM1-016.0000
DSC1121CM1-024.0000
DSC1121CM1-025.0000
DSC1121CM1-026.5625
DSC1121CM1-027.0000
DSC1121CM1-050.0000
DSC1121CM1-075.0000
DSC1121CM2-033.3333
DSC1121CM2-024.5454
DSC1121CM2-027.0000
DSC1121CM2-062.2080
DSC1121CM2-040.0000
DSC1121CM2-006.7800
DSC1121CM1-012.0000
DSC1121CM1-012.2880
DSC1121CM1-040.0000
DSC1121CM1-066.6660
DSC1121CM1-100.0000
DSC1121CM1-036.0000
DSC1121CM1-018.0000
DSC1121CM2-008.0000
DSC1121CM2-025.0000
DSC1121CM1-030.0000
DSC1121CM1-014.7456
DSC1121CM1-032.0000
DSC1121CM2-003.1152
DSC1121CM1-003.1152
DSC1121CM1-005.5296
DSC1121CM2-024.0000
DSC1121BM1-008.0000
DSC1121BM1-025.0000
DSC1121BM1-030.0000
DSC1121BM1-048.0000
DSC1121BM1-100.0000
DSC1121BM2-007.3728
DSC1121BM1-010.0000
DSC1121BM1-024.0000
DSC1121BM1-050.0000
DSC1121BM2-016.0000
DSC1121BM2-030.0000

DSC1121BM1-024.5760
DSC1121BM1-060.0000
DSC1121BM1-016.0000
DSC1121BM1-026.0000
DSC1121BM1-012.2880
DSC1121BM2-131.0720
DSC1121BM2-020.0000
DSC1121BM2-025.0000
DSC1121BM2-032.0000
DSC1121BM1-032.0000
DSC1121BM1-014.7456
DSC1121BM1-005.5296
DSC1121AM2-004.0000
DSC1121AM2-010.0000
DSC1121AM2-016.0000
DSC1121AM2-024.0000
DSC1121AM2-024.5760
DSC1121AM2-025.0000
DSC1121AM2-027.0000
DSC1121AM2-033.3330
DSC1121AM2-050.0000
DSC1121AM2-066.6660
DSC1121AM2-125.0000
DSC1121AM1-100.0000
DSC1121AM2-008.0000
DSC1121AM1-010.0000
DSC1121AM1-020.0000
DSC1121AM1-027.0000
DSC1121AM1-012.2880
DSC1121AM1-032.7680
DSC1121AM1-014.7456
DSC1121AM1-041.5000
DSC1121AM2-041.5000
DSC1121DM2-007.3728
DSC1121DM2-125.0000
DSC1121DM1-033.3333
DSC1121DM1-030.0000
DSC1121DM2-025.0000
DSC1121DM2-033.0000
DSC1121DM2-016.6400
DSC1121DM2-014.7456
DSC1121DM3-032.0000
DSC1121DM2-026.0000
DSC1121DM2-019.2000
DSC1121CI2-014.7456
DSC1121CI1-024.0000
DSC1121CI1-025.0000

DSC1121CI2-024.0000
DSC1121CI2-025.0000
DSC1121CI2-031.2500
DSC1121CI2-066.6660
DSC1121CI2-050.0000
DSC1121CI2-100.0000
DSC1121CI2-115.0000
DSC1121CI2-125.0000
DSC1121CI2-132.0000
DSC1121CI2-168.0000
DSC1121CI5-016.0000
DSC1121CI5-022.5000
DSC1121CI5-040.0000
DSC1121CI5-045.0000
DSC1121CI5-049.1520
DSC1121CI2-024.5760
DSC1121CI2-020.0000
DSC1121CL2-040.0000
DSC1121CI1-050.0000
DSC1121CI5-016.6667
DSC1121CI5-025.0000
DSC1121CI5-027.0000
DSC1121CI5-066.0000
DSC1121CI5-117.0000
DSC1121CI2-027.0000
DSC1121CI2-066.6667
DSC1121CI2-155.5200
DSC1121CI2-008.0000
DSC1121CI5-026.0000
DSC1121CI2-080.0000
DSC1121CI2-045.1580
DSC1121CI2-049.1520
DSC1121CI2-045.1584
DSC1121CI2-014.3181
DSC1121CI5-045.1584
DSC1121CI5-024.0000
DSC1121CI2-066.0000
DSC1121BI2-025.0000
DSC1121BI2-050.0000
DSC1121BI2-080.0000
DSC1121BI2-012.2880
DSC1121BI2-025.0007
DSC1121BI2-156.2540
DSC1121BI2-100.0000
DSC1121BI2-125.0000
DSC1121BI2-022.5792
DSC1121BI2-114.2850

DSC1121BI2-024.5760
DSC1121BI2-033.3330
DSC1121BI1-008.0000
DSC1121BI2-156.2500
DSC1121BI2-016.3840
DSC1121BI2-020.0000
DSC1121BI2-131.0720
DSC1121BI2-008.0000
DSC1121BI5-022.5792
DSC1121BI5-024.5760
DSC1121BI3-100.0000
DSC1121BI5-024.0000
DSC1121BI2-012.0000
DSC1121BI5-045.1854
DSC1121BI5-049.1520
DSC1121BI1-020.0000
DSC1121BI5-125.0000
DSC1121BI5-025.6000
DSC1121BI2-040.6800
DSC1121AI2-156.2500
DSC1121AI1-025.0000
DSC1121AI1-125.0000
DSC1121AI2-025.0000
DSC1121AI2-026.0000
DSC1121AI2-050.0000
DSC1121AI2-125.0000
DSC1121AI5-020.0000
DSC1121AI5-050.0000
DSC1121AI5-125.0032
DSC1121AI2-150.0000
DSC1121AI2-148.5000
DSC1121AI2-020.0000
DSC1121AI1-027.0000
DSC1121AI2-162.0000
DSC1121AI2-012.2880
DSC1121AI5-100.0000
DSC1121AI5-027.0000
DSC1121AI2-010.0000
DSC1121AI2-061.4400
DSC1121AI2-013.0000
DSC1121AI3-025.0000
DSC1121AI5-022.5792
DSC1121AI2-008.0000
DSC1121AI2-016.0000
DSC1121AI2-066.6660
DSC1121AI2-033.3330
DSC1121AI1-156.2500

DSC1121AI1-090.0000
DSC1121AI5-008.0000
DSC1121AI2-159.3750
DSC1121AI2-053.1250
DSC1121AI2-081.0000
DSC1121AI2-041.5000
DSC1121AI5-041.5000
DSC1121AI1-041.5000
DSC1121NI2-018.4320
DSC1121NI1-100.0000
DSC1121NI2-125.0000
DSC1121NI2-025.0000
DSC1121DI2-024.0000
DSC1121DI1-036.0000
DSC1121DI1-025.0000
DSC1121DI2-011.0590
DSC1121DI2-022.5792
DSC1121DI2-024.5760
DSC1121DI2-027.0000
DSC1121DI2-125.0000
DSC1121DI5-034.3680
DSC1121DI5-044.0000
DSC1121DI5-044.7360
DSC1121DI2-025.0000
DSC1121DI5-010.0000
DSC1121DI1-026.6000
DSC1121DI5-008.0000
DSC1121DI2-156.2500
DSC1121DI5-100.0000
DSC1121DI5-072.0000
DSC1121DI5-050.0000
DSC1121DI5-032.0000
DSC1121DI1-100.0000
DSC1121DI2-010.0000
DSC1121DI3-050.0000
DSC1121DI2-100.0000
DSC1121CE1-016.0000
DSC1121CE1-025.0012
DSC1121CE5-012.2880
DSC1121CE5-024.5670
DSC1121CE2-025.0000
DSC1121CL2-024.7500
DSC1121CL2-025.0000
DSC1121CL2-050.0000
DSC1121CL5-050.0000
DSC1121CE1-133.3333
DSC1121CE5-050.0000

DSC1121CE1-125.0000
DSC1121CL5-150.0000
DSC1121CE1-033.3333
DSC1121CE5-033.3333
DSC1121CL1-024.0000
DSC1121CL1-028.6364
DSC1121CL1-027.0000
DSC1121CE1-025.6000
DSC1121CL5-040.0000
DSC1121CL5-080.0000
DSC1121CL5-033.3333
DSC1121CE5-002.4880
DSC1121CL1-050.0000
DSC1121CE1-030.0000
DSC1121CE2-030.0000
DSC1121CE5-025.0000
DSC1121CL5-027.0000
DSC1121CE1-124.2000
DSC1121CL2-020.5710
DSC1121CL5-125.0000
DSC1121CL2-024.0000
DSC1121CL5-003.3000
DSC1121BE2-100.0000
DSC1121BE5-025.0000
DSC1121BE2-155.5200
DSC1121BL5-108.7200
DSC1121BL5-110.5400
DSC1121BE5-024.0000
DSC1121BL5-012.0000
DSC1121BL3-016.0000
DSC1121BL3-012.2880
DSC1121BE5-144.0800
DSC1121BL5-025.0000
DSC1121AE1-024.0000
DSC1121AE1-156.2500
DSC1121AE2-025.0000
DSC1121AE2-156.2500
DSC1121AL2-020.0000
DSC1121AL2-025.0000
DSC1121AE1-025.0000
DSC1121AL5-010.0000
DSC1121AL5-100.0000
DSC1121AE5-010.0000
DSC1121AL5-112.2400
DSC1121AE5-022.5792
DSC1121AE5-024.5760
DSC1121AE1-040.0000

DSC1121AL5-170.0000
DSC1121AL5-024.5760
DSC1121AL5-022.5792
DSC1121AL5-125.0000
DSC1121AE5-012.0000
DSC1121AE1-010.0000
DSC1121AE5-005.2500
DSC1121AE2-004.9152
DSC1121AE2-133.0000
DSC1121AL5-041.5000
DSC1121AE2-041.5000
DSC1121AE5-041.5000
DSC1121AL2-041.5000
DSC1121AL1-041.5000
DSC1121AE1-041.5000
DSC1121AE1-004.0000
DSC1121NL1-025.0000
DSC1121DL2-024.7500
DSC1121DL2-025.0000
DSC1121DL2-008.0000
DSC1121DL2-032.0000
DSC1121DE1-050.0000
DSC1121DL5-026.0000
DSC1121DL1-025.0000
DSC1121DL1-033.0000
DSC1121DE2-025.0000
DSC1121DL2-072.0000
DSC1121DL1-040.0000
DSC1121DL5-072.0000
DSC1121DE5-072.0000
DSC1121DE1-010.0000
DSC1121DE3-150.3330
DSC1121CE1-016.0000T
DSC1121CE1-025.0000T
DSC1121CE1-025.0012T
DSC1121CE1-075.0000T
DSC1121CE2-025.0000T
DSC1121CE2-100.0000T
DSC1121CL2-025.0000T
DSC1121CL2-050.0000T
DSC1121CL5-024.0000T
DSC1121CL5-048.0000T
DSC1121CE1-133.3333T
DSC1121CE5-050.0000T
DSC1121CL5-050.0000T
DSC1121CE1-125.0000T
DSC1121CL5-150.0000T

DSC1121CE1-033.3333T
DSC1121CE5-033.3333T
DSC1121CL1-024.0000T
DSC1121CL1-028.6364T
DSC1121CL1-027.0000T
DSC1121CE1-025.6000T
DSC1121CL5-040.0000T
DSC1121CL5-080.0000T
DSC1121CL5-033.3333T
DSC1121CE5-002.4880T
DSC1121CL1-050.0000T
DSC1121CE1-030.0000T
DSC1121CE2-030.0000T
DSC1121CE5-025.0000T
DSC1121CL5-027.0000T
DSC1121CE1-124.2000T
DSC1121CL2-020.5710T
DSC1121CL5-125.0000T
DSC1121CL2-024.0000T
DSC1121CL5-003.3000T
DSC1121BE2-100.0000T
DSC1121BE2-155.5200T
DSC1121BL5-108.7200T
DSC1121BL5-110.5400T
DSC1121BE5-024.0000T
DSC1121BL5-012.0000T
DSC1121BL3-016.0000T
DSC1121BL3-012.2880T
DSC1121BE5-144.0800T
DSC1121BL5-025.0000T
DSC1121AE1-075.0000T
DSC1121AE1-125.0000T
DSC1121AE2-020.0000T
DSC1121AE2-025.0000T
DSC1121AE2-075.0000T
DSC1121AE2-156.2500T
DSC1121AE1-025.0000T
DSC1121AL5-010.0000T
DSC1121AL5-100.0000T
DSC1121AE5-010.0000T
DSC1121AL5-112.2400T
DSC1121AE5-022.5792T
DSC1121AE5-024.5760T
DSC1121AE1-040.0000T
DSC1121AL5-170.0000T
DSC1121AL5-024.5760T
DSC1121AL5-022.5792T

DSC1121AL5-125.0000T
DSC1121AE5-012.0000T
DSC1121AE1-010.0000T
DSC1121AE5-005.2500T
DSC1121AE2-004.9152T
DSC1121AE2-133.0000T
DSC1121AL5-041.5000T
DSC1121AE2-041.5000T
DSC1121AE5-041.5000T
DSC1121AL2-041.5000T
DSC1121AL1-041.5000T
DSC1121AE1-041.5000T
DSC1121AE1-004.0000T
DSC1121NL1-025.0000T
DSC1121DL2-024.7500T
DSC1121DL2-025.0000T
DSC1121DL2-008.0000T
DSC1121DL2-032.0000T
DSC1121DE1-050.0000T
DSC1121DL5-026.0000T
DSC1121DL1-025.0000T
DSC1121DL1-033.0000T
DSC1121DE2-025.0000T
DSC1121DL2-072.0000T
DSC1121DL1-040.0000T
DSC1121DL5-072.0000T
DSC1121DE5-072.0000T
DSC1121DE1-010.0000T
DSC1121DE3-150.3330T
DSC1121CI2-014.7456T
DSC1121CI1-024.0000T
DSC1121CI1-125.0000T
DSC1121CI2-010.0000T
DSC1121CI2-012.2880T
DSC1121CI2-013.0000T
DSC1121CI2-024.0000T
DSC1121CI2-025.0000T
DSC1121CI1-025.0000T
DSC1121CI2-048.0000T
DSC1121CI2-050.0000T
DSC1121CI2-060.0000T
DSC1121CI2-066.6660T
DSC1121CI2-100.0000T
DSC1121CI2-125.0000T
DSC1121CI2-133.3330T
DSC1121CI2-148.5000T
DSC1121CI5-040.0000T

DSC1121CI5-049.1520T
DSC1121CI2-024.5760T
DSC1121CI2-020.0000T
DSC1121CI2-030.0000T
DSC1121CI2-051.8400T
DSC1121CL2-040.0000T
DSC1121CI1-050.0000T
DSC1121CI5-016.6667T
DSC1121CI5-025.0000T
DSC1121CI5-027.0000T
DSC1121CI5-066.0000T
DSC1121CI5-117.0000T
DSC1121CI2-027.0000T
DSC1121CI5-016.0000T
DSC1121CI2-012.0000T
DSC1121CI2-066.6667T
DSC1121CI2-155.5200T
DSC1121CI2-008.0000T
DSC1121CI5-026.0000T
DSC1121CI2-080.0000T
DSC1121CI2-045.1580T
DSC1121CI2-049.1520T
DSC1121CI2-045.1584T
DSC1121CI2-014.3181T
DSC1121CI5-045.1584T
DSC1121CI5-024.0000T
DSC1121CI2-066.0000T
DSC1121CM1-027.0000T
DSC1121BI2-013.0000T
DSC1121BI2-025.0000T
DSC1121BI2-050.0000T
DSC1121BI2-120.0000T
DSC1121BI2-125.0037T
DSC1121BI2-150.0000T
DSC1121BI2-080.0000T
DSC1121BI2-012.2880T
DSC1121BI2-025.0007T
DSC1121BI2-156.2540T
DSC1121BI2-048.0000T
DSC1121BI2-100.0000T
DSC1121BI2-125.0000T
DSC1121BI2-022.5792T
DSC1121BI2-114.2850T
DSC1121BI2-024.5760T
DSC1121BI2-033.3330T
DSC1121BI1-008.0000T
DSC1121BI2-156.2500T

DSC1121BI2-016.3840T
DSC1121BI2-020.0000T
DSC1121BI2-131.0720T
DSC1121BI2-008.0000T
DSC1121BI5-022.5792T
DSC1121BI5-024.5760T
DSC1121BI3-100.0000T
DSC1121BI5-024.0000T
DSC1121BI2-012.0000T
DSC1121BI5-045.1854T
DSC1121BI5-049.1520T
DSC1121BI1-020.0000T
DSC1121BI5-125.0000T
DSC1121BI5-025.6000T
DSC1121BI5-125.0000B
DSC1121BI2-040.6800T
DSC1121AI2-156.2500T
DSC1121AE1-024.0000T
DSC1121AI1-025.0000T
DSC1121AI2-024.0000T
DSC1121AI2-025.0000T
DSC1121AI2-026.0000T
DSC1121AI2-029.4912T
DSC1121AI2-048.0000T
DSC1121AI2-050.0000T
DSC1121AI2-125.0000T
DSC1121AI1-155.5200T
DSC1121AI2-156.2540T
DSC1121AI5-020.0000T
DSC1121AI2-150.0000T
DSC1121AI2-148.5000T
DSC1121AI2-020.0000T
DSC1121AI1-027.0000T
DSC1121AI2-162.0000T
DSC1121AI2-012.2880T
DSC1121AI5-100.0000T
DSC1121AI5-027.0000T
DSC1121AI2-010.0000T
DSC1121AI2-061.4400T
DSC1121AI2-013.0000T
DSC1121AI3-025.0000T
DSC1121AI5-022.5792T
DSC1121AI2-008.0000T
DSC1121AI2-016.0000T
DSC1121AI2-066.6660T
DSC1121AI2-033.3330T
DSC1121AI1-156.2500T

DSC1121AI1-090.0000T
DSC1121AI5-008.0000T
DSC1121AI2-159.3750T
DSC1121AI2-053.1250T
DSC1121AI2-081.0000T
DSC1121AI2-041.5000T
DSC1121AI5-041.5000T
DSC1121AI1-041.5000T
DSC1121NI1-100.0000T
DSC1121NI2-125.0000T
DSC1121NI2-025.0000T
DSC1121DI2-024.0000T
DSC1121DI1-036.0000T
DSC1121DI1-125.0000T
DSC1121DI5-034.3680T
DSC1121DI2-025.0000T
DSC1121DI2-125.0000B
DSC1121DI2-125.0000T
DSC1121DI5-010.0000T
DSC1121DI1-026.6000T
DSC1121DI2-156.2500T
DSC1121DI5-100.0000T
DSC1121DI5-072.0000T
DSC1121DI5-050.0000T
DSC1121DI5-032.0000T
DSC1121DI1-100.0000T
DSC1121DI2-010.0000T
DSC1121DI3-050.0000T
DSC1121DI2-100.0000T
DSC1121CM1-010.0000T
DSC1121CM1-016.0000T
DSC1121CM1-020.0000T
DSC1121CM1-024.0000T
DSC1121CM1-025.0000T
DSC1121CM1-048.0000T
DSC1121CM1-050.0000T
DSC1121CM1-075.0000T
DSC1121CM1-125.0000T
DSC1121CM2-033.3333T
DSC1121CM2-027.0000T
DSC1121CM2-040.0000T
DSC1121CM2-006.7800T
DSC1121CM1-012.0000T
DSC1121CM1-012.2880T
DSC1121CM1-040.0000T
DSC1121CM1-066.6660T
DSC1121CM1-100.0000T

DSC1121CM1-036.0000T
DSC1121CM1-018.0000T
DSC1121CM2-008.0000T
DSC1121CM2-025.0000T
DSC1121CM1-030.0000T
DSC1121CM1-014.7456T
DSC1121CM1-032.0000T
DSC1121CM2-003.1152T
DSC1121CM1-003.1152T
DSC1121CM1-005.5296T
DSC1121CM2-024.0000T
DSC1121BM1-008.0000T
DSC1121BM1-025.0000T
DSC1121BM1-027.0000T
DSC1121BM1-030.0000T
DSC1121BM1-048.0000T
DSC1121BM1-100.0000T
DSC1121BM1-010.0000T
DSC1121BM1-024.0000T
DSC1121BM1-050.0000T
DSC1121BM2-016.0000T
DSC1121BM2-030.0000T
DSC1121BM1-024.5760T
DSC1121BM1-060.0000T
DSC1121BM1-016.0000T
DSC1121BM1-026.0000T
DSC1121BM1-012.2880T
DSC1121BM2-131.0720T
DSC1121BM2-020.0000T
DSC1121BM2-025.0000T
DSC1121BM2-032.0000T
DSC1121BM1-032.0000T
DSC1121BM1-014.7456T
DSC1121BM1-005.5296T
DSC1121AM1-025.0000T
DSC1121AM1-030.0000T
DSC1121AM1-050.0000T
DSC1121AM2-027.0000T
DSC1121AM2-125.0000T
DSC1121AM1-010.0000T
DSC1121AM1-020.0000T
DSC1121AM1-027.0000T
DSC1121AM1-012.2880T
DSC1121AM1-032.7680T
DSC1121AM1-014.7456T
DSC1121AM1-041.5000T
DSC1121AM2-041.5000T

DSC1121DM2-003.3333T
DSC1121DM2-125.0000T
DSC1121DM1-033.3333T
DSC1121DM1-030.0000T
DSC1121DM2-025.0000T
DSC1121DM2-033.0000T
DSC1121DM2-016.6400T
DSC1121DM2-014.7456T
DSC1121DM3-032.0000T
DSC1121DM2-026.0000T
DSC1121DM2-019.2000T