Product Change Notification - SYST-30AXGZ143

Date:

02 May 2019

Product Category:

Bluetooth Module

Affected CPNs:

Notification subject:

Data Sheet - RN4870/71 Bluetooth Low Energy Module Data Sheet

Notification text:

SYST-30AXGZ143

Microchip has released a new DeviceDoc for the RN4870/71 Bluetooth Low Energy Module Data Sheet of devices. If you are using one of these devices please read the document located at RN4870/71 Bluetooth Low Energy Module Data Sheet.

Notification Status: Final

Description of Change: 1) Updated Bluetooth version from 4.2 to 5.0. 2) Updated Features and Antenna Options. 3) Updated Figure 5-2, Figure 5-3, Figure 5-4, and Figure 5-5. 4) Updated Figure 9-1 and Figure 9-2 (P2_0 = 1) 5) Updated Section 7.0 Supported Services. 6) Updated Section 10.2 Canada and Section 10.3 Europe.

Impacts to Data Sheet: None

Reason for Change: To Improve Manufacturability

Change Implementation Status: Complete

Date Document Changes Effective: 02 May 2019

NOTE: Please be advised that this is a change to the document only the product has not been changed.

Markings to Distinguish Revised from Unrevised Devices: N/A

Attachment(s):

RN4870/71 Bluetooth Low Energy Module Data Sheet

Please contact your local Microchip sales office with questions or concerns regarding this notification.

Terms and Conditions:

If you wish to receive Microchip PCNs via email please register for our PCN email service at our PCN home page select register then fill in the required fields. You will find instructions about registering for Microchips PCN email service in the PCN FAQ section.
If you wish to change your PCN profile, including opt out, please go to the PCN home page select login and sign into your myMicrochip account. Select a profile option from the left navigation bar and make the applicable selections.

RN4870/71

Bluetooth® Low Energy Module

Features

- Qualified for Bluetooth SIG v5.0 Core Specification
- Certified to FCC, ISED, CE, KCC, NCC and SRRC
- On-Board Bluetooth Low Energy (BLE) Stack
- ASCII Command Interface API over UART
- Scripting Engine for Hostless Operation
- Compact Form Factor – The RN4870/71 family comes in four different sizes from 6 mm x 8 mm to 12 mm x 22 mm:
  - RN4870: 12 mm x 22 mm
  - RN4871: 9 mm x 11.5 mm
  - RN4870U: 12 mm x 15 mm
  - RN4871U: 6 mm x 8 mm
- Beacon Private Service for Beacon Services
- UART Transparent Service for Serial Data Applications
- Remote Configuration Over-the-Air

Operational

- Operating Voltage: 1.9V to 3.6V (3.3V typical)
- Temperature Range:
  - -20°C to +70°C (Normal)
  - -40°C to +85°C (Industrial)
- Supports UART
- Up to Three Pulse Width Modulation (PWM) Outputs (only for RN4870)

RF/Analog Features

- ISM Band 2.402 to 2.480 GHz Operation
- Channels: 0-39
- RX Sensitivity: -90 dBm
- TX Power: 0 dBm
- RSSI Monitor

MAC/Baseband/Higher Layer Features

- Secure AES128 Encryption
- GAP, GATT, SM, L2CAP and Integrated Public Profiles
- Customer Can Create up to Five Public and Four Private Services
- Keyboard I/O Authentication
- Software Configurable Role as Peripheral or Central and Client or Server

Antenna Options

- Chip Antenna Range based on Open Air Measurements and Phone-Module Connection:
  - RN4870: Up to 50 m
  - RN4871: Up to 10 m
- External Antenna Connection via RF Pad (RN4870U/RN4871U)

Applications

- Health/Medical Devices
- Sports Activity/Fitness Meters
- Beacon Applications
- Internet of Things (IoT) Sensor Tag
- Remote Control
- Wearable Smart Devices and Accessories
- Smart Energy/Smart Home
- Industrial Control

© 2016-2019 Microchip Technology Inc.

Table of Contents

1.0 Device Overview 3
2.0 Specifications 11
3.0 Interface PINs 13
4.0 Physical Dimensions And Attributes 15
5.0 Application Reference Circuits 25
6.0 ASCII Command API 29
7.0 Supported Services 31
8.0 Antenna Characteristics 33
9.0 Timing Characteristics 35
10.0 Regulatory Approval 37
11.0 Ordering Information 45
The Microchip WebSite 47
Customer Change Notification Service 47
Customer Support 47
Product Identification System 49

TO OUR VALUED CUSTOMERS

It is our intention to provide our valued customers with the best documentation possible to ensure successful use of your Microchip products. To this end, we will continue to improve our publications to better suit your needs. Our publications will be refined and enhanced as new volumes and updates are introduced.

If you have any questions or comments regarding this publication, please contact the Marketing Communications Department via E-mail at **docerrors@microchip.com**. We welcome your feedback.

Most Current Data Sheet

To obtain the most up-to-date version of this data sheet, please register at our Worldwide Web site at:

http://www.microchip.com

You can determine the version of a data sheet by examining its literature number found on the bottom outside corner of any page. The last character of the literature number is the version number, (e.g., DS30000000A is version A of document DS30000000).

Errata

An errata sheet, describing minor operational differences from the data sheet and recommended workarounds, may exist for current devices. As device/documentation issues become known to us, we will publish an errata sheet. The errata will specify the revision of silicon and revision of document to which it applies.

To determine if an errata sheet exists for a particular device, please check with one of the following:

- Microchip's Worldwide Web site; **http://www.microchip.com**
- Your local Microchip sales office (see last page)

When contacting a sales office, please specify which device, revision of silicon and data sheet (include literature number) you are using.

Customer Notification System

Register on our web site at **www.microchip.com** to receive the most current information on all of our products.

© 2016-2019 Microchip Technology Inc.

1.0 DEVICE OVERVIEW

1.1 Overview

The RN4870/71 BLE module integrates Bluetooth 5.0 baseband controller, on-board Bluetooth stack, digital and analog I/O, and RF power amplifier into one solution.

Table 1-1 shows the various options for packaging and features available in the RN4870/71 family. Table 1-2 provides the description of the pin functions for all the modules in the RN4870/71 family. Figure 1-1 through Figure 1-4 show the pinout for the different modules.

TABLE 1-1: RN4870/71 FAMILY

Part Number(1)	Antenna On-Board	Shielding	Number of Pins	Dimensions	Operating Temperature Range
RN4870-V/RMXXX	Yes	Yes	33	12 mm x 22 mm	-20°C to +70°C
RN4870U-V/RMXXX	No	No	30	12 mm x 15 mm	-20°C to +70°C
RN4871-V/RMXXX	Yes	Yes	16	9 mm x 11.5 mm	-20°C to +70°C
RN4871U-V/RMXXX	No	No	17	6 mm x 8 mm	-20°C to +70°C
RN4870-I/RMXXX	Yes	Yes	33	12 mm x 22 mm	-40°C to +85°C
RN4871-I/RMXXX	Yes	Yes	16	9 mm x 11.5 mm	-40°C to +85°C

Note 1: The last three digits in P/N indicate the firmware version. At the time of publication, the latest firmware version is 1.28. Ensure to check product webpage for latest part number and firmware version.

TABLE 1-2: PIN DESCRIPTION

RN4870U	RN4870	RN4871U	RN4871	Name	Type	Description
—	1	—	—	GND	Power	Ground reference
—	2	—	—	GND	Power	Ground reference
1	3	12	13	GND	Power	Ground reference
2	4	11	14	VBAT	Power	Positive supply input. Range: 1.9V~3.6V
—	—	10	—	BK_IN	Power	Buck power supply input Can be connected to the VBAT pin Connect to 10 µF low ESR ceramic capacitor Voltage range: 1.9V to 3.6V
3	5	—	—	P2_2	D I/O	GPIO PWM1 (only for RN4870) Default: Input; pulled-high
4	6	—	—	VDD_IO	Power	VDD; power input Same input pin as VBAT Can be connected to the VBAT pin
5	7	—	—	VDD_IO	Power	VDD; power input Same input pin as VBAT Can be connected to the VBAT pin
6	8	—	—	ULPC_O	Power	1.2V ULPC LDO output Used for diagnostic purposes *Do not connect* to any pin or device For measurement, connect a bypass 1 µF capacitor to ground
7	9	—	—	P2_3	D I/O	GPIO PWM2 (only for RN4870) Default: Input; pulled-high
8	10	—	—	BK_O	Power	1.55V Buck power supply output for diagnostic purpose *Do not connect*

TABLE 1-2: PIN DESCRIPTION (CONTINUED)

RN4870U	RN4870	RN4871U	RN4871	Name	Type	Description
—	—	13	6	P1_6	D	Configurable pin. Refer to **Section 1.2 "Module Configuration"** for details. When connected to host MCU, set the pin connected to pin P1_6 in either high impedance or drive pin low during firmware start-up (approximately 22 msec).
—	—	14	5	P1_7	D	Configurable pin. Refer to **Section 1.2 "Module Configuration"** for details.
9	11	15	15	P2_7	D O/p	UART_TX_IND output pin. Provides indication if RN4870 is transmitting to host MCU over UART. Pulled low before UART TX begins and pulled high after UART TX is over.
10	12	—	—	P1_1	D I/O A I/p	GPIO; default: Input; pulled-high AD9 Configured as the BLEDK_STATUS1_IND pin by default
11	13	2	3	P1_2	D I/O A I/p	GPIO; default: Input; pulled-high AD10; I^2C SCL pin
12	14	3	4	P1_3	D I/O	GPIO; default: Input; pulled-high AD11; I^2C SDA pin
13	15	8	11	P0_0	D I/O	GPIO; default: Input; pulled-high AD0 Configured as the UART_CTS pin by default
14	16	—	—	P1_0	D I/O	GPIO; default: Input; pulled-high AD8 Configured as the BLEDK_STATUS2_IND pin by default
15	17	6	9	P3_6	D I/O	GPIO; default: Input; pulled-high (only for RN4870) Configured as the UART_RTS pin by default
16	18	16	16	P2_0	D I/p	System configuration input; 1: Application mode 0: Test mode/Flash update/EEPROM configuration Default: Input; pulled-high
17	19	—	—	P2_4	D I/O	GPIO; default: Input; pulled-high
18	20	—	—	NC	—	No Connection
19	21	7	10	RST_N	D I/p	Module Reset; active-low; Internally pulled-high
20	22	5	7	UART_RX	D I/p	UART Data input
21	23	4	8	UART_TX	D O/p	UART Data output
22	24	—	—	P3_1	D I/O	GPIO; default: Input; pulled-high Configured as RSSI_IND pin by default; SPI NCS Bus
23	25	—	—	P3_2	D I/p	GPIO; default: Input; pulled-high Configured as the LINK_DROP pin by default; SPI MISO pin
24	26	—	—	P3_3	D I/p	GPIO; default: Input; pulled-high Configured as the UART RX Indication pin by default; SPI MOSI pin
25	27	—	—	P3_4	D I/p	GPIO; default: Input; pulled-high Configured as the PAIRING_KEY pin by default; SPI SCLK pin

© 2016-2019 Microchip Technology Inc.

TABLE 1-2: PIN DESCRIPTION (CONTINUED)

RN4870U	RN4870	RN4871U	RN4871	Name	Type	Description
26	28	—	—	P3_5	D I/O A I/p	GPIO; default: Input; pulled-high LED1; provides indication whether the module is ON/OFF
27	29	—	—	P0_7	D I/O	GPIO; default: Input; pulled-high Configured to the LOW_BATTERY_INDICATOR pin by default
28	30	9	12	P0_2	D I/O	AD2 LED0: Provides indication whether the module is in ON/OFF mode
29	31	17	2	GND	Power	Ground Reference
—	32	—	—	GND	Power	Ground Reference
30	—	1	—	BT_RF	A I/O	External Antenna connection (50 ohms). Only for RN4870U and RN4871U. No connection for RN4871.
—	33	—	—	GND	Power	Ground Reference

Legend: Pin Type Abbreviations: A = Analog D = Digital I/O = Input/Output I/p = Input O/p = Output

FIGURE 1-1: PIN DIAGRAM - RN4870U

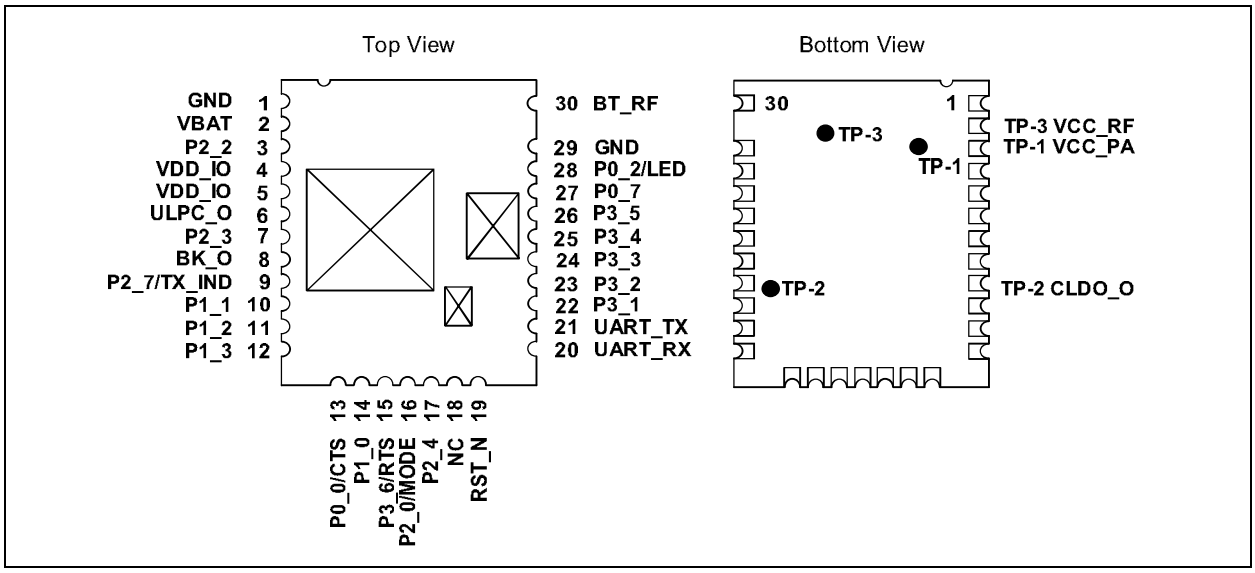

FIGURE 1-2: PIN DIAGRAM - RN4870

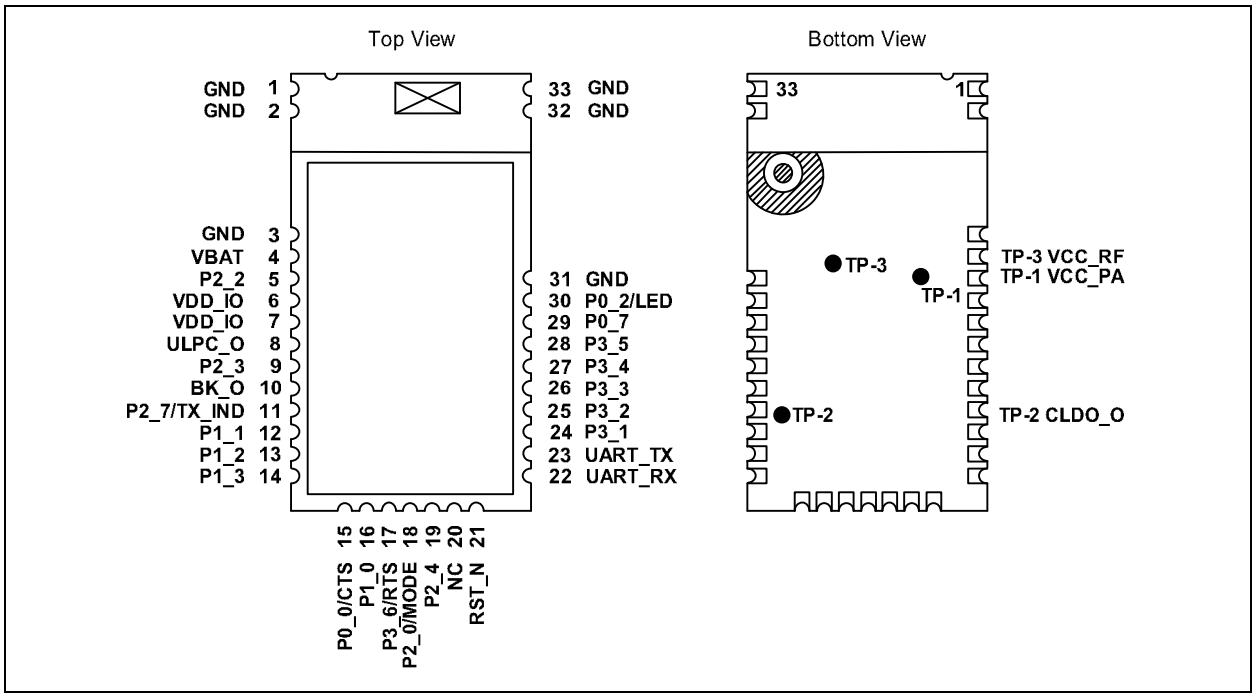

FIGURE 1-3: PIN DIAGRAM - RN4871U

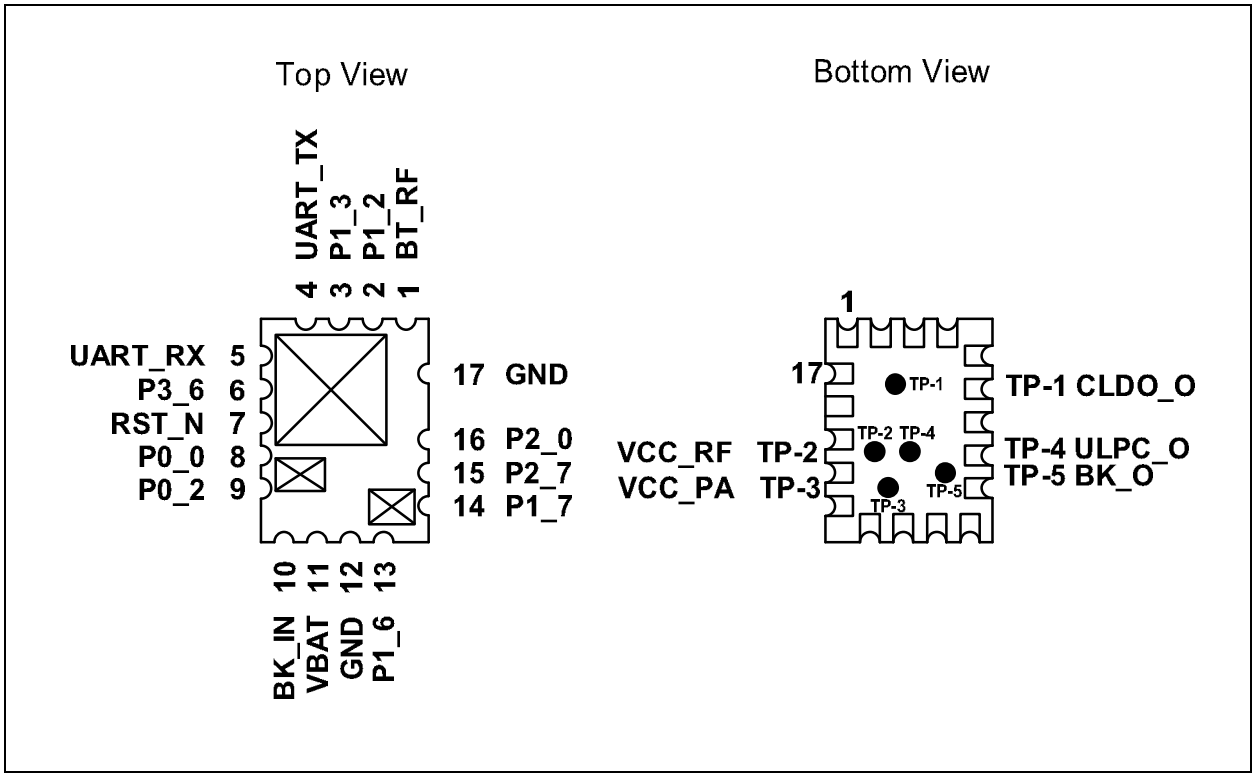

© 2016-2019 Microchip Technology Inc.

FIGURE 1-4: PIN DIAGRAM - RN4871

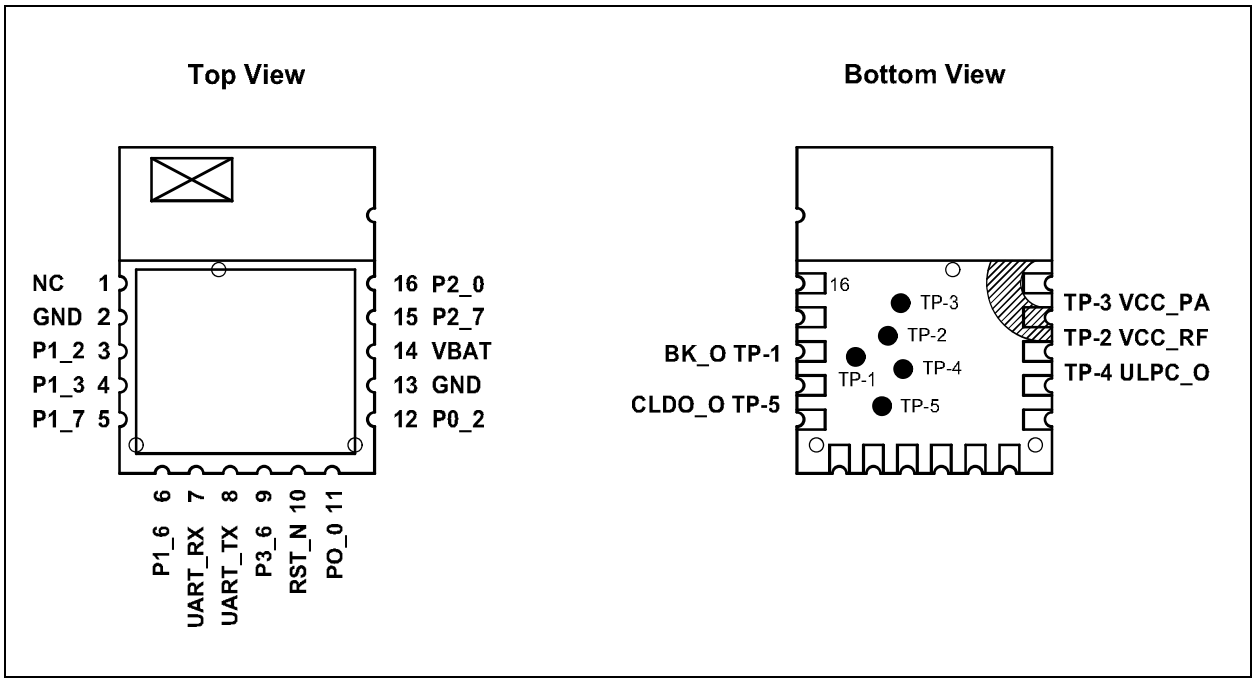

1.2 Module Configuration

The GPIO pins of the RN4870 and RN4871 modules can be configured to different functions using the ASCII command interface. Table 1-3 shows the various pins in the RN4870/71 module that are available for configuration and their default configuration settings. Table 1-4 provides details on each available function. Table 1-5 shows the status of the module as indicated by the Status 1 and Status 2 indication pins. Table 1-6 shows the details of test pads that are present on the bottom side of the module, used for diagnostic purposes during testing. Figure 1-5 shows all the key elements of the module.

TABLE 1-3: CONFIGURABLE PINS AND DEFAULT FUNCTIONS IN THE RN4870 AND RN4871

Pin Name	Available in		Default Function
	RN4870	RN4871	
P0_7	x	—	Low Battery Indication
P1_0	x	—	Status 2
P1_1	x	—	Status 1
P2_2	x	—	None
P2_4	x	—	None
P3_1	x	—	RSSI Indication
P3_2	x	—	Link Drop
P3_3	x	—	UART RX Indication
P3_4	x	—	Pairing Key
P3_5	x	—	None
P1_2	x	x	None
P1_3	x	x	None
P1_6	—	x	UART RX Indication
P1_7	—	x	None

TABLE 1-4: CONFIGURABLE FUNCTIONS AND DESCRIPTIONS

Function Name	Description
Low Battery Indication	Pin output goes low when the VDD is below a specified level. To set the threshold level, change the EEPROM settings.
Status 1	Use this indication pin along with the Status 2 pin to indicate the current status of the module. Refer to Table 1-5 for details of the status indication.
Status 2	Use this indication pin along with the Status 1 pin to indicate the current status of the module. Refer to Table 1-5 for details of the status indication.
RSSI Indication	Use this indication pin to indicate the quality of the link based on the RSSI level. If the RSSI level is lower than the specified threshold value, then the RSSI indication pin goes low. Set the threshold for the RSSI link quality in EEPROM.
Link Drop	When the RN4870/71 is connected to a remote device, the host MCU can use the Link Drop pin to force the module to disconnect the link and enter Shutdown state. The pin needs to be pulled low for at least 10 ms.
UART RX Indication	Use this pin to enable communication with the UART when the module is in Low-Power mode. When *not* in Low-Power mode, the module runs on a 16 MHz clock. If Low-Power mode is enabled on the module by using command `SO,1`, the module runs on a 32 kHz clock thus reducing power consumption. However, in Low-Power mode, the host MCU *cannot* communicate with the module via the UART since the UART is *not* operational. If the user intends to provide data or commands via UART in the Low-Power mode, then the UART RX INDICATION pin must be pulled low and the user needs to wait for at least five milliseconds before sending the data. Pulling the UART RX INDICATION pin low allows the module to operate the 16 MHz clock and to enable UART.

© 2016-2019 Microchip Technology Inc.

TABLE 1-4: CONFIGURABLE FUNCTIONS AND DESCRIPTIONS (CONTINUED)

Function Name	Description
Pairing Key	When the RN4870/71 is connected to a remote device, the host MCU can use the Pairing Key pin to force the module to disconnect the link and go back to Standby state. The pin must be pulled down for at least 160 ms.
RF Active Indication	Use this indication pin to indicate that the module is currently performing an active transmission and receiving BLE data.

TABLE 1-5: STATUS INDICATION PINS

Status 1	Status 2	State
High	High	Power On
High	Low	Standby state
Low	Low	Connection established
Low	High	Data session open (Transparent UART)

TABLE 1-6: TEST POINTS ON THE BOTTOM SIDE

RN4870U	RN4870	RN4871U	RN4871	Symbol	Description
TP-1	TP-1	TP-3	TP-3	VCC_PA	1.55V RF PA LDO
TP-2	TP-2	TP-1	TP-5	CLDO_O	1.2V CLDO Output
TP-3	TP-3	TP-2	TP-2	VCC_RF	1.2V RF LDO Output
—	—	TP-4	TP-4	ULPC_O	1.2V ULPC LDO Output
—	—	TP-5	TP-1	BK_O	1.55V Buck Reg Output

FIGURE 1-5: BLOCK DIAGRAM OF THE RN4870/71

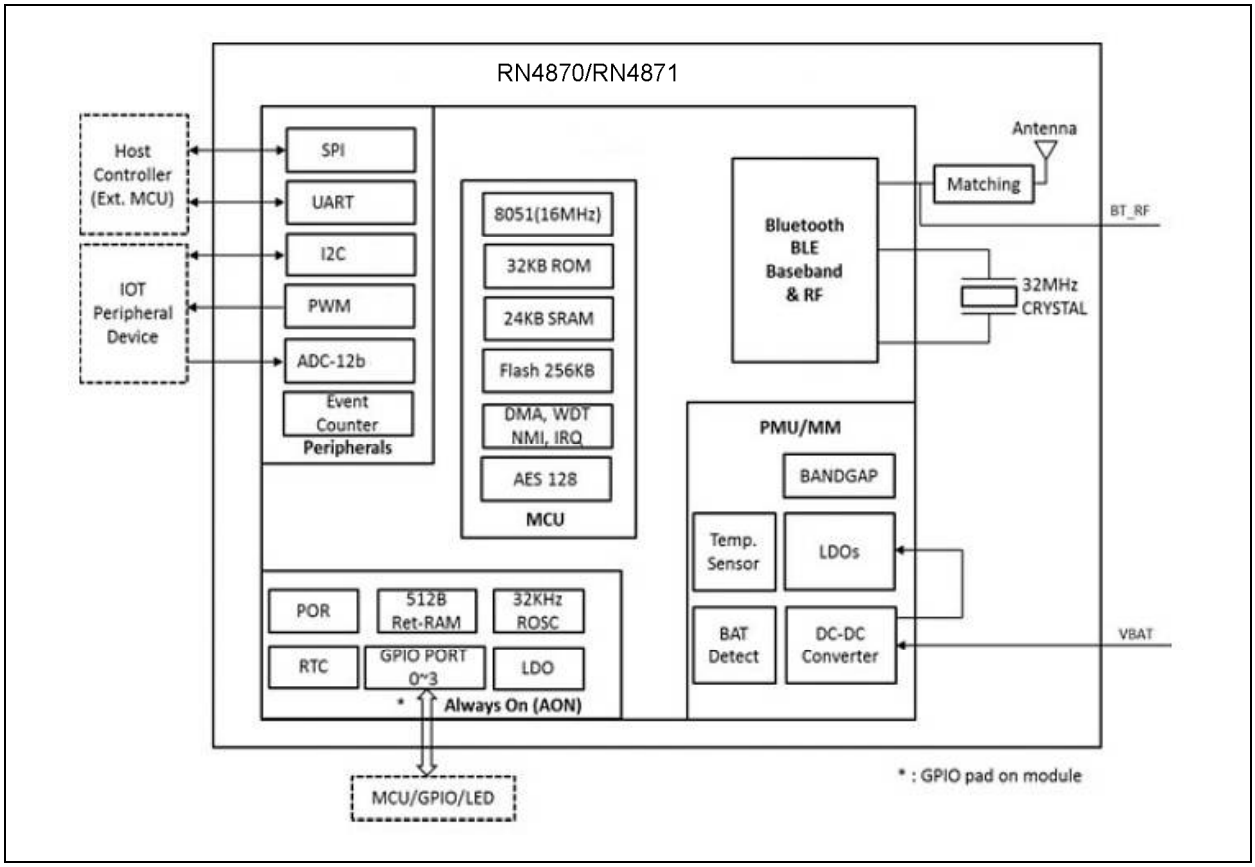

2.0 SPECIFICATIONS

Table 2-1 provides the general specifications for the module. Table 2-2, Table 2-3 and Table 2-4 provide the electrical characteristics and the current consumption of the module.

TABLE 2-1: GENERAL SPECIFICATIONS

Specification	Description
Standard Compliance	Bluetooth 5.0
Frequency Band	2.402 to 2.480 GHz
Modulation Method	GFSK
Maximum Data Rate (Transparent UART)	10 kbps (iOS®9)
Antenna	Ceramic
Interface	UART, AIO, PIO
Operating Range	1.9V to 3.6V
Sensitivity	-90 dBm
RF TX Power	0 dBm
Operating Temperature Range for RN4870-I and RN4871-I modules	-40°C to +85°C
Operating Temperature Range for RN4870-V and RN4871-V modules	-20°C to +70°C
Storage Temperature Range	-40°C to +125°C
Operating Relative Humidity Range	10% to 90%
Storage Relative Humidity Range	10% to 90%
Moisture Sensitivity Level	2

TABLE 2-2: ELECTRICAL CHARACTERISTICS

Parameter	Min.	Typ.	Max.	Units
Supply Voltage (V_{DD})	1.9	—	3.6	V
I/O Voltage Levels				
V_{IL} Input Logic Levels Low	V_{SS}	—	0.3 V_{DD}	V
V_{IH} Input Logic Levels High	0.7 V_{DD}	—	V_{DD}	V
V_{OL} Output Logic Levels Low	V_{SS}	—	0.2 V_{DD}	V
V_{OH} Output Logic Levels High	0.8 V_{DD}	—	V_{DD}	V
Reset				
Reset Low Duration	63	—	—	ns
Input and Tri-State Current with				
Pull-Up Resistance	34	48	74	kΩ
Pull-Down Resistance	29	47	86	kΩ

© 2016-2019 Microchip Technology Inc.

TABLE 2-3: CURRENT CONSUMPTION

Parameter	Min.	Typ.	Max.	Units
Supply Current				
TX mode Peak Current at V_{DD} = 3V, TX = 0 dBm, Buck mode	—	10 at +25°C	13 at +75°C/+85°C	mA
RX mode Peak Current at V_{DD} = 3V, Buck mode	—	10 at +25°C	13 at +75°C/+85°C	mA
Low-Power Mode Current(2)	—	60 at +25°C	—	µA
Shutdown Low-Power Mode	1	—	2.9	µA

Note 1: The current measurements are characterized across a sample of the RN4870/71 module at room temperature (+25°C), unless otherwise noted.

2: For more details on Low-Power mode, refer to the "*RN4870/71 Bluetooth® Low Energy Module User's Guide*" (DS50002466).

TABLE 2-4: CURRENT CONSUMPTION DURING APPLICATION MODE

Test Mode	Interval (ms)	Average Current Consumption
Advertising(1,2,3)	20	1.061 mA
	50	505 µA
	100	298 µA
	500	113 µA
	1000	89 µA
Connected(1,2,4)	18.75	2.23 mA
	50	2.13 mA
	100	2.10 mA
	500	83 µA
	1000	80 µA

Note 1: These measurements are done at an operating temperature of +25°C at 3.3V and are characterized across a sample of the RN4870/71 module.

2: Measurements taken with version 1.18 firmware loaded onto the module.

3: The advertising packet data payload is approximately 15 bytes in length.

4: The amount of data being transmitted between two peer devices can affect the average current measured. The average current measurements are done with only the necessary Bluetooth packets being exchanged to keep the connection active at the stated interval.

© 2016-2019 Microchip Technology Inc.

3.0 INTERFACE PINS

Figure 3-1 shows the power scheme using a 3.3V low-dropout regulator to the RN487x and a host MCU. This scheme ensures that the same voltage is used for both the module and the MCU.

Figure 3-1 also shows the basic UART connections to the host MCU.

Figure 3-2 shows the recommended connections for running the RN4870/71 on coin cell battery.

FIGURE 3-1: POWER SCHEME

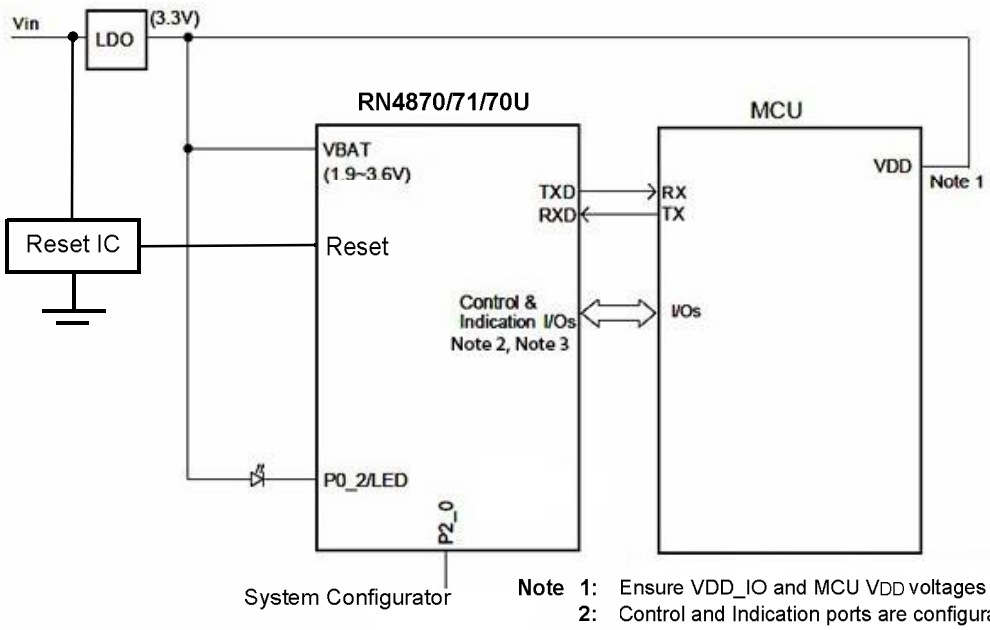

Note 1: Ensure VDD_IO and MCU VDD voltages are compatible
2: Control and Indication ports are configurable
3: To implement low-power operation, enable the UART_RX_IND pin and connect to ground.

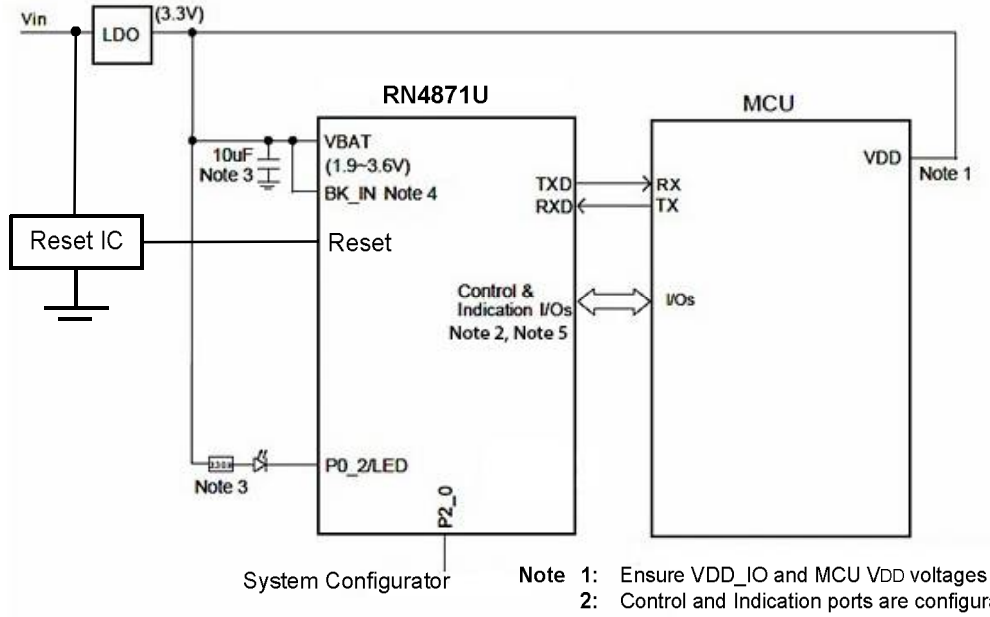

Note 1: Ensure VDD_IO and MCU VDD voltages are compatible
2: Control and Indication ports are configurable
3: 10 µF (X5R) and 330 ohm resistor are required for RN487x
4: BK_IN connects to VBAT for RN4871U
5: To implement low-power operation, enable the UART_RX_IND pin and connect to ground.

FIGURE 3-2: RN4870/71 COIN CELL POWER SCHEME

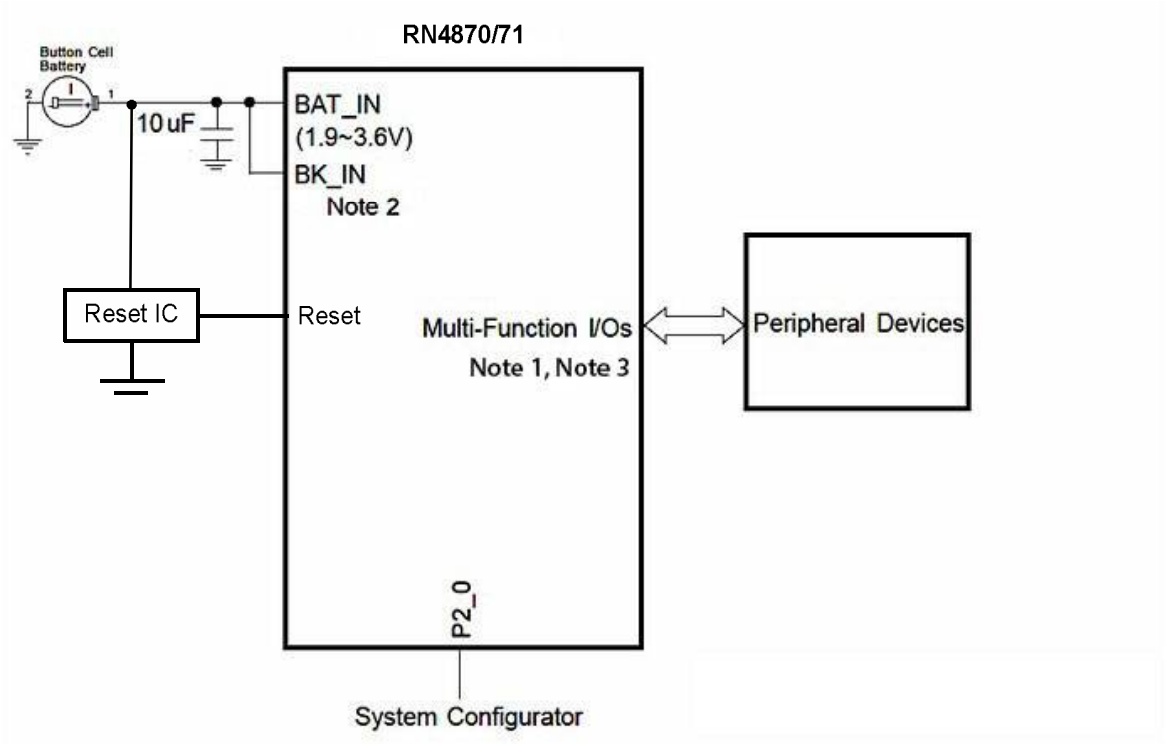

Note 1: Application includes ADC, PWM (RN4870), and I^2C bus interface

2: BK_IN connection is needed only for RN4871U.

3: To implement low-power operation, enable the UART_RX_IND pin and connect to ground.

The Configuration pins on the RN4870 can also be configured through Windows®-based User Interface (UI) Configuration tool, BLEDK3.

© 2016-2019 Microchip Technology Inc.

4.0 PHYSICAL DIMENSIONS AND ATTRIBUTES

4.1 RN4870 Module

Figure 4-1 shows the physical dimensions of the RN4870 module. Figure 4-2 illustrates the recommended PCB layout, and Figure 4-3 shows the recommended mounting details.

Ensure that there is *no* top copper layer near the test pin area, indicated by the shaded *keep out areas*, as shown in Figure 4-2. When laying out the host PCB, the areas under the antenna must *not* contain any top, inner layer, or bottom copper as shown in Figure 4-3. A low-impedance ground plane ensures the best radio performance (best range, lowest noise). Figure 4-3 also shows a minimum ground plane area to the left and right side of the module for best antenna performance. The ground plane can be extended beyond the minimum recommended as required for host PCB EMC noise reduction. For best range performance, keep all external metal at least 30 mm away from the ceramic chip antenna.

FIGURE 4-1: RN4870 MODULE DIMENSIONS

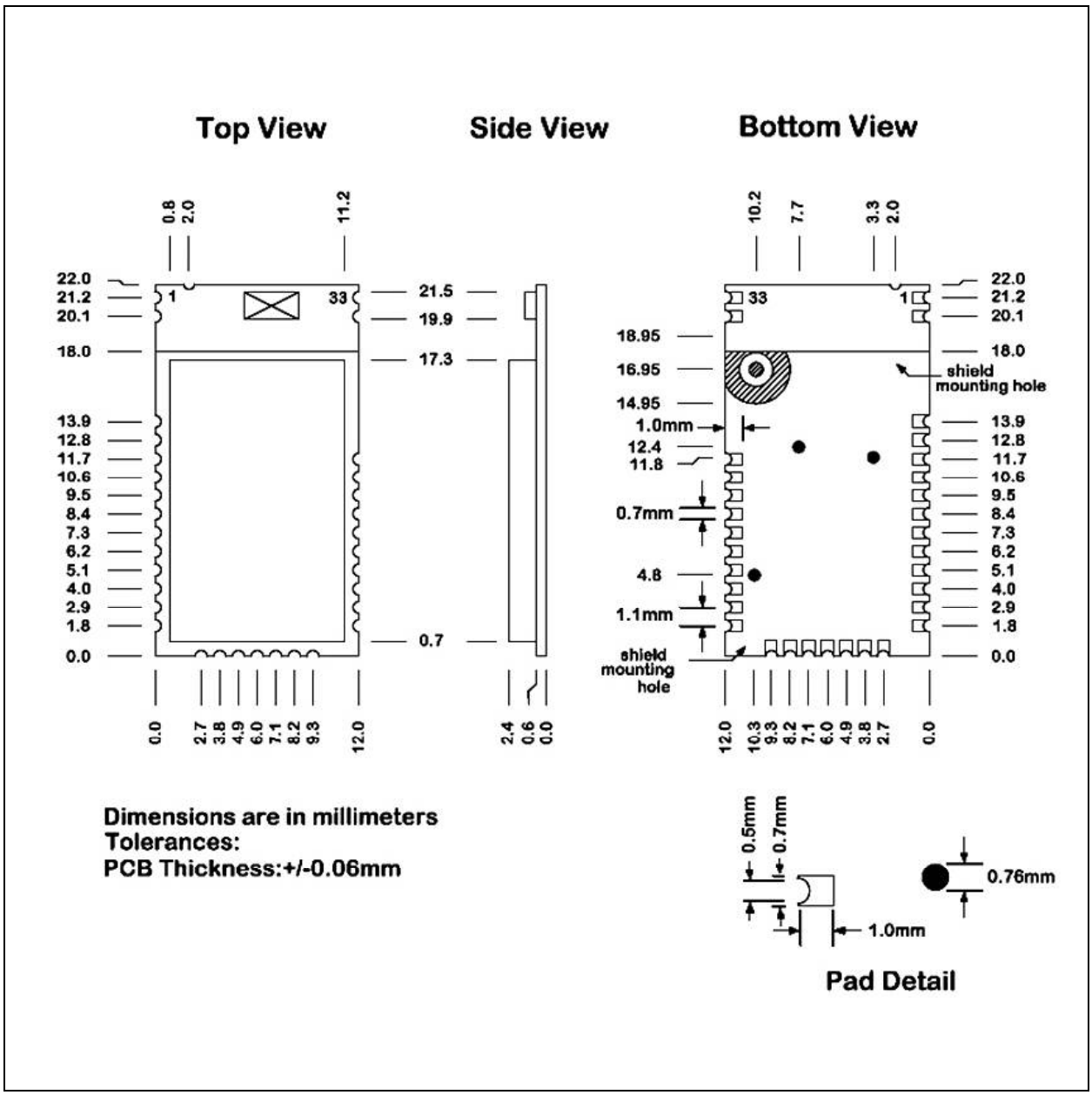

FIGURE 4-2: RN4870 RECOMMENDED PCB FOOTPRINT

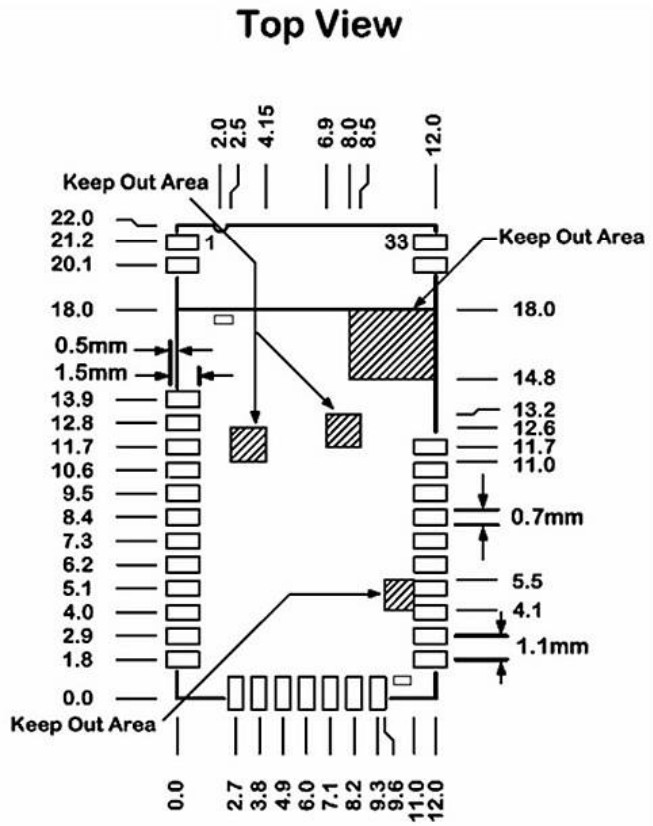

FIGURE 4-3: RECOMMENDED MOUNTING DETAILS

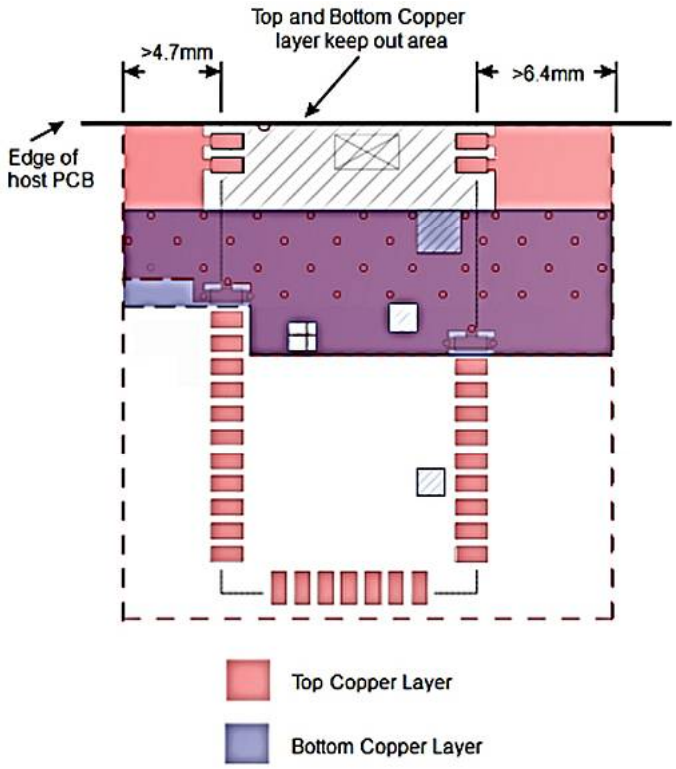

© 2016-2019 Microchip Technology Inc.

4.2 RN4870U Module

Figure 4-4 shows the physical dimensions of the RN4870U module. Figure 4-5 illustrates the recommended PCB layout, and Figure 4-6 shows the recommended mounting details.

A low-impedance ground plane ensures the best radio performance (best range, lowest noise). Pin 30 (BT_RF) is a 50 ohm connection that can be connected to an external antenna such as a PCB trace antenna, a component (chip) antenna, or through a host PCB 50 ohm microstrip trace. This trace can be extended to include passive parts for antenna attenuation padding, impedance matching, or to provide test posts. It is recommended that the microstrip trace be as short as possible for minimum loss and best impedance matching. If the microstrip trace is longer, a 50 ohm impedance is recommended.

FIGURE 4-4: RN4870U MODULE DIMENSIONS

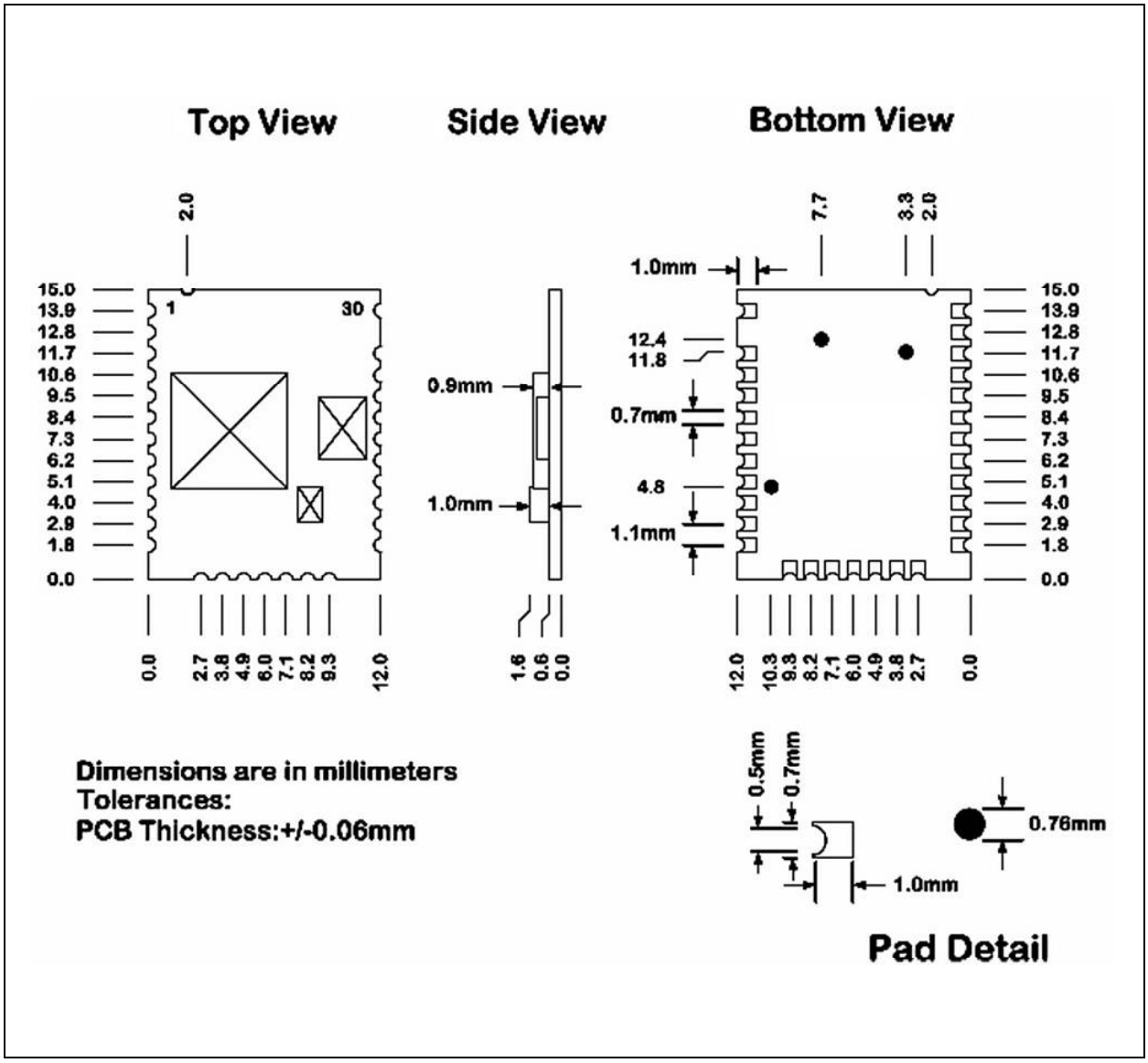

FIGURE 4-5: RN4870U RECOMMENDED PCB FOOTPRINT

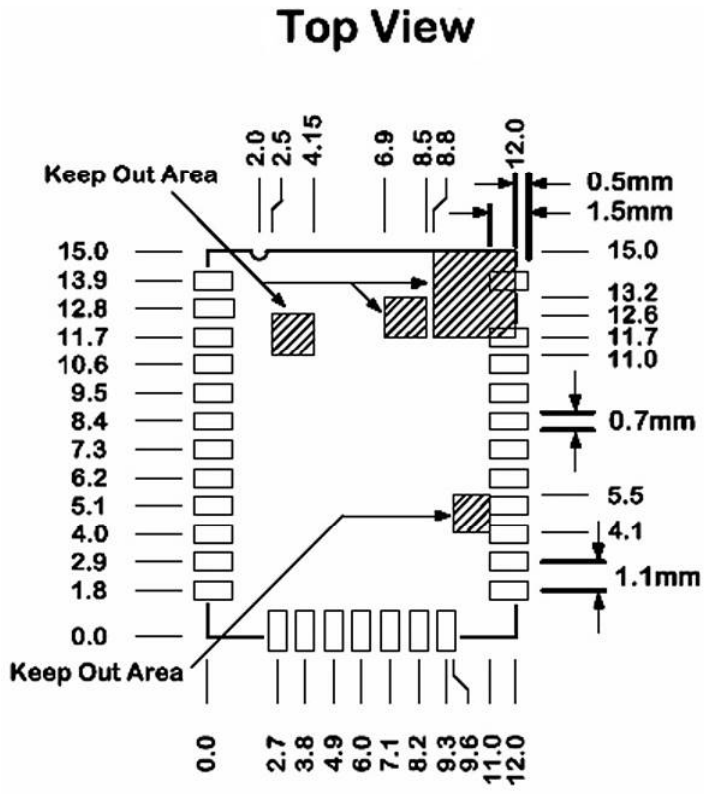

FIGURE 4-6: RN4870U RECOMMENDED PCB MOUNTING

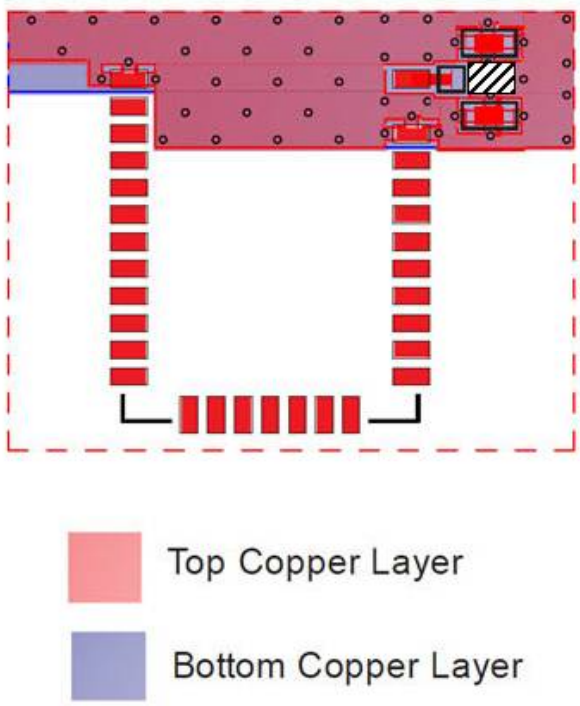

© 2016-2019 Microchip Technology Inc.

4.3 RN4871 Module

Figure 4-7 shows the physical dimensions of the RN4871 module. Figure 4-8 illustrates the recommended PCB layout, and Figure 4-9 shows the recommended mounting details.

Ensure that there is *no* top copper layer near the test pin area, indicated by the shaded *keep out areas*, as shown in Figure 4-8. When laying out the host PCB, the areas under the antenna must *not* contain any top, inner layer, or bottom copper as shown in Figure 4-9. A low-impedance ground plane ensures the best radio performance (best range, lowest noise). Figure 4-9 also shows a space area around the antenna section for best antenna performance. The ground plane can be extended beyond the minimum recommended as required for host PCB EMC noise reduction. For best range performance, keep all external metal at least 30 mm away from the ceramic chip antenna.

FIGURE 4-7: RN4871 MODULE DIMENSIONS

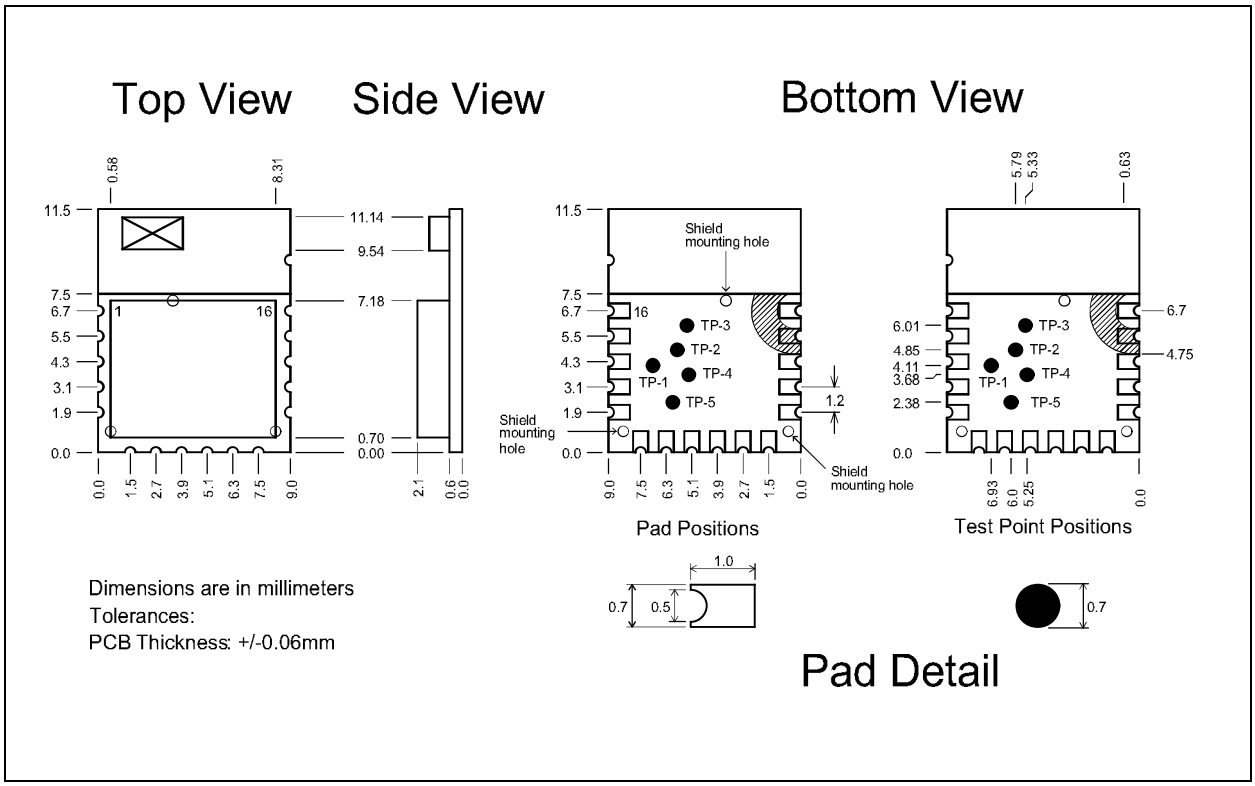

FIGURE 4-8: RN4871 RECOMMENDED PCB FOOTPRINT

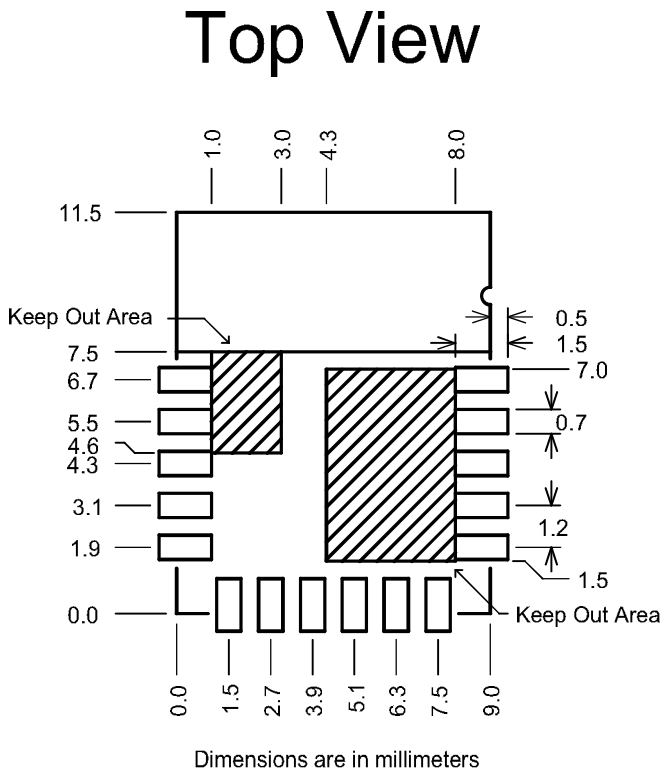

FIGURE 4-9: RN4871 RECOMMENDED PCB MOUNTING SUGGESTION

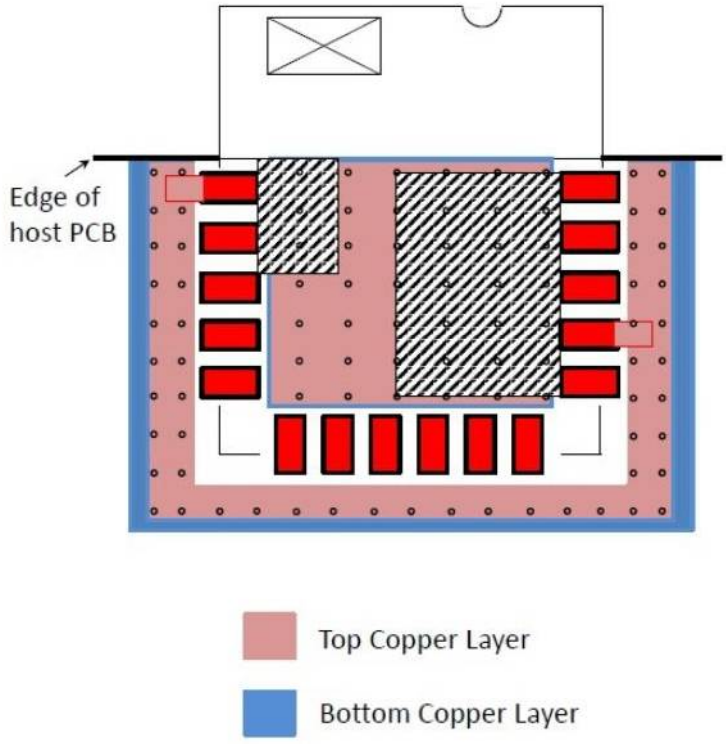

© 2016-2019 Microchip Technology Inc.

4.4 RN4871U Module

Figure 4-10 shows the physical dimensions of the RN4871U module. Figure 4-11 illustrates the recommended PCB layout. It is highly recommended to lay out the host PCB as suggested in Figure 4-12. Figure 4-13 shows the recommended placement for the module on the host PCB board. For optimal transmission and reception sensitivity, place the module at the edge of the board.

A low-impedance ground plane ensures the best radio performance (best range, lowest noise). Pin 1 (BT_RF) is a 50 ohm connection that can be connected to an external antenna such as a PCB trace antenna, a component (chip) antenna, or through a host PCB 50 ohm microstrip trace. This trace can be extended to include passive parts for antenna attenuation padding, impedance matching, or to provide test posts. It is recommended that the microstrip trace to be as short as possible for minimum loss and best impedance matching. If the microstrip trace is longer, a 50 ohm impedance is recommended.

FIGURE 4-10: RN4871U MODULE DIMENSIONS

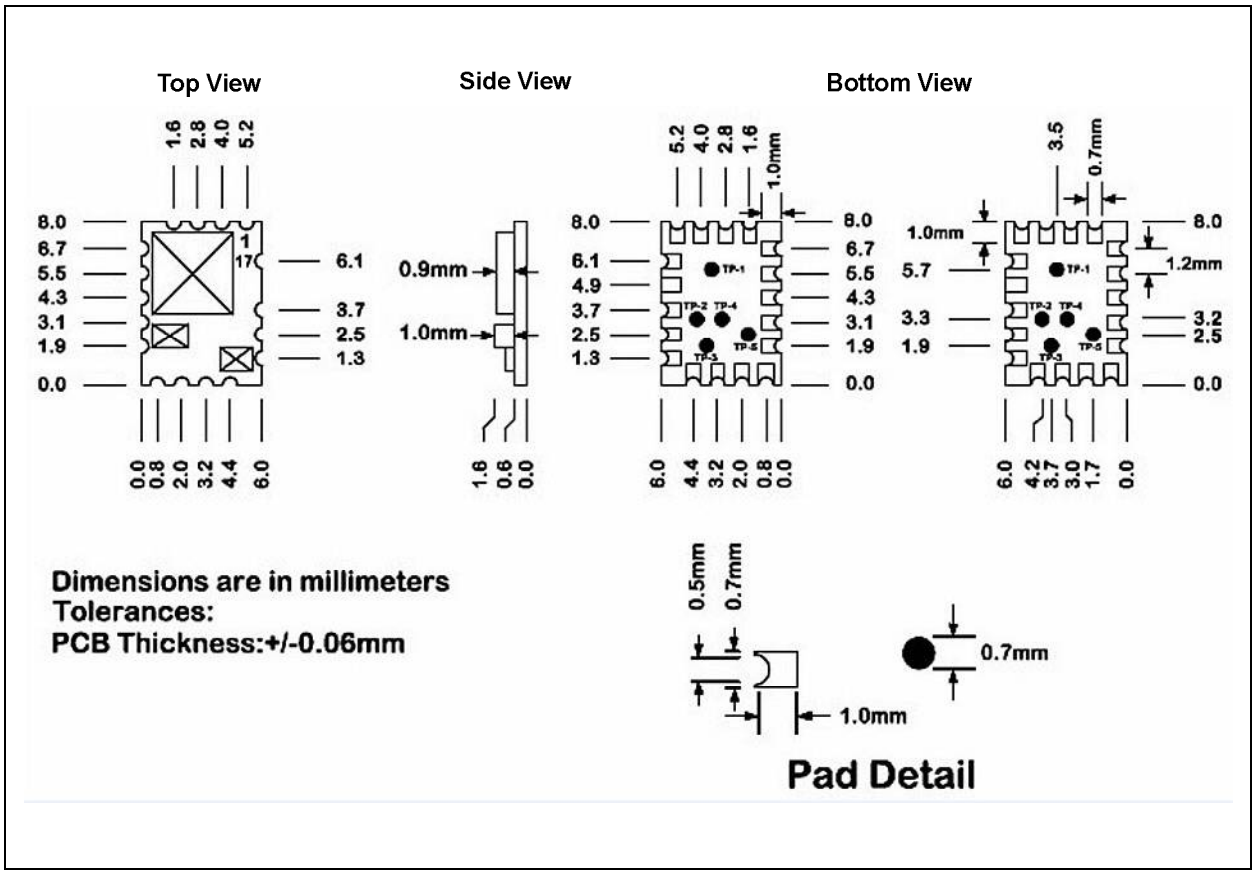

FIGURE 4-11: RN4871U RECOMMENDED PCB FOOTPRINT

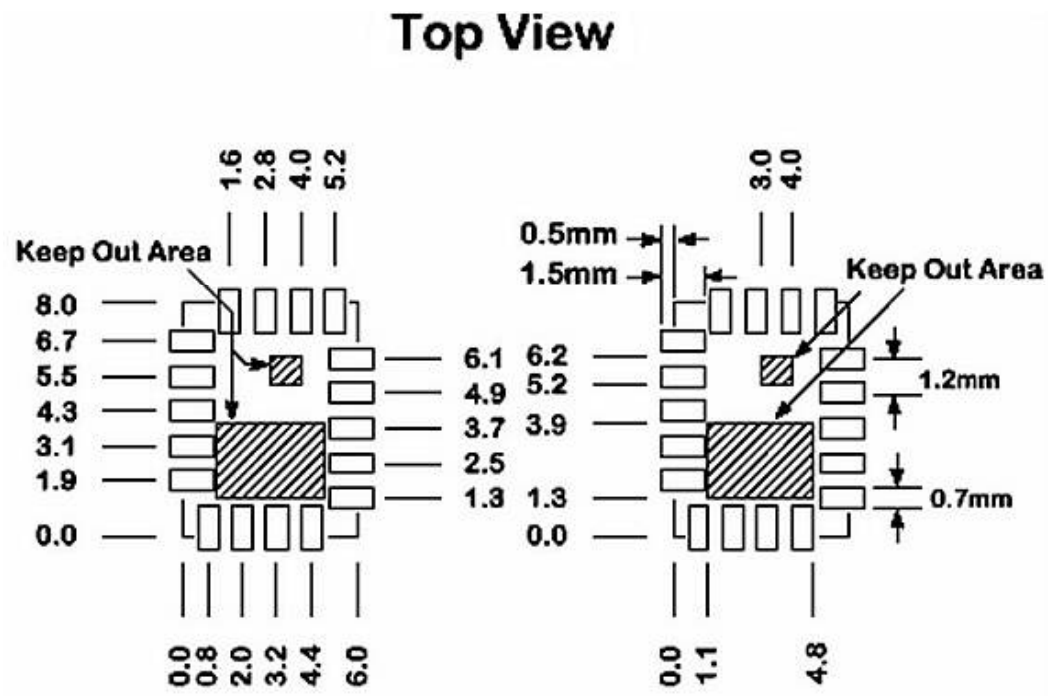

FIGURE 4-12: RN4871U RECOMMENDED PCB MOUNTING

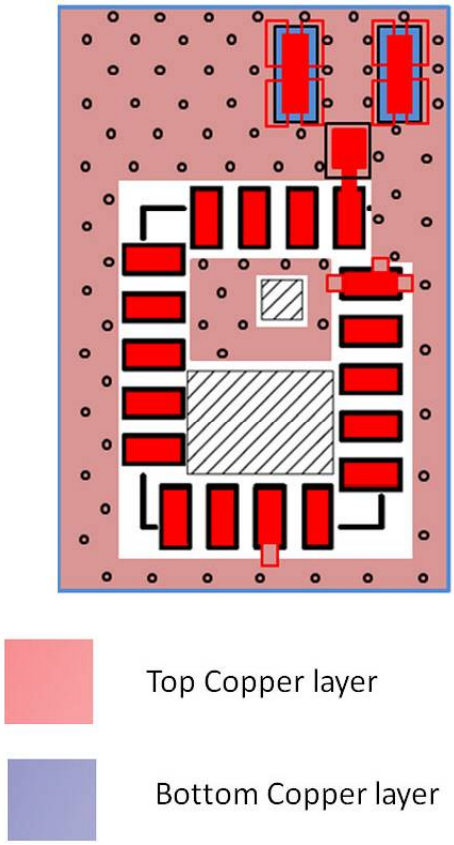

© 2016-2019 Microchip Technology Inc.

FIGURE 4-13: RECOMMENDATIONS FOR THE PLACEMENT OF THE MODULE ON THE HOST PCB BOARD

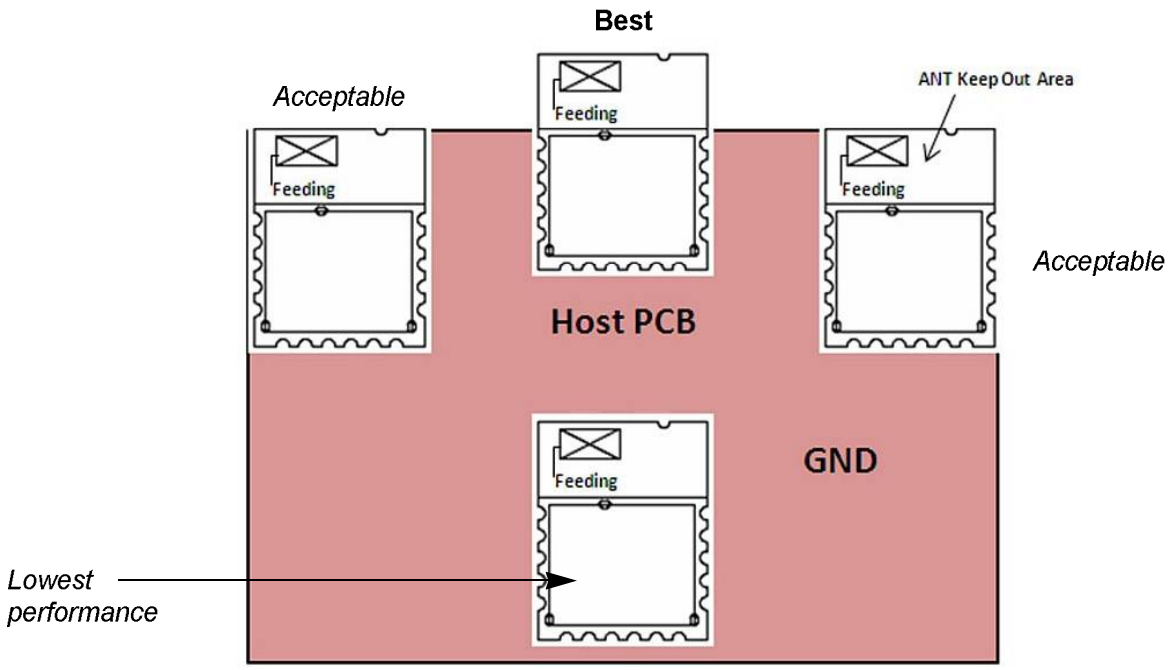

4.5 Soldering Recommendations

The RN4870/71 Bluetooth module is assembled using standard lead-free reflow profile IPC/JEDEC J-STD-020.

The module can be soldered to the host PCB using standard leaded and lead-free solder reflow profiles.

To avoid damaging the module, the following recommendations are given:

- Microchip Technology Application Note, *"AN233 Solder Reflow Recommendation"* (DS00233) provides solder reflow recommendations
- Do *not* exceed peak temperature (T_P) of 250°C
- Refer to the solder paste data sheet for specific reflow profile recommendations
- Use no-clean flux solder paste
- Do *not* wash as moisture can be trapped under the shield
- Use only one flow. If the PCB requires multiple flows, apply the module on the final flow.

5.0 APPLICATION REFERENCE CIRCUITS

5.1 External Configuration and Programming

The RN4870/71 module can be configured and firmware programmed using an external configuration and programming tool. Figure 5-1 shows the mandatory connections required between the module and the external programming header. It is recommended to include these pin connections on the host PCB for development. For accessing the various configuration and indication pins, use Table 1-2, Table 1-3, Table 1-4 and Table 1-5.

5.2 Reference Circuit

Figure 5-2 through Figure 5-5 show the reference circuits for various modules under the RN4870/71 family. In the circuits, the power input range is 1.9V ~ 3.6V. A battery reverse protection circuit is recommended in case a battery power input is used. Note that the VDD_IO is the same as the power input. In case of a LED connection, the power input must be greater than 3.0V. For the RN4870U, an RF antenna matching circuit must also be included as shown in Figure 5-3.

FIGURE 5-1: EXTERNAL PROGRAMMING HEADER CONFIGURATIONS

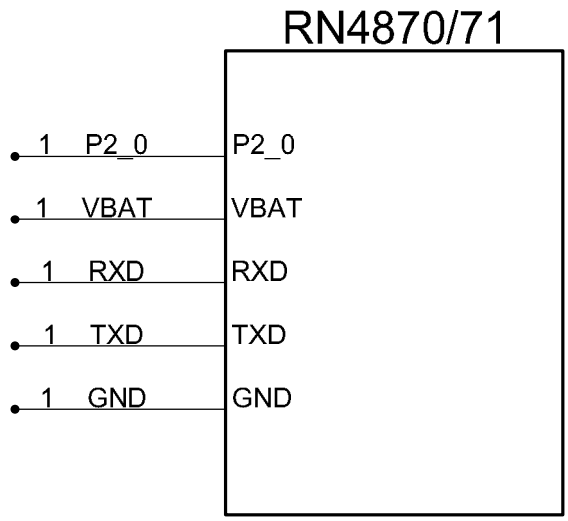

FIGURE 5-2: RN4870 REFERENCE CIRCUIT

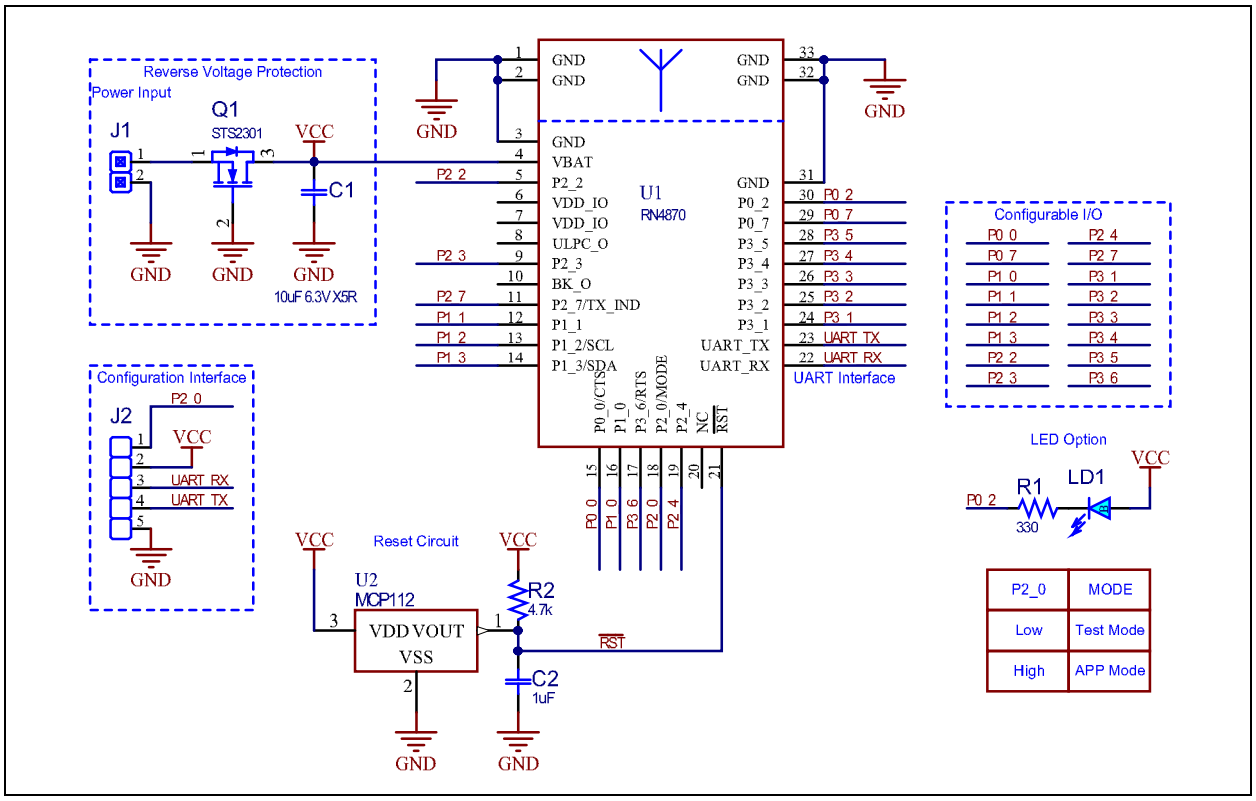

FIGURE 5-3: RN4870U REFERENCE CIRCUIT

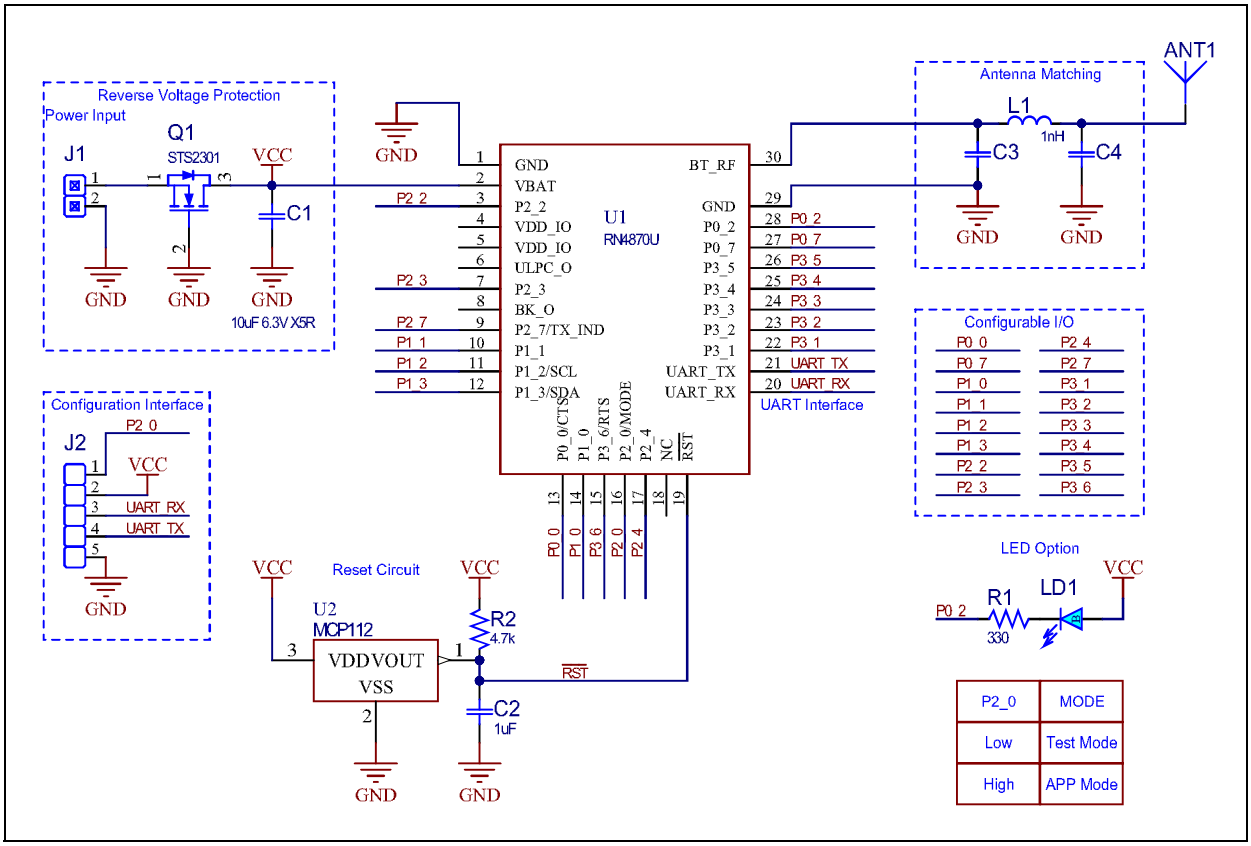

© 2016-2019 Microchip Technology Inc.

FIGURE 5-4: RN4871 REFERENCE CIRCUIT

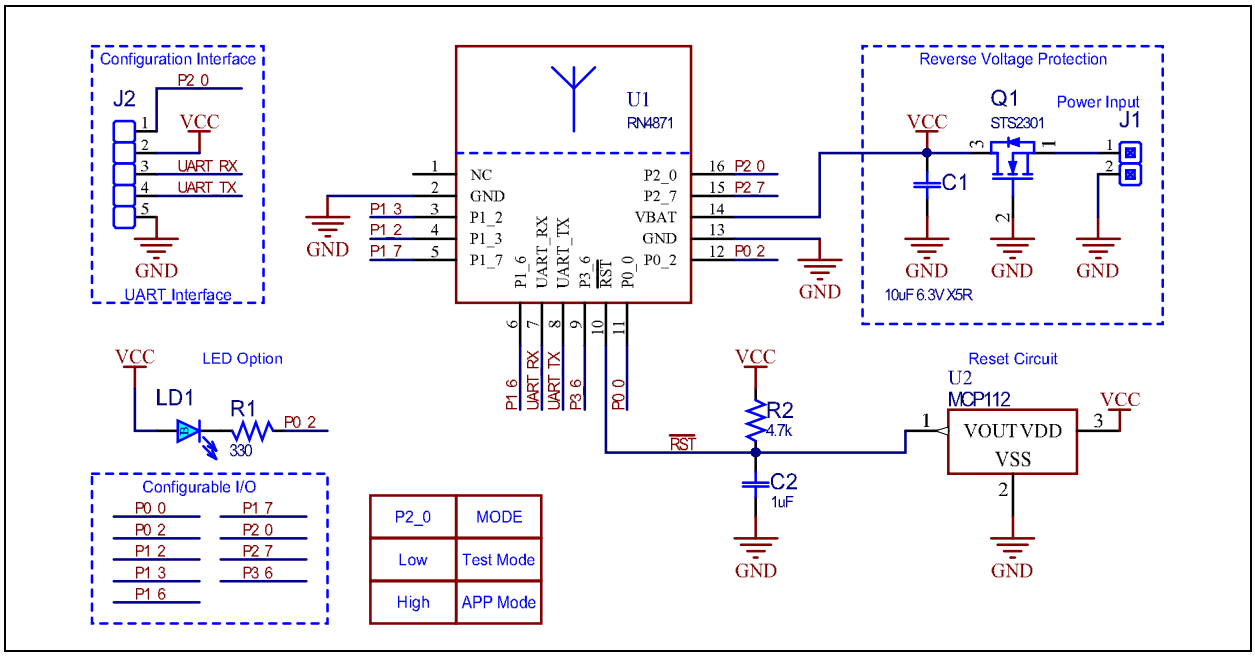

FIGURE 5-5: RN4871U REFERENCE CIRCUIT

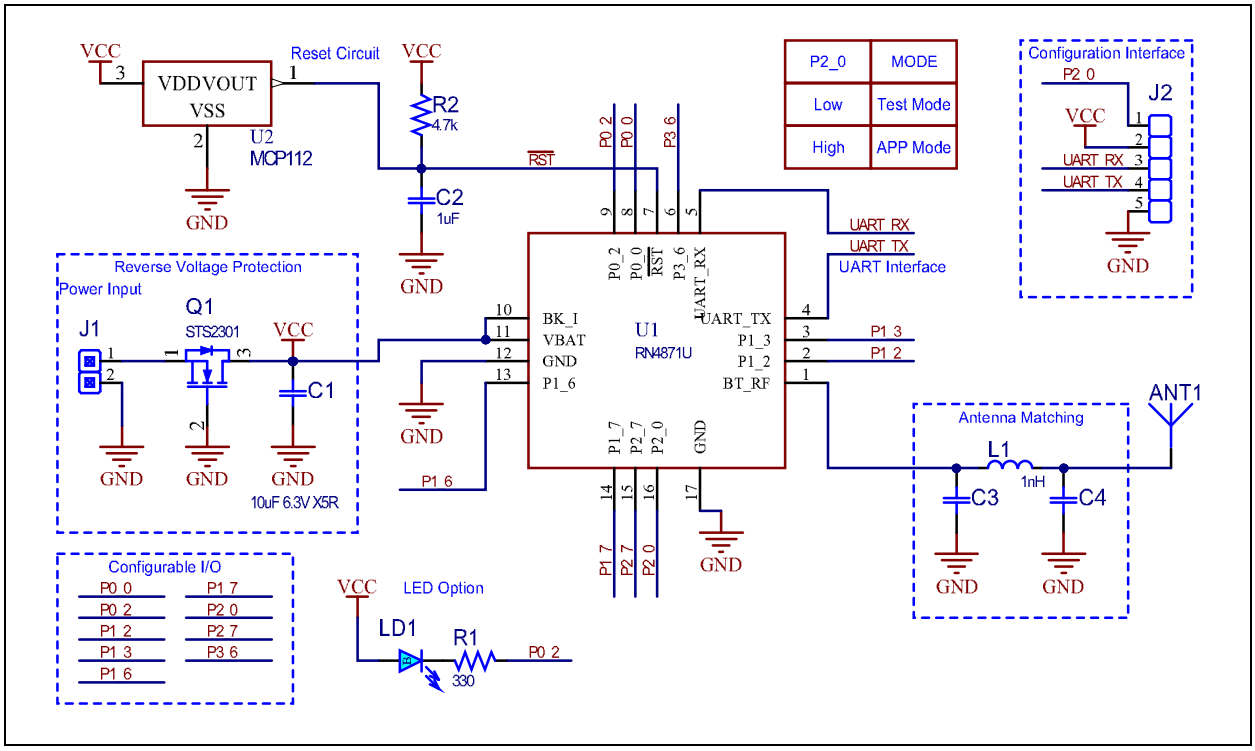

5.3 Power Drop Protection

To prevent any problems that may arise when the power supply goes below 1.9V, a power-supply drop-protection circuit is recommended. Essentially, this circuit consists of a Reset IC which acts as an *Open Drain* with a Delay =< 10 ms, and is triggered at 1.8V power supply. Figure 5-6 shows a recommended power drop protection circuit.

FIGURE 5-6: POWER DROP PROTECTION CIRCUIT

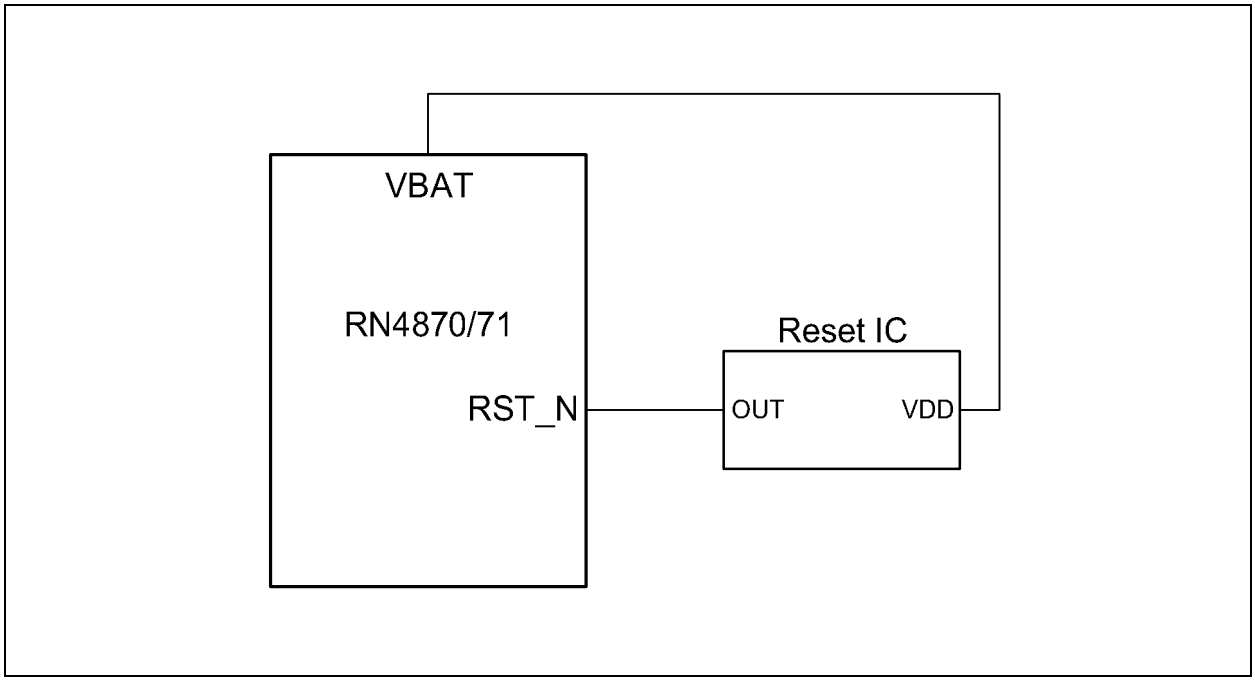

© 2016-2019 Microchip Technology Inc.

6.0 ASCII COMMAND API

The RN4870/71 command Application Programming Interfaces (APIs) are documented in the *"RN4870/71 Bluetooth® Low Energy Module User's Guide"* (DS50002466).

The following are the available command options and their categories:

- Connection
  - Establish connection
  - Disconnect
  - Bond/Unbond current connection
  - Start/Stop scan for other devices
  - Add/Delete peer devices to white list
  - Read RSSI values
  - Stop connection process
- I/O
  - Read/Write I^2C
  - Change settings in the EEPROM
  - Configure pin functions
  - Configure GPIO mask
  - Set/Get GPIO states
  - Read and write analog data
  - PWM control (only for RN4870)
- System
  - Reboot
  - Factory default
  - Enter and Exit Command mode
  - Enter Low-Power mode
- Scripting
  - Enter Script mode
  - Declare event handler
  - Execute current script
  - List current script
  - Clear script
  - Define user function
- GATT Services
  - Create/Delete public services/characteristics
  - Read/Write characteristic values
  - Set notification for characteristics
- GAP Role
  - Central, Peripheral, Observer and Broadcaster
- Advertising
  - Start/Stop
  - Set custom advertisement content
  - Set scan response content
  - Set beacon content
- Private Service
  - Create/Delete private services/characteristics
  - Read/Write characteristic values
  - Set notification for characteristics
- Transparent UART
  - Enable/Disable
  - Peripheral side configuration
  - Central side configuration
- Remote configuration of the module
- Read individual device information or profile settings

© 2016-2019 Microchip Technology Inc.

7.0 SUPPORTED SERVICES

The RN4870 supports two built-in GATT services:

- Device information public service
- UART transparent private service, which handles data streaming function

In addition to the above predefined private services, the RN4870 provides the ability to create private services. If the services are supported on both end points of a Bluetooth Low Energy connection, such as Central and Peripheral devices, data can be exchanged. For example, two RN4870 modules can define a custom (private) service with their own unique characteristics. Data can be exchanged easily via Command API. Private services are *not* registered with the Bluetooth SIG, and therefore *not* inter-operable with other Bluetooth Low Energy devices, unless the device implements the private service. An example of a built-in private service is the Transparent UART. For an example on how to create a custom service using the RN4870, refer to *"RN4870/71 Bluetooth® Low Energy Module User's Guide"* (DS50002466).

RN4870 allows custom-defined services up to five public and four private services. Each custom-defined service allows up to eight custom-defined characteristics. All service definitions are saved in on-board Non-Volatile Memory (NVM) where the user must setup the module only once.

8.0 ANTENNA CHARACTERISTICS

The RN4870 and RN4871 modules contain an integral ceramic chip antenna. Figure 8-1 and Figure 8-2 show the antenna performance on the modules.

FIGURE 8-1: RN4870 ANTENNA PERFORMANCE

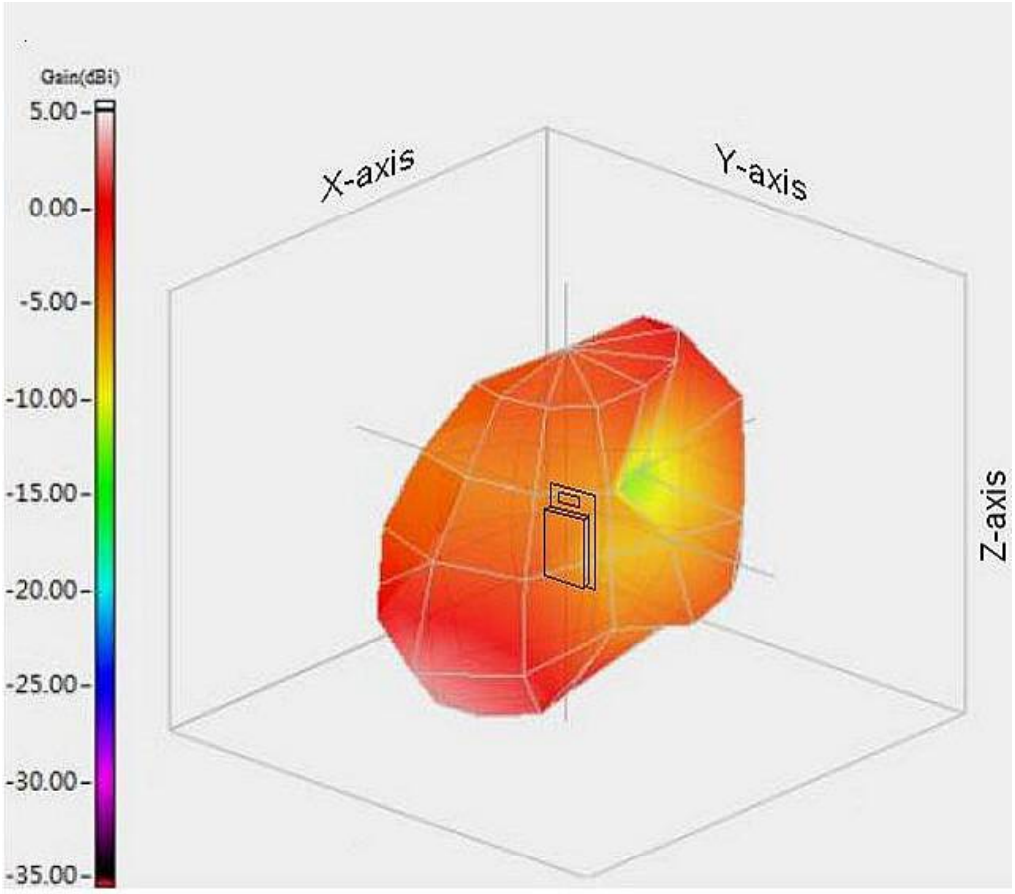

Parameter	Values
Frequency	2450 MHz
Max Gain	1.63 dBi
Efficiency	71.55%

Antenna Description	Manufacturer Part Number	Manufacturer
ANT ANT3216A063R2400A PIFA 2.4GHz L3 2W1.6	ANT3216A063R2400A	Yageo Corporation

FIGURE 8-2: RN4871 ANTENNA PERFORMANCE

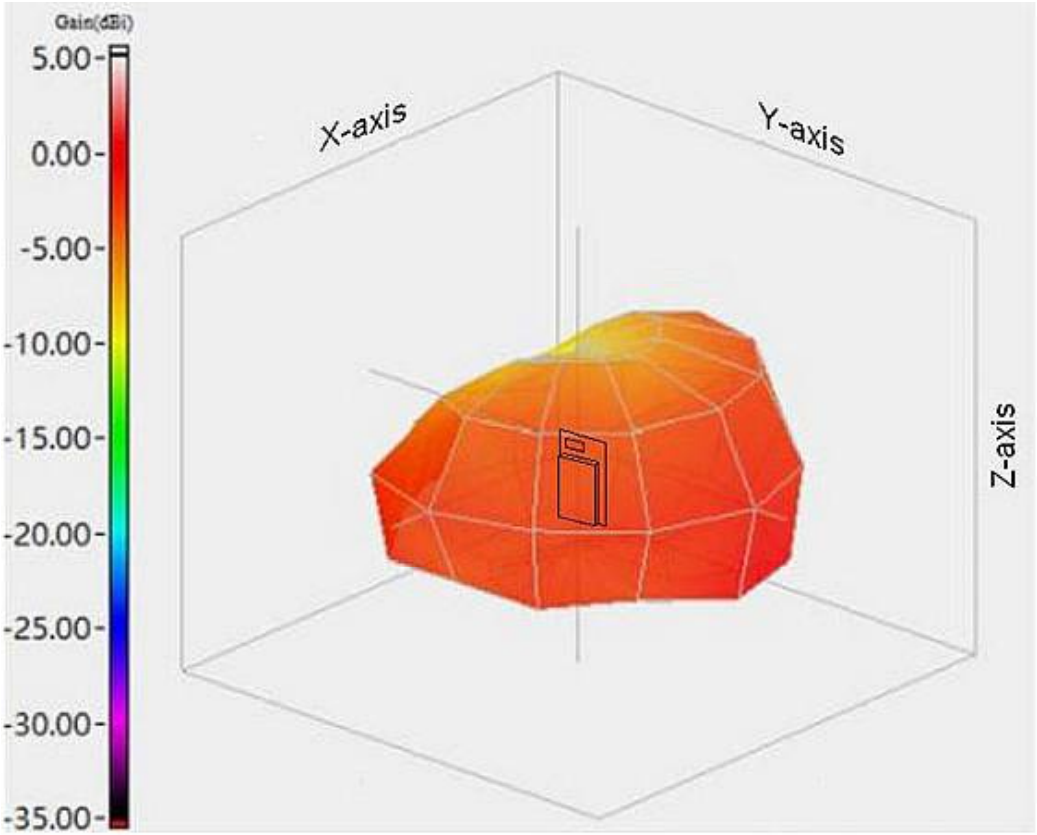

Parameter	Values
Frequency	2442 MHz
Max Gain	0.1 dBi
Efficiency	42.7%

Antenna Description	Manufacturer Part Number	Manufacturer
ANT AANT3216LL00R2400A PIFA 2.4GHz L3 2W1.6	ANT3216LL00R2400A	Yageo Corporation

© 2016-2019 Microchip Technology Inc.

9.0 TIMING CHARACTERISTICS

Figure 9-1 shows the timing diagram for the RN4870/71 module when it is reset in the Test mode and Application mode. Figure 9-2 shows the timing diagram for the module when it is powered on. In Application mode, when RN4870/71 is ready to talk to MCU after Reset, the module provides a UART response indicating that the Reset is complete. For more details, refer to the *"RN4870/71 Bluetooth® Low Energy Module User's Guide"* (DS50002466).

FIGURE 9-1: TIMING DIAGRAM OF RN4870/71 UART READY AFTER RESET (IN TEST AND APPLICATION MODE)

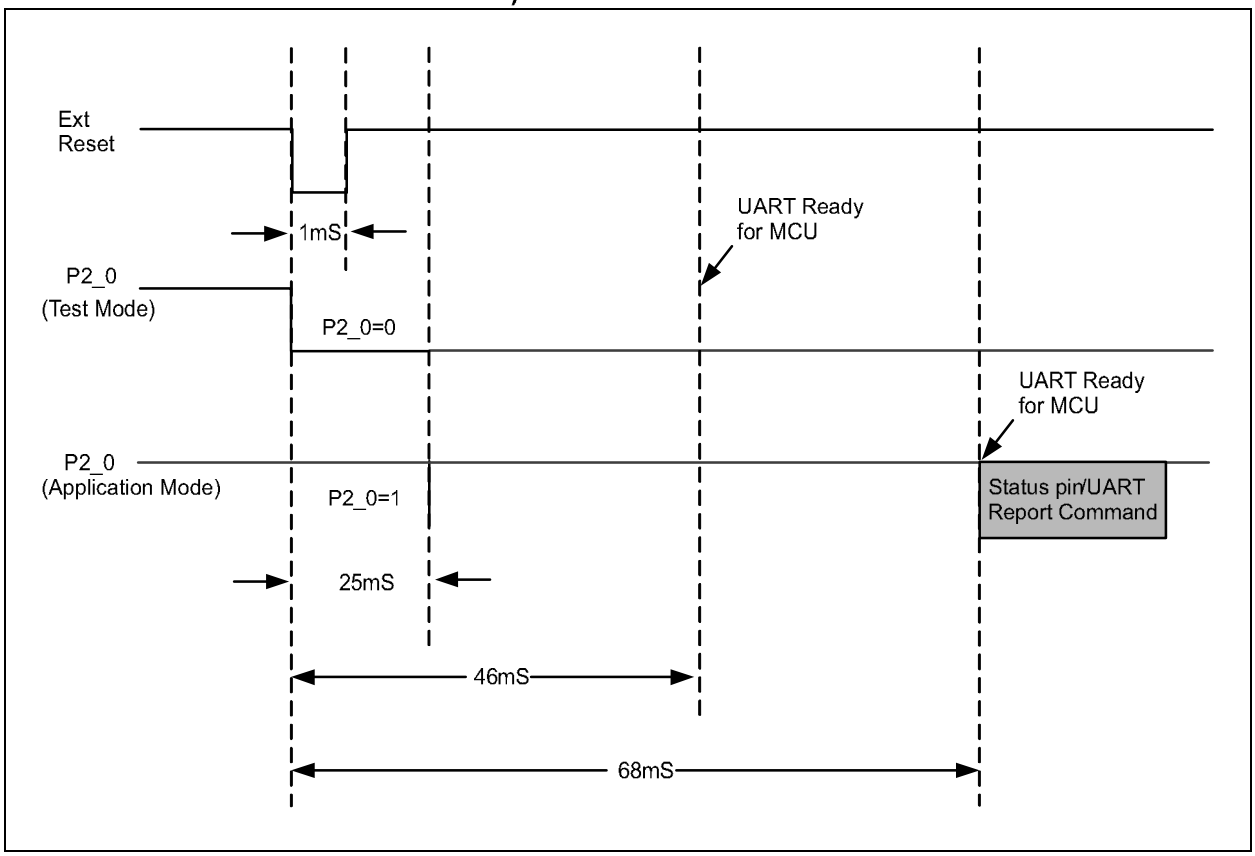

FIGURE 9-2: TIMING DIAGRAM OF RN4870/71 UART WHEN POWERED ON (IN TEST AND APPLICATION MODE)

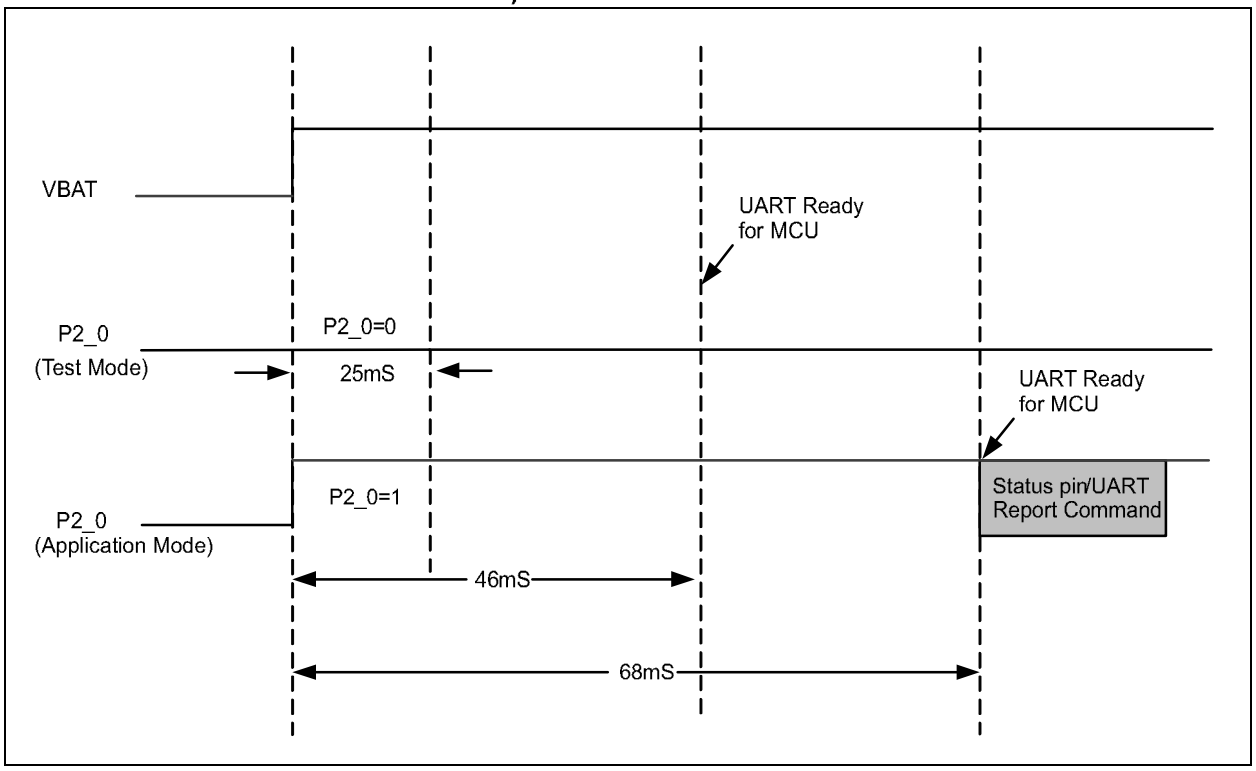

Table 9-1 shows the error rate for various UART baud rates for the RN4870/71 module. The system clock is running at 16 MHz.

TABLE 9-1: ERROR RATE FOR VARIOUS BAUD RATES ON THE RN4870/71

Set Baud Rate	Measured Baud Rate	Error
921600	941176	-2.12%
460800	457143	0.79%
307200	307692	-0.16%
230400	231884	-0.64%
115200	115942	-0.64%
57600	57971	-0.64%
38400	38095	0.79%
19200	19048	0.79%
9600	9524	0.79%

© 2016-2019 Microchip Technology Inc.

10.0 REGULATORY APPROVAL

The RN4870 module has received the regulatory approval for the following countries:

- United States/FCC ID: A8TBM70ABCDEFGH
- Canada/ISED
  - IC: 12246A-BM70BLES1F2
  - HVIN: BM70BLES1F2
- Europe/CE
- Japan/MIC: 202-SMD069
- Korea/KCC: MSIP-CRM-mcp-BM70BLES1FC2
- Taiwan/NCC No: CCAN15LP0501T3
- China/SRRC: CMIIT ID: 2016DJ5729

The RN4871 module has received the regulatory approval for the following countries:

- United States/FCC ID: A8TBM71S2
- Canada/ISED
  - IC: 12246A-BM71S2
  - HVIN: BM71BLES1FC2
- Europe/CE
- Japan/MIC: 005-101150
- Korea/KCC: MSIP-CRM-mcp-BM71BLES1FC2
- Taiwan/NCC No: CCAN16LP0011T7
- China/SRRC: CMIIT ID: 2016DJ5890

10.1 United States

The RN4870/71 module has received Federal Communications Commission (FCC) CFR47 Telecommunications, Part 15 Subpart C “Intentional Radiators” single-modular approval in accordance with Part 15.212 Modular Transmitter approval. Single-modular transmitter approval is defined as a complete RF transmission sub-assembly, designed to be incorporated into another device, that must demonstrate compliance with FCC rules and policies independent of any host. A transmitter with a modular grant can be installed in different end-use products (referred to as a host, host product, or host device) by the grantee or other equipment manufacturer, then the host product may not require additional testing or equipment authorization for the transmitter function provided by that specific module or limited module device.

A host product itself is required to comply with all other applicable FCC equipment authorization regulations, requirements, and equipment functions that are not associated with the transmitter module portion. For example, compliance must be demonstrated: to regulations for other transmitter components within a host product; to requirements for unintentional radiators (Part 15 Subpart B), such as digital devices, computer peripherals, radio receivers, etc.; and to additional authorization requirements for the non-transmitter functions on the transmitter module (i.e., Verification or Declaration of Conformity) as appropriate (e.g., Bluetooth and Wi-Fi® transmitter modules may also contain digital logic functions).

10.1.1 LABELING AND USER INFORMATION REQUIREMENTS

The RN4870 module has been labeled with its own FCC ID number, and if the FCC ID is not visible when the module is installed inside another device, then the outside of the finished product into which the module is installed must also display a label referring to the enclosed module. This exterior label can use wording as follows:

For the RN4870 module:

> Contains Transmitter Module
> FCC ID: A8TBM70ABCDEFGH
> *or*
> Contains FCC ID: A8TBM70ABCDEFGH
>
> This device complies with Part 15 of the FCC Rules. Operation is subject to the following two conditions: (1) this device may not cause harmful interference, and (2) this device must accept any interference received, including interference that may cause undesired operation.

Due to the limited size of the RN4871, the FCC Identifier (FCC ID) is not displayed on the module. Therefore, the FCC ID must be placed on the outside of the finished product into which the module is installed must also display a label referring to the enclosed module. This exterior label can use wording as follows:

For the RN4871 module:

> Contains Transmitter Module
> FCC ID: A8TBM71S2
> *or*
> Contains FCC ID: A8TBM71S2
>
> This device complies with Part 15 of the FCC Rules. Operation is subject to the following two conditions: (1) this device may not cause harmful interference, and (2) this device must accept any interference received, including interference that may cause undesired operation.

A user's manual for the product should include the following statement:

> This equipment has been tested and found to comply with the limits for a Class B digital device, pursuant to part 15 of the FCC Rules. These limits are designed to provide reasonable protection against harmful interference in a residential installation. This equipment generates, uses and can radiate radio frequency energy, and if not installed and used in accordance with the instructions, may cause harmful interference to radio communications. However, there is no guarantee that interference will not occur in a particular installation. If this equipment does cause harmful interference to radio or television reception, which can be determined by turning the equipment off and on, the user is encouraged to try to correct the interference by one or more of the following measures:
> - Reorient or relocate the receiving antenna.
> - Increase the separation between the equipment and receiver.
> - Connect the equipment into an outlet on a circuit different from that to which the receiver is connected.
> - Consult the dealer or an experienced radio/TV technician for help.

Additional information on labeling and user information requirements for Part 15 devices can be found in KDB Publication 784748 available at the FCC Office of Engineering and Technology (OET) Laboratory Division Knowledge Database (KDB) http://apps.fcc.gov/oetcf/kdb/index.cfm.

10.1.2 RF EXPOSURE

All transmitters regulated by FCC must comply with RF exposure requirements. KDB Publication 447498 General RF Exposure Guidance provides guidance in determining whether proposed or existing transmitting facilities, operations or devices comply with limits for human exposure to Radio Frequency (RF) fields adopted by the Federal Communications Commission (FCC).

Output power listed is conducted. This grant is valid only when the module is sold to OEM integrators and must be installed by the OEM or OEM integrators. This transmitter is restricted for use with the specific antenna(s) tested in this application for Certification and must not be co-located or operating in conjunction with any other antenna or transmitters within a host device, except in accordance with FCC multi-transmitter product procedures. This module is approved for installation into mobile or/and portable host platforms.

10.1.3 HELPFUL WEB SITES

Federal Communications Commission (FCC): http://www.fcc.gov

FCC Office of Engineering and Technology (OET) Laboratory Division Knowledge Database (KDB): http://apps.fcc.gov/oetcf/kdb/index.cfm

10.2 Canada

The RN4870/71 module has been certified for use in Canada under Innovation, Science and Economic Development Canada (ISED, formerly Industry Canada) Radio Standards Procedure (RSP) RSP-100, Radio Standards Specification (RSS) RSS-247 and RSS-Gen. Modular approval permits the installation of a module in a host device without the need to recertify the device.

10.2.1 LABELING AND USER INFORMATION REQUIREMENTS

Labeling Requirements for the Host product (from RSP-100-Issue 11, Section 3): The host product shall be properly labeled to identify the module within the host device.

On the RN4871, due to the limited module size, the IC identifier is displayed in the data sheet only and it cannot be displayed on the module label.

The Innovation, Science and Economic Development Canada certification label of a module shall be clearly visible at all times when installed in the host device; otherwise, the host device must be labeled to display the Innovation, Science and Economic Development Canada certification number of the module, preceded by the word "Contains", or similar wording expressing the same meaning, as follows:

For the RN4870 module:

Contains IC: 12246A-BM70BLES1F2

For the RN4871 module:

Contains IC: 12246A-BM71S2

© 2016-2019 Microchip Technology Inc.

User Manual Notice for License-Exempt Radio Apparatus (from Section 8.4, RSS-Gen, Issue 4, November 2014): User manuals for license-exempt radio apparatus shall contain the following or equivalent notice in a conspicuous location in the user manual or alternatively on the device or both:

This device complies with Industry Canada's license-exempt RSS standard(s). Operation is subject to the following two conditions:

(1) This device may not cause interference, and

(2) This device must accept any interference, including interference that may cause undesired operation of the device.

Le présent appareil est conforme aux CNR d'Industrie Canada applicables aux appareils radio exempts de licence. L'exploitation est autorisée aux deux conditions suivantes:

(1) l'appareil ne doit pas produire de brouillage, et

(2) l'utilisateur de l'appareil doit accepter tout brouillage radioélectrique subi, même si le brouillage est susceptible d'en compromettre le fonctionnement.

Guidelines on Transmitter Antenna for License Exempt Radio Apparatus:

Under Industry Canada regulations, this radio transmitter may only operate using an antenna of a type and maximum (or lesser) gain approved for the transmitter by Industry Canada. To reduce potential radio interference to other users, the antenna type and its gain must be so chosen that the equivalent isotropically radiated power (e.i.r.p.) is not more than that necessary for successful communication.

Conformément à la réglementation d'Industrie Canada, le présent émetteur radio peut fonctionner avec une antenne d'un type et d'un gain maximal (ou inférieur) approuvé pour l'émetteur par Industrie Canada. Dans le but de réduire les risques de brouillage radioélectrique à l'intention des autres utilisateurs, il faut choisir le type d'antenne et son gain de sorte que la puissance isotrope rayonnée équivalente (p.i.r.e.) ne dépasse pas l'intensité nécessaire à l'établissement d'une communication satisfaisante.

10.2.2 RF EXPOSURE

All transmitters regulated by the Innovation, Science and Economic Development Canada (ISED) must comply with RF exposure requirements listed in RSS-102 - Radio Frequency (RF) Exposure Compliance of Radio communication Apparatus (All Frequency Bands).

This transmitter is restricted for use with a specific antenna tested in this application for certification, and must not be co-located or operating in conjunction with any other antenna or transmitters within a host device, except in accordance with Innovation, Science and Economic Development Canada multi-transmitter guidelines.

The installation of the transmitter must ensure compliance is demonstrated according to the ISED SAR procedures.

10.2.3 HELPFUL WEB SITES

Innovation, Science and Economic Development Canada (ISED): http://www.ic.gc.ca/.

10.3 Europe

The RN4870/71 module is an Radio Equipment Directive (RED) assessed radio module that is CE marked and has been manufactured and tested with the intention of being integrated into a final product.

The RN4870/71 module has been tested to RED 2004/53/EC Essential Requirements for Health and Safety (Article (3.1(a)), Electromagnetic Compatibility (EMC) (Article 3.1(b)), and Radio (Article 3.2), which are summarized in the following European Compliance Testing tables.

The ETSI provides guidance on modular devices in the "*Guide to the application of harmonised standards covering Article 3.1(b) and Article 3.2 of the Directive 2014/53/EU RED to multi-radio and combined radio and non-radio equipment*" document available at http://www.etsi.org/deliver/etsi_eg/203300_203399/203367/01.01.01_60/eg_203367v010101p.pdf.

Note:	To maintain conformance to the testing listed in Table 10-1/Table 10-2, the module shall be installed in accordance with the installation instructions in this data sheet and shall not be modified. When integrating a radio module into a completed product, the integrator becomes the manufacturer of the final product and is therefore responsible for demonstrating compliance of the final product with the essential requirements against the RED.

10.3.1 LABELING AND USER INFORMATION REQUIREMENTS

The label on the final product which contains the RN4870/71 module must follow CE marking requirements.

TABLE 10-1: EUROPEAN COMPLIANCE TESTING (RN4870 MODULE)

Certification	Standards	Article	Laboratory	Report Number	Date
Safety	EN60950-1:2006/A11:2009/ A1:2010/A12:2011/A2:2013	[3.1(a)]	TUV Rheinland Taiwan	10051261 003	2016-01-05
Health	EN300328 V1.9.1/ EN62479:2010			10053580 001	2015-12-10
EMC	EN301489-1 V1.9.2	[3.1(b)]		10051137 002	2016-01-08
	EN301489-17 V2.2.1				
	EN301489-1 V2.1.1 EN301489-17 V2.2.0			10051137 003	2017-05-26
	EN301489-17 V3.1.1 EN301489-17 V3.2.0				
Radio	EN300328 V1.9.1	(3.2)		10053580 001	2015-12-10
				50067510 001(1)	2016-01-04
	EN300328 V2.1.1			50067510 002	2017-05-26

Note 1: RF reports apply only to modules using the part IS1870SF-202.

TABLE 10-2: EUROPEAN COMPLIANCE TESTING (RN4871 MODULE)

Certification	Standards	Article	Laboratory	Report Number	Date
Safety	EN60950-1:2006/A11:2009/ A1:2010/A12:2011/A2:2013	[3.1(a)]	TUV Rheinland Taiwan	10053210 001	2016-01-07
Health	EN300328 V1.9.1/ EN62479:2010			10053433 001	2015-12-29
EMC	EN301489-1 V1.9.2	[3.1(b)]		10052964 001	2015-10-22
	EN301489-17 V2.2.1				
	EN301489-1 V2.1.1 EN301489-1 V2.2.0			10052964 002	2017-05-26
	EN301489-17 V3.1.1 EN301489-17 V3.2.0				
Radio	EN300328 V1.9.1	(3.2)		10053433 001	2015-12-29
				50067509 001(1)	2017-04-10
	EN300328 V2.1.1			50067509 002	2017-05-26

Note 1: RF reports apply only to modules using the part IS1871SF-202.

10.3.2 CONFORMITY ASSESSMENT

From ETSI Guidance Note EG 203367, section 6.1 Non-radio products are combined with a radio product:

If the manufacturer of the combined equipment installs the radio product in a host non-radio product in equivalent assessment conditions (i.e. host equivalent to the one used for the assessment of the radio product) and according to the installation instructions for the radio product, then no additional assessment of the combined equipment against article 3.2 of the RED is required.

The European Compliance Testing listed in Table 10-1 and Table 10-2 are performed using the integral ceramic chip antenna.

10.3.2.1 SIMPLIFIED EU DECLARATION OF CONFORMITY

Hereby, Microchip Technology Inc. declares that the radio equipment type RN4870/71 is in compliance with Directive 2014/53/EU.

The full text of the EU declaration of conformity, for this product, is available at: http://www.microchip.com/design-centers/wireless-connectivity

© 2016-2019 Microchip Technology Inc.

10.3.3 HELPFUL WEB SITES

A document that can be used as a starting point in understanding the use of Short Range Devices (SRD) in Europe is the European Radio Communications Committee (ERC) Recommendation 70-03 E, which can be downloaded from the European Radio Communications Committee (ECC) at: http://www.ecodocdb.dk/.

Additional helpful web sites are:

- Radio Equipment Directive (2014/53/EU): https://ec.europa.eu/growth/single-market/european-standards/harmonised-standards/red_en
- European Conference of Postal and Telecommunications Administrations (CEPT): http://www.cept.org
- European Telecommunications Standards Institute (ETSI): http://www.etsi.org
- The Radio Equipment Directive Compliance Association (REDCA): http://www.redca.eu/

10.4 Japan

The RN4870/71 module has received type certification and is labeled with its own technical conformity mark and certification number as required to conform to the technical standards regulated by the Ministry of Internal Affairs and Communications (MIC) of Japan pursuant to the Radio Act of Japan.

Integration of this module into a final product does not require additional radio certification provided installation instructions are followed and no modifications of the module are allowed. Additional testing may be required:

- If the host product is subject to electrical appliance safety (for example, powered from an AC mains), the host product may require Product Safety Electrical Appliance and Material (PSE) testing. The integrator should contact their conformance laboratory to determine if this testing is required.
- There is a voluntary Electromagnetic Compatibility (EMC) test for the host product administered by VCCII: http://www.vcci.jp/vcci_e/index.html

10.4.1 LABELING AND USER INFORMATION REQUIREMENTS

The label on the final product which contains the RN4870/71 module must follow Japan marking requirements. The integrator of the module should refer to the labeling requirements for Japan available at the Ministry of Internal Affairs and Communications (MIC) website.

The RN4870 module is labeled with its own technical conformity mark and certification number. The final product in which this module is being used must have a label referring to the type certified module inside:

Contains transmitter module with certificate number:

202-SMD069

Due to the limited size of the RN4871, the technical conformity mark and certification number is not displayed on the module. Therefore, the final product in which this module is being used must have a label referring to the type certified module inside:

Contains transmitter module with certificate number:

005-101150

10.4.2 HELPFUL WEB SITES

Ministry of Internal Affairs and Communications (MIC): http://www.tele.soumu.go.jp/e/index.htm

Association of Radio Industries and Businesses (ARIB): http://www.arib.or.jp/english/

10.5 Korea

The RN4870/71 module has received certification of conformity in accordance with the Radio Waves Act. Integration of this module into a final product does not require additional radio certification provided installation instructions are followed and no modifications of the module are allowed.

10.5.1 LABELING AND USER INFORMATION REQUIREMENTS

The label on the final product which contains the RN4870/71 module must follow KC marking requirements. The integrator of the module should refer to the labeling requirements for Korea available on the Korea Communications Commission (KCC) website.

The RN4870 module is labeled with its own KC mark. The final product requires the KC mark and certificate number of the module:

MSIP-CRM-mcp-BM70BLES1FC2

Due to the limited size of the RN4871, the KC mark is not displayed on the module. Therefore, final product requires the KC mark and certificate number of the module:

MSIP-CRM-mcp-BM71BLES1FC2

10.5.2 HELPFUL WEB SITES

Korea Communications Commission (KCC): http://www.kcc.go.kr.

National Radio Research Agency (RRA): http://rra.go.kr.

10.6 Taiwan

The RN4870/71 module has received compliance approval in accordance with the Telecommunications Act. Customers seeking to use the compliance approval in their product should contact Microchip Technology sales or distribution partners to obtain a Letter of Authority.

Integration of this module into a final product does not require additional radio certification provided installation instructions are followed and no modifications of the module are allowed.

10.6.1 LABELING AND USER INFORMATION REQUIREMENTS

The RN4870 module is labeled with its own NCC ID number, and if the NCC ID is not visible when the module is installed inside another device, then the outside of the device must also display a label referring to the enclosed module. This exterior label can use wording such as the following:

CCAN15LP0501T3

Due to the limited size of the RN4871, the NCC ID is not displayed on the module. Therefore, the outside of the device must also display a label referring to the enclosed module. This exterior label can use wording such as the following:

CCAN16LP0011T7

The user's manual should contain below warning (for RF device) in traditional Chinese:

注意！
依據 低功率電波輻射性電機管理辦法
第十二條 經型式認證合格之低功率射頻電機，
非經許可，
公司、商號或使用者均不得擅自變更頻率、加大功率或變更原設計
之特性及功能。
第十四條 低功率射頻電機之使用不得影響飛航安全及干擾合法通信；
經發現有干擾現象時，應立即停用，並改善至無干擾時方得繼續使用。
前項合法通信，指依電信規定作業之無線電信。
低功率射頻電機須忍受合法通信或工業、科學及醫療用電波輻射性
電機設備之干擾。

10.6.2 HELPFUL WEB SITES

National Communications Commission (NCC): http://www.ncc.gov.tw.

10.7 China

The RN4870/71 module has received certification of conformity in accordance with the China MIIT Notice 2014-01 of State Radio Regulation Committee (SRRC) certification scheme. Integration of this module into a final product does not require additional radio certification, provided installation instructions are followed and no modifications of the module are allowed.

10.7.1 LABELING AND USER INFORMATION REQUIREMENTS

The RN4870 module is labeled with its own CMIT ID as follows:

CMIIT ID: 2016DJ5729

The RN4871 module is labeled with its own CMIT ID as follows::

CMIIT ID: 2016DJ5890

10.8 Other Regulatory Jurisdictions

Should other regulatory jurisdiction certification be required by the customer, or the customer need to recertify the module for other reasons, a certification utility is available. For further regulatory Certification Utility and documentation, contact your local Microchip Technology sales office.

© 2016-2019 Microchip Technology Inc.

10.9 Other Regulatory Information

- For information about other countries jurisdictions not covered here, refer to the http://www.microchip.com/design-centers/wireless-connectivity.
- Should other regulatory jurisdiction certification be required by the customer, or the customer needs to recertify the module for other reasons, contact Microchip for the required utilities and documentation.

11.0 ORDERING INFORMATION

Table 11-1 provides ordering information for the RN4870/71 module.

TABLE 11-1: ORDERING INFORMATION

Part Number(1)	Antenna	Shielding	Number of Pins	Operating Temperature Range
RN4870-V/RMXXX	On-Board	Yes	33	-20°C to +70°C
RN4870U-V/RMXXX	External	No	30	-20°C to +70°C
RN4871-V/RMXXX	On-Board	Yes	16	-20°C to +70°C
RN4871U-V/RMXXX	External	No	17	-20°C to +70°C
RN4870-I/RMXXX	On-Board	Yes	33	-40°C to +85°C
RN4871-I/RMXXX	On-Board	Yes	16	-40°C to +85°C

Note 1: The last three digits in P/N indicate firmware version. At the time of publication, the latest firmware version is 1.30. Ensure to check product webpage for latest part number and firmware version.

Go to http://www.microchip.com for current pricing and a list of distributors carrying Microchip products.

APPENDIX A: REVISION HISTORY

Revision A (April 2016)

This is the initial release of this document.

Revision B (October 2017)

- Added the new parts, RN4870-I/RMXXX and RN4871-I/RMXXX, released with increased operating temperature range.
- Updated Features section and removed Description section on page 1.
- Updated Table 1-1, Table 1-2, Table 1-4 and Table 11-1.
- Revised Table 2-1 through Table 2-4.
- Updated Figure 1-4, Figure 3-1, Figure 3-2, and Figure 4-7.
- Added **Section 10.7 "China"** to **Section 10.0 "Regulatory Approval"**;
- Updated Table 11-1 and **Section "Product Identification System"**.

Revision C (December 2017)

- Updated Table 2-1 to correct information for the operating temperature range.

Revision D (April 2019)

- Updated Bluetooth version from 4.2 to 5.0.
- Updated **Features and Antenna Options**.
- Updated Figure 5-2, Figure 5-3, Figure 5-4, and Figure 5-5.
- Updated Figure 9-1 and Figure 9-2 (P2_0 = 1)
- Updated **Section 7.0 "Supported Services"**
- Updated **Section 10.2 "Canada"** and **Section 10.3 "Europe"**

© 2016-2019 Microchip Technology Inc.

THE MICROCHIP WEBSITE

Microchip provides online support via our WWW site at www.microchip.com. This website is used as a means to make files and information easily available to customers. Accessible by using your favorite Internet browser, the website contains the following information:

- **Product Support** – Data sheets and errata, application notes and sample programs, design resources, user's guides and hardware support documents, latest software releases and archived software
- **General Technical Support** – Frequently Asked Questions (FAQ), technical support requests, online discussion groups, Microchip consultant program member listing
- **Business of Microchip** – Product selector and ordering guides, latest Microchip press releases, listing of seminars and events, listings of Microchip sales offices, distributors and factory representatives

CUSTOMER CHANGE NOTIFICATION SERVICE

Microchip's customer notification service helps keep customers current on Microchip products. Subscribers will receive e-mail notification whenever there are changes, updates, revisions or errata related to a specified product family or development tool of interest.

To register, access the Microchip website at www.microchip.com. Under "Support", click on "Customer Change Notification" and follow the registration instructions.

CUSTOMER SUPPORT

Users of Microchip products can receive assistance through several channels:

- Distributor or Representative
- Local Sales Office
- Field Application Engineer (FAE)
- Technical Support

Customers should contact their distributor, representative or Field Application Engineer (FAE) for support. Local sales offices are also available to help customers. A listing of sales offices and locations is included in the back of this document.

Technical support is available through the website at: http://microchip.com/support

PRODUCT IDENTIFICATION SYSTEM

To order or obtain information, for example, on pricing or delivery, refer to the factory or the listed sales office.

PART NO.	V	RM	XXX
Device	Temperature Range	Package	Firmware Revision Number

Device:	RN4870:	Ceramic Chip Antenna		
	RN4870U:	External Antenna		
	RN4871:	Ceramic Chip Antenna		
	RN4871U:	External Antenna		
Temperature Range:	V	= -20°C to +70°C	(Various)	
	I	= -40°C to +85°C	(Industrial)	
Package:	RM	= Radio Module		

Example:

RN4870-V/RM118: Various temperature

RN4870-I/RM128: Industrial temperature

Note 1: Tape and Reel identifier only appears in the catalog part number description. This identifier is used for ordering purposes and is *not* printed on the device package. Check with your Microchip Sales Office for package availability with the Tape and Reel option.

© 2016-2019 Microchip Technology Inc.

Note the following details of the code protection feature on Microchip devices:

- Microchip products meet the specification contained in their particular Microchip Data Sheet.
- Microchip believes that its family of products is one of the most secure families of its kind on the market today, when used in the intended manner and under normal conditions.
- There are dishonest and possibly illegal methods used to breach the code protection feature. All of these methods, to our knowledge, require using the Microchip products in a manner outside the operating specifications contained in Microchip's Data Sheets. Most likely, the person doing so is engaged in theft of intellectual property.
- Microchip is willing to work with the customer who is concerned about the integrity of their code.
- Neither Microchip nor any other semiconductor manufacturer can guarantee the security of their code. Code protection does not mean that we are guaranteeing the product as "unbreakable."

Code protection is constantly evolving. We at Microchip are committed to continuously improving the code protection features of our products. Attempts to break Microchip's code protection feature may be a violation of the Digital Millennium Copyright Act. If such acts allow unauthorized access to your software or other copyrighted work, you may have a right to sue for relief under that Act.

Information contained in this publication regarding device applications and the like is provided only for your convenience and may be superseded by updates. It is your responsibility to ensure that your application meets with your specifications. MICROCHIP MAKES NO REPRESENTATIONS OR WARRANTIES OF ANY KIND WHETHER EXPRESS OR IMPLIED, WRITTEN OR ORAL, STATUTORY OR OTHERWISE, RELATED TO THE INFORMATION, INCLUDING BUT NOT LIMITED TO ITS CONDITION, QUALITY, PERFORMANCE, MERCHANTABILITY OR FITNESS FOR PURPOSE. Microchip disclaims all liability arising from this information and its use. Use of Microchip devices in life support and/or safety applications is entirely at the buyer's risk, and the buyer agrees to defend, indemnify and hold harmless Microchip from any and all damages, claims, suits, or expenses resulting from such use. No licenses are conveyed, implicitly or otherwise, under any Microchip intellectual property rights unless otherwise stated.

Microchip received ISO/TS-16949:2009 certification for its worldwide headquarters, design and wafer fabrication facilities in Chandler and Tempe, Arizona; Gresham, Oregon and design centers in California and India. The Company's quality system processes and procedures are for its PIC® MCUs and dsPIC® DSCs, KEELOQ® code hopping devices, Serial EEPROMs, microperipherals, nonvolatile memory and analog products. In addition, Microchip's quality system for the design and manufacture of development systems is ISO 9001:2000 certified.

QUALITY MANAGEMENT SYSTEM CERTIFIED BY DNV

ISO/TS 16949

Trademarks

The Microchip name and logo, the Microchip logo, AnyRate, AVR, AVR logo, AVR Freaks, BitCloud, chipKIT, chipKIT logo, CryptoMemory, CryptoRF, dsPIC, FlashFlex, flexPWR, Heldo, JukeBlox, KeeLoq, Kleer, LANCheck, LINK MD, maXStylus, maXTouch, MediaLB, megaAVR, MOST, MOST logo, MPLAB, OptoLyzer, PIC, picoPower, PICSTART, PIC32 logo, Prochip Designer, QTouch, SAM-BA, SpyNIC, SST, SST Logo, SuperFlash, tinyAVR, UNI/O, and XMEGA are registered trademarks of Microchip Technology Incorporated in the U.S.A. and other countries.

ClockWorks, The Embedded Control Solutions Company, EtherSynch, Hyper Speed Control, HyperLight Load, IntelliMOS, mTouch, Precision Edge, and Quiet-Wire are registered trademarks of Microchip Technology Incorporated in the U.S.A.

Adjacent Key Suppression, AKS, Analog-for-the-Digital Age, Any Capacitor, AnyIn, AnyOut, BodyCom, CodeGuard, CryptoAuthentication, CryptoAutomotive, CryptoCompanion, CryptoController, dsPICDEM, dsPICDEM.net, Dynamic Average Matching, DAM, ECAN, EtherGREEN, In-Circuit Serial Programming, ICSP, INICnet, Inter-Chip Connectivity, JitterBlocker, KleerNet, KleerNet logo, memBrain, Mindi, MiWi, motorBench, MPASM, MPF, MPLAB Certified logo, MPLIB, MPLINK, MultiTRAK, NetDetach, Omniscient Code Generation, PICDEM, PICDEM.net, PICkit, PICtail, PowerSmart, PureSilicon, QMatrix, REAL ICE, Ripple Blocker, SAM-ICE, Serial Quad I/O, SMART-I.S., SQI, SuperSwitcher, SuperSwitcher II, Total Endurance, TSHARC, USBCheck, VariSense, ViewSpan, WiperLock, Wireless DNA, and ZENA are trademarks of Microchip Technology Incorporated in the U.S.A. and other countries.

SQTP is a service mark of Microchip Technology Incorporated in the U.S.A.

Silicon Storage Technology is a registered trademark of Microchip Technology Inc. in other countries.

GestIC is a registered trademark of Microchip Technology Germany II GmbH & Co. KG, a subsidiary of Microchip Technology Inc., in other countries.

All other trademarks mentioned herein are property of their respective companies.

© 2018, Microchip Technology Incorporated, All Rights Reserved.

ISBN: 978-1-5224-4453-4

Worldwide Sales and Service

AMERICAS

Corporate Office
2355 West Chandler Blvd.
Chandler, AZ 85224-6199
Tel: 480-792-7200
Fax: 480-792-7277
Technical Support:
http://www.microchip.com/support
Web Address:
www.microchip.com

Atlanta
Duluth, GA
Tel: 678-957-9614
Fax: 678-957-1455

Austin, TX
Tel: 512-257-3370

Boston
Westborough, MA
Tel: 774-760-0087
Fax: 774-760-0088

Chicago
Itasca, IL
Tel: 630-285-0071
Fax: 630-285-0075

Dallas
Addison, TX
Tel: 972-818-7423
Fax: 972-818-2924

Detroit
Novi, MI
Tel: 248-848-4000

Houston, TX
Tel: 281-894-5983

Indianapolis
Noblesville, IN
Tel: 317-773-8323
Fax: 317-773-5453
Tel: 317-536-2380

Los Angeles
Mission Viejo, CA
Tel: 949-462-9523
Fax: 949-462-9608
Tel: 951-273-7800

Raleigh, NC
Tel: 919-844-7510

New York, NY
Tel: 631-435-6000

San Jose, CA
Tel: 408-735-9110
Tel: 408-436-4270

Canada - Toronto
Tel: 905-695-1980
Fax: 905-695-2078

ASIA/PACIFIC

Australia - Sydney
Tel: 61-2-9868-6733

China - Beijing
Tel: 86-10-8569-7000

China - Chengdu
Tel: 86-28-8665-5511

China - Chongqing
Tel: 86-23-8980-9588

China - Dongguan
Tel: 86-769-8702-9880

China - Guangzhou
Tel: 86-20-8755-8029

China - Hangzhou
Tel: 86-571-8792-8115

China - Hong Kong SAR
Tel: 852-2943-5100

China - Nanjing
Tel: 86-25-8473-2460

China - Qingdao
Tel: 86-532-8502-7355

China - Shanghai
Tel: 86-21-3326-8000

China - Shenyang
Tel: 86-24-2334-2829

China - Shenzhen
Tel: 86-755-8864-2200

China - Suzhou
Tel: 86-186-6233-1526

China - Wuhan
Tel: 86-27-5980-5300

China - Xian
Tel: 86-29-8833-7252

China - Xiamen
Tel: 86-592-2388138

China - Zhuhai
Tel: 86-756-3210040

ASIA/PACIFIC

India - Bangalore
Tel: 91-80-3090-4444

India - New Delhi
Tel: 91-11-4160-8631

India - Pune
Tel: 91-20-4121-0141

Japan - Osaka
Tel: 81-6-6152-7160

Japan - Tokyo
Tel: 81-3-6880- 3770

Korea - Daegu
Tel: 82-53-744-4301

Korea - Seoul
Tel: 82-2-554-7200

Malaysia - Kuala Lumpur
Tel: 60-3-7651-7906

Malaysia - Penang
Tel: 60-4-227-8870

Philippines - Manila
Tel: 63-2-634-9065

Singapore
Tel: 65-6334-8870

Taiwan - Hsin Chu
Tel: 886-3-577-8366

Taiwan - Kaohsiung
Tel: 886-7-213-7830

Taiwan - Taipei
Tel: 886-2-2508-8600

Thailand - Bangkok
Tel: 66-2-694-1351

Vietnam - Ho Chi Minh
Tel: 84-28-5448-2100

EUROPE

Austria - Wels
Tel: 43-7242-2244-39
Fax: 43-7242-2244-393

Denmark - Copenhagen
Tel: 45-4450-2828
Fax: 45-4485-2829

Finland - Espoo
Tel: 358-9-4520-820

France - Paris
Tel: 33-1-69-53-63-20
Fax: 33-1-69-30-90-79

Germany - Garching
Tel: 49-8931-9700

Germany - Haan
Tel: 49-2129-3766400

Germany - Heilbronn
Tel: 49-7131-67-3636

Germany - Karlsruhe
Tel: 49-721-625370

Germany - Munich
Tel: 49-89-627-144-0
Fax: 49-89-627-144-44

Germany - Rosenheim
Tel: 49-8031-354-560

Israel - Ra'anana
Tel: 972-9-744-7705

Italy - Milan
Tel: 39-0331-742611
Fax: 39-0331-466781

Italy - Padova
Tel: 39-049-7625286

Netherlands - Drunen
Tel: 31-416-690399
Fax: 31-416-690340

Norway - Trondheim
Tel: 47-7288-4388

Poland - Warsaw
Tel: 48-22-3325737

Romania - Bucharest
Tel: 40-21-407-87-50

Spain - Madrid
Tel: 34-91-708-08-90
Fax: 34-91-708-08-91

Sweden - Gothenberg
Tel: 46-31-704-60-40

Sweden - Stockholm
Tel: 46-8-5090-4654

UK - Wokingham
Tel: 44-118-921-5800
Fax: 44-118-921-5820

© 2019 Microchip Technology Inc.

SYST-30AXGZ143 - Data Sheet - RN4870/71 Bluetooth Low Energy Module Data Sheet

Affected Catalog Part Numbers(CPN)

RN4870-I/RM128
RN4870-I/RM130
RN4870-V/RM118
RN4870U-V/RM118
RN4871-I/RM128
RN4871-I/RM130
RN4871-V/RM118
RN4871-V/RM130
RN4871U-V/RM118

RN4870/71

Bluetooth® Low Energy Module

Features

- Qualified for Bluetooth SIG v5.0 Core Specification
- Certified to FCC, ISED, CE, KCC, NCC and SRRC
- On-Board Bluetooth Low Energy (BLE) Stack
- ASCII Command Interface API over UART
- Scripting Engine for Hostless Operation
- Compact Form Factor – The RN4870/71 family comes in four different sizes from 6 mm x 8 mm to 12 mm x 22 mm:
  - RN4870: 12 mm x 22 mm
  - RN4871: 9 mm x 11.5 mm
  - RN4870U: 12 mm x 15 mm
  - RN4871U: 6 mm x 8 mm
- Beacon Private Service for Beacon Services
- UART Transparent Service for Serial Data Applications
- Remote Configuration Over-the-Air

Operational

- Operating Voltage: 1.9V to 3.6V (3.3V typical)
- Temperature Range:
  - -20°C to +70°C (Normal)
  - -40°C to +85°C (Industrial)
- Supports UART
- Up to Three Pulse Width Modulation (PWM) Outputs (only for RN4870)

RF/Analog Features

- ISM Band 2.402 to 2.480 GHz Operation
- Channels: 0-39
- RX Sensitivity: -90 dBm
- TX Power: 0 dBm
- RSSI Monitor

MAC/Baseband/Higher Layer Features

- Secure AES128 Encryption
- GAP, GATT, SM, L2CAP and Integrated Public Profiles
- Customer Can Create up to Five Public and Four Private Services
- Keyboard I/O Authentication
- Software Configurable Role as Peripheral or Central and Client or Server

Antenna Options

- Chip Antenna Range based on Open Air Measurements and Phone-Module Connection:
  - RN4870: Up to 50 m
  - RN4871: Up to 10 m
- External Antenna Connection via RF Pad (RN4870U/RN4871U)

Applications

- Health/Medical Devices
- Sports Activity/Fitness Meters
- Beacon Applications
- Internet of Things (IoT) Sensor Tag
- Remote Control
- Wearable Smart Devices and Accessories
- Smart Energy/Smart Home
- Industrial Control

© 2016-2019 Microchip Technology Inc.

Table of Contents

1.0 Device Overview 3
2.0 Specifications 11
3.0 Interface PINs 13
4.0 Physical Dimensions And Attributes 15
5.0 Application Reference Circuits 25
6.0 ASCII Command API 29
7.0 Supported Services 31
8.0 Antenna Characteristics 33
9.0 Timing Characteristics 35
10.0 Regulatory Approval 37
11.0 Ordering Information 45
The Microchip WebSite 47
Customer Change Notification Service 47
Customer Support 47
Product Identification System 49

TO OUR VALUED CUSTOMERS

It is our intention to provide our valued customers with the best documentation possible to ensure successful use of your Microchip products. To this end, we will continue to improve our publications to better suit your needs. Our publications will be refined and enhanced as new volumes and updates are introduced.

If you have any questions or comments regarding this publication, please contact the Marketing Communications Department via E-mail at **docerrors@microchip.com**. We welcome your feedback.

Most Current Data Sheet

To obtain the most up-to-date version of this data sheet, please register at our Worldwide Web site at:

http://www.microchip.com

You can determine the version of a data sheet by examining its literature number found on the bottom outside corner of any page. The last character of the literature number is the version number, (e.g., DS30000000A is version A of document DS30000000).

Errata

An errata sheet, describing minor operational differences from the data sheet and recommended workarounds, may exist for current devices. As device/documentation issues become known to us, we will publish an errata sheet. The errata will specify the revision of silicon and revision of document to which it applies.

To determine if an errata sheet exists for a particular device, please check with one of the following:

- Microchip's Worldwide Web site; **http://www.microchip.com**
- Your local Microchip sales office (see last page)

When contacting a sales office, please specify which device, revision of silicon and data sheet (include literature number) you are using.

Customer Notification System

Register on our web site at **www.microchip.com** to receive the most current information on all of our products.

© 2016-2019 Microchip Technology Inc.

1.0 DEVICE OVERVIEW

1.1 Overview

The RN4870/71 BLE module integrates Bluetooth 5.0 baseband controller, on-board Bluetooth stack, digital and analog I/O, and RF power amplifier into one solution.

Table 1-1 shows the various options for packaging and features available in the RN4870/71 family. Table 1-2 provides the description of the pin functions for all the modules in the RN4870/71 family. Figure 1-1 through Figure 1-4 show the pinout for the different modules.

TABLE 1-1: RN4870/71 FAMILY

Part Number(1)	Antenna On-Board	Shielding	Number of Pins	Dimensions	Operating Temperature Range
RN4870-V/RMXXX	Yes	Yes	33	12 mm x 22 mm	-20°C to +70°C
RN4870U-V/RMXXX	No	No	30	12 mm x 15 mm	-20°C to +70°C
RN4871-V/RMXXX	Yes	Yes	16	9 mm x 11.5 mm	-20°C to +70°C
RN4871U-V/RMXXX	No	No	17	6 mm x 8 mm	-20°C to +70°C
RN4870-I/RMXXX	Yes	Yes	33	12 mm x 22 mm	-40°C to +85°C
RN4871-I/RMXXX	Yes	Yes	16	9 mm x 11.5 mm	-40°C to +85°C

Note 1: The last three digits in P/N indicate the firmware version. At the time of publication, the latest firmware version is 1.28. Ensure to check product webpage for latest part number and firmware version.

TABLE 1-2: PIN DESCRIPTION

RN4870U	RN4870	RN4871U	RN4871	Name	Type	Description
—	1	—	—	GND	Power	Ground reference
—	2	—	—	GND	Power	Ground reference
1	3	12	13	GND	Power	Ground reference
2	4	11	14	VBAT	Power	Positive supply input. Range: 1.9V~3.6V
—	—	10	—	BK_IN	Power	Buck power supply input Can be connected to the VBAT pin Connect to 10 µF low ESR ceramic capacitor Voltage range: 1.9V to 3.6V
3	5	—	—	P2_2	D I/O	GPIO PWM1 (only for RN4870) Default: Input; pulled-high
4	6	—	—	VDD_IO	Power	VDD; power input Same input pin as VBAT Can be connected to the VBAT pin
5	7	—	—	VDD_IO	Power	VDD; power input Same input pin as VBAT Can be connected to the VBAT pin
6	8	—	—	ULPC_O	Power	1.2V ULPC LDO output Used for diagnostic purposes *Do not connect* to any pin or device For measurement, connect a bypass 1 µF capacitor to ground
7	9	—	—	P2_3	D I/O	GPIO PWM2 (only for RN4870) Default: Input; pulled-high
8	10	—	—	BK_O	Power	1.55V Buck power supply output for diagnostic purpose *Do not connect*

TABLE 1-2: PIN DESCRIPTION (CONTINUED)

RN4870U	RN4870	RN4871U	RN4871	Name	Type	Description
—	—	13	6	P1_6	D	Configurable pin. Refer to **Section 1.2 "Module Configuration"** for details. When connected to host MCU, set the pin connected to pin P1_6 in either high impedance or drive pin low during firmware start-up (approximately 22 msec).
—	—	14	5	P1_7	D	Configurable pin. Refer to **Section 1.2 "Module Configuration"** for details.
9	11	15	15	P2_7	D O/p	UART_TX_IND output pin. Provides indication if RN4870 is transmitting to host MCU over UART. Pulled low before UART TX begins and pulled high after UART TX is over.
10	12	—	—	P1_1	D I/O A I/p	GPIO; default: Input; pulled-high AD9 Configured as the BLEDK_STATUS1_IND pin by default
11	13	2	3	P1_2	D I/O A I/p	GPIO; default: Input; pulled-high AD10; I^2C SCL pin
12	14	3	4	P1_3	D I/O	GPIO; default: Input; pulled-high AD11; I^2C SDA pin
13	15	8	11	P0_0	D I/O	GPIO; default: Input; pulled-high AD0 Configured as the UART_CTS pin by default
14	16	—	—	P1_0	D I/O	GPIO; default: Input; pulled-high AD8 Configured as the BLEDK_STATUS2_IND pin by default
15	17	6	9	P3_6	D I/O	GPIO; default: Input; pulled-high (only for RN4870) Configured as the UART_RTS pin by default
16	18	16	16	P2_0	D I/p	System configuration input; 1: Application mode 0: Test mode/Flash update/EEPROM configuration Default: Input; pulled-high
17	19	—	—	P2_4	D I/O	GPIO; default: Input; pulled-high
18	20	—	—	NC	—	No Connection
19	21	7	10	RST_N	D I/p	Module Reset; active-low; Internally pulled-high
20	22	5	7	UART_RX	D I/p	UART Data input
21	23	4	8	UART_TX	D O/p	UART Data output
22	24	—	—	P3_1	D I/O	GPIO; default: Input; pulled-high Configured as RSSI_IND pin by default; SPI NCS Bus
23	25	—	—	P3_2	D I/p	GPIO; default: Input; pulled-high Configured as the LINK_DROP pin by default; SPI MISO pin
24	26	—	—	P3_3	D I/p	GPIO; default: Input; pulled-high Configured as the UART RX Indication pin by default; SPI MOSI pin
25	27	—	—	P3_4	D I/p	GPIO; default: Input; pulled-high Configured as the PAIRING_KEY pin by default; SPI SCLK pin

© 2016-2019 Microchip Technology Inc.

TABLE 1-2: PIN DESCRIPTION (CONTINUED)

RN4870U	RN4870	RN4871U	RN4871	Name	Type	Description
26	28	—	—	P3_5	D I/O A I/p	GPIO; default: Input; pulled-high LED1; provides indication whether the module is ON/OFF
27	29	—	—	P0_7	D I/O	GPIO; default: Input; pulled-high Configured to the LOW_BATTERY_INDICATOR pin by default
28	30	9	12	P0_2	D I/O	AD2 LED0: Provides indication whether the module is in ON/OFF mode
29	31	17	2	GND	Power	Ground Reference
—	32	—	—	GND	Power	Ground Reference
30	—	1	—	BT_RF	A I/O	External Antenna connection (50 ohms). Only for RN4870U and RN4871U. No connection for RN4871.
—	33	—	—	GND	Power	Ground Reference

Legend: Pin Type Abbreviations: A = Analog D = Digital I/O = Input/Output I/p = Input O/p = Output

FIGURE 1-1: PIN DIAGRAM - RN4870U

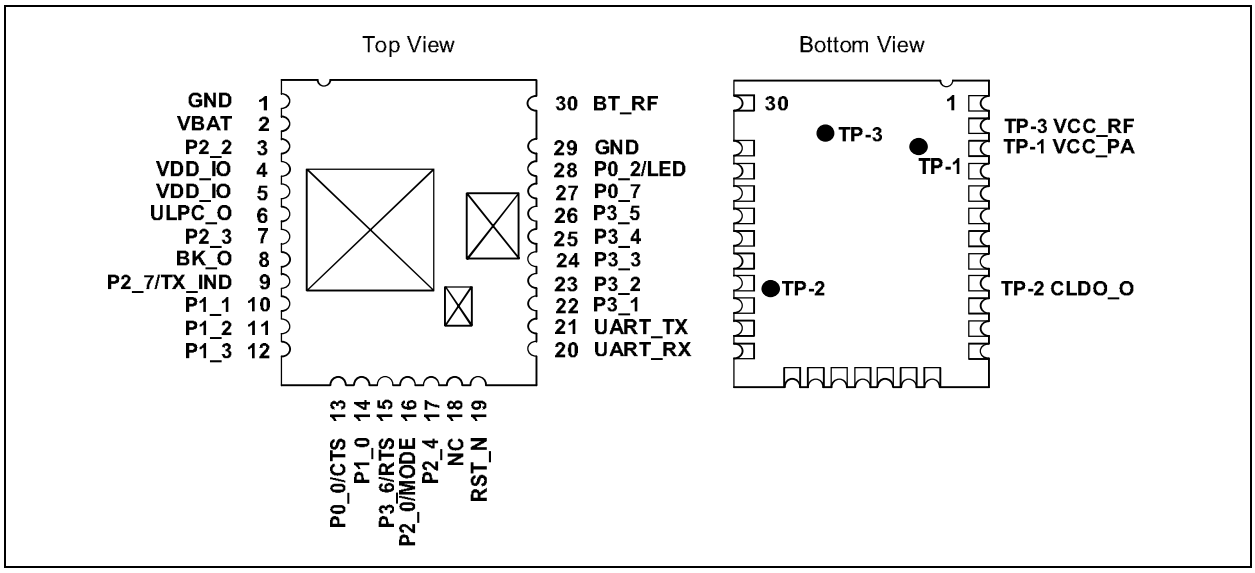

FIGURE 1-2: PIN DIAGRAM - RN4870

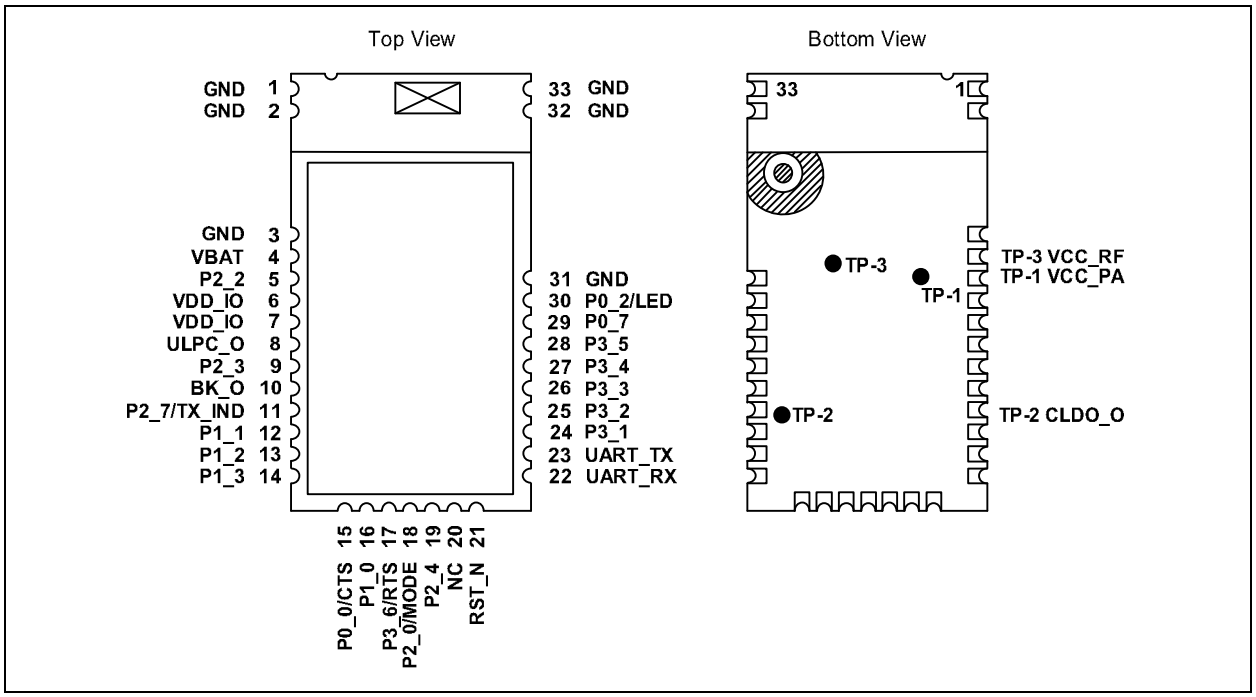

FIGURE 1-3: PIN DIAGRAM - RN4871U

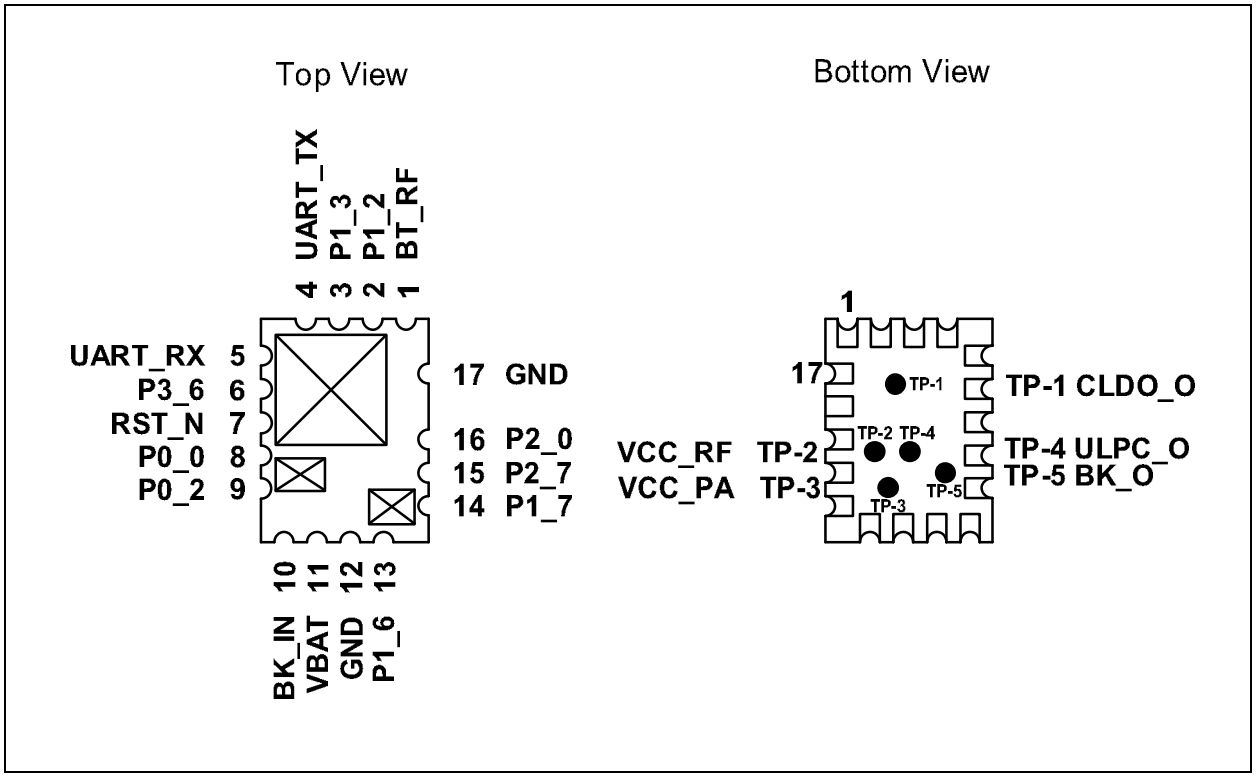

© 2016-2019 Microchip Technology Inc.

FIGURE 1-4: PIN DIAGRAM - RN4871

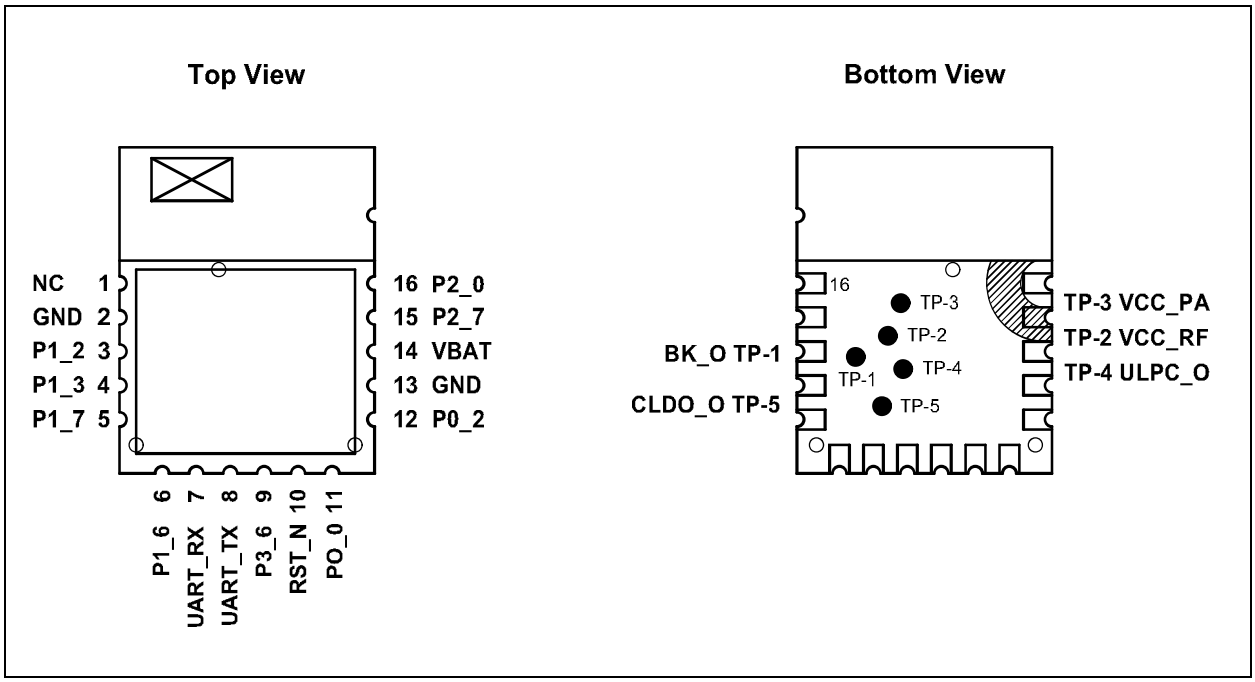

1.2 Module Configuration

The GPIO pins of the RN4870 and RN4871 modules can be configured to different functions using the ASCII command interface. Table 1-3 shows the various pins in the RN4870/71 module that are available for configuration and their default configuration settings. Table 1-4 provides details on each available function. Table 1-5 shows the status of the module as indicated by the Status 1 and Status 2 indication pins. Table 1-6 shows the details of test pads that are present on the bottom side of the module, used for diagnostic purposes during testing. Figure 1-5 shows all the key elements of the module.

TABLE 1-3: CONFIGURABLE PINS AND DEFAULT FUNCTIONS IN THE RN4870 AND RN4871

Pin Name	Available in		Default Function
	RN4870	RN4871	
P0_7	x	—	Low Battery Indication
P1_0	x	—	Status 2
P1_1	x	—	Status 1
P2_2	x	—	None
P2_4	x	—	None
P3_1	x	—	RSSI Indication
P3_2	x	—	Link Drop
P3_3	x	—	UART RX Indication
P3_4	x	—	Pairing Key
P3_5	x	—	None
P1_2	x	x	None
P1_3	x	x	None
P1_6	—	x	UART RX Indication
P1_7	—	x	None

TABLE 1-4: CONFIGURABLE FUNCTIONS AND DESCRIPTIONS

Function Name	Description
Low Battery Indication	Pin output goes low when the VDD is below a specified level. To set the threshold level, change the EEPROM settings.
Status 1	Use this indication pin along with the Status 2 pin to indicate the current status of the module. Refer to Table 1-5 for details of the status indication.
Status 2	Use this indication pin along with the Status 1 pin to indicate the current status of the module. Refer to Table 1-5 for details of the status indication.
RSSI Indication	Use this indication pin to indicate the quality of the link based on the RSSI level. If the RSSI level is lower than the specified threshold value, then the RSSI indication pin goes low. Set the threshold for the RSSI link quality in EEPROM.
Link Drop	When the RN4870/71 is connected to a remote device, the host MCU can use the Link Drop pin to force the module to disconnect the link and enter Shutdown state. The pin needs to be pulled low for at least 10 ms.
UART RX Indication	Use this pin to enable communication with the UART when the module is in Low-Power mode. When *not* in Low-Power mode, the module runs on a 16 MHz clock. If Low-Power mode is enabled on the module by using command `SO,1`, the module runs on a 32 kHz clock thus reducing power consumption. However, in Low-Power mode, the host MCU *cannot* communicate with the module via the UART since the UART is *not* operational. If the user intends to provide data or commands via UART in the Low-Power mode, then the UART RX INDICATION pin must be pulled low and the user needs to wait for at least five milliseconds before sending the data. Pulling the UART RX INDICATION pin low allows the module to operate the 16 MHz clock and to enable UART.

© 2016-2019 Microchip Technology Inc.

TABLE 1-4: CONFIGURABLE FUNCTIONS AND DESCRIPTIONS (CONTINUED)

Function Name	Description
Pairing Key	When the RN4870/71 is connected to a remote device, the host MCU can use the Pairing Key pin to force the module to disconnect the link and go back to Standby state. The pin must be pulled down for at least 160 ms.
RF Active Indication	Use this indication pin to indicate that the module is currently performing an active transmission and receiving BLE data.

TABLE 1-5: STATUS INDICATION PINS

Status 1	Status 2	State
High	High	Power On
High	Low	Standby state
Low	Low	Connection established
Low	High	Data session open (Transparent UART)

TABLE 1-6: TEST POINTS ON THE BOTTOM SIDE

RN4870U	RN4870	RN4871U	RN4871	Symbol	Description
TP-1	TP-1	TP-3	TP-3	VCC_PA	1.55V RF PA LDO
TP-2	TP-2	TP-1	TP-5	CLDO_O	1.2V CLDO Output
TP-3	TP-3	TP-2	TP-2	VCC_RF	1.2V RF LDO Output
—	—	TP-4	TP-4	ULPC_O	1.2V ULPC LDO Output
—	—	TP-5	TP-1	BK_O	1.55V Buck Reg Output

FIGURE 1-5: BLOCK DIAGRAM OF THE RN4870/71

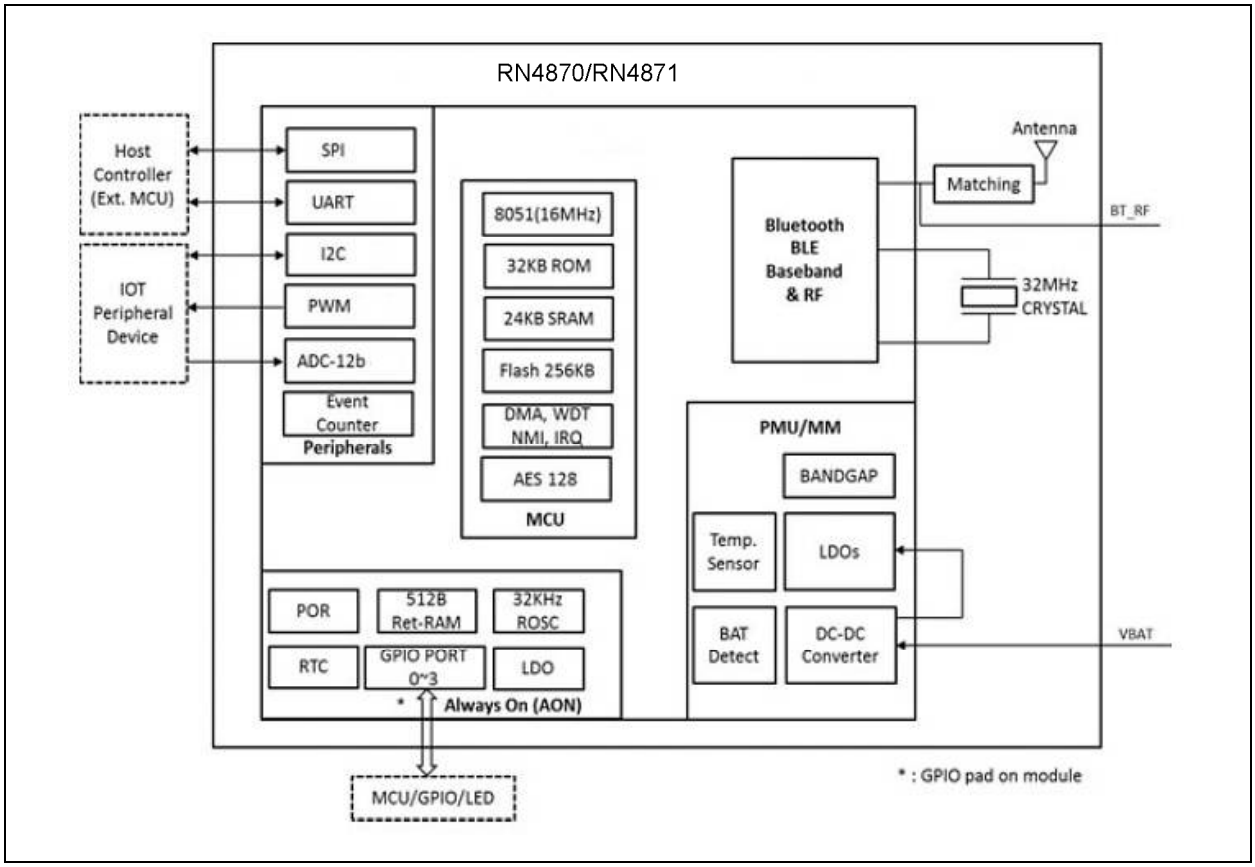

2.0 SPECIFICATIONS

Table 2-1 provides the general specifications for the module. Table 2-2, Table 2-3 and Table 2-4 provide the electrical characteristics and the current consumption of the module.

TABLE 2-1: GENERAL SPECIFICATIONS

Specification	Description
Standard Compliance	Bluetooth 5.0
Frequency Band	2.402 to 2.480 GHz
Modulation Method	GFSK
Maximum Data Rate (Transparent UART)	10 kbps (iOS®9)
Antenna	Ceramic
Interface	UART, AIO, PIO
Operating Range	1.9V to 3.6V
Sensitivity	-90 dBm
RF TX Power	0 dBm
Operating Temperature Range for RN4870-I and RN4871-I modules	-40°C to +85°C
Operating Temperature Range for RN4870-V and RN4871-V modules	-20°C to +70°C
Storage Temperature Range	-40°C to +125°C
Operating Relative Humidity Range	10% to 90%
Storage Relative Humidity Range	10% to 90%
Moisture Sensitivity Level	2

TABLE 2-2: ELECTRICAL CHARACTERISTICS

Parameter	Min.	Typ.	Max.	Units
Supply Voltage (V_{DD})	1.9	—	3.6	V
I/O Voltage Levels				
V_{IL} Input Logic Levels Low	V_{SS}	—	0.3 V_{DD}	V
V_{IH} Input Logic Levels High	0.7 V_{DD}	—	V_{DD}	V
V_{OL} Output Logic Levels Low	V_{SS}	—	0.2 V_{DD}	V
V_{OH} Output Logic Levels High	0.8 V_{DD}	—	V_{DD}	V
Reset				
Reset Low Duration	63	—	—	ns
Input and Tri-State Current with				
Pull-Up Resistance	34	48	74	kΩ
Pull-Down Resistance	29	47	86	kΩ

© 2016-2019 Microchip Technology Inc.

TABLE 2-3: CURRENT CONSUMPTION

Parameter	Min.	Typ.	Max.	Units
Supply Current				
TX mode Peak Current at V_{DD} = 3V, TX = 0 dBm, Buck mode	—	10 at +25°C	13 at +75°C/+85°C	mA
RX mode Peak Current at V_{DD} = 3V, Buck mode	—	10 at +25°C	13 at +75°C/+85°C	mA
Low-Power Mode Current(2)	—	60 at +25°C	—	µA
Shutdown Low-Power Mode	1	—	2.9	µA

Note 1: The current measurements are characterized across a sample of the RN4870/71 module at room temperature (+25°C), unless otherwise noted.

2: For more details on Low-Power mode, refer to the "*RN4870/71 Bluetooth® Low Energy Module User's Guide*" (DS50002466).

TABLE 2-4: CURRENT CONSUMPTION DURING APPLICATION MODE

Test Mode	Interval (ms)	Average Current Consumption
Advertising(1,2,3)	20	1.061 mA
	50	505 µA
	100	298 µA
	500	113 µA
	1000	89 µA
Connected(1,2,4)	18.75	2.23 mA
	50	2.13 mA
	100	2.10 mA
	500	83 µA
	1000	80 µA

Note 1: These measurements are done at an operating temperature of +25°C at 3.3V and are characterized across a sample of the RN4870/71 module.

2: Measurements taken with version 1.18 firmware loaded onto the module.

3: The advertising packet data payload is approximately 15 bytes in length.

4: The amount of data being transmitted between two peer devices can affect the average current measured. The average current measurements are done with only the necessary Bluetooth packets being exchanged to keep the connection active at the stated interval.

© 2016-2019 Microchip Technology Inc.

3.0 INTERFACE PINS

Figure 3-1 shows the power scheme using a 3.3V low-dropout regulator to the RN487x and a host MCU. This scheme ensures that the same voltage is used for both the module and the MCU.

Figure 3-1 also shows the basic UART connections to the host MCU.

Figure 3-2 shows the recommended connections for running the RN4870/71 on coin cell battery.

FIGURE 3-1: POWER SCHEME

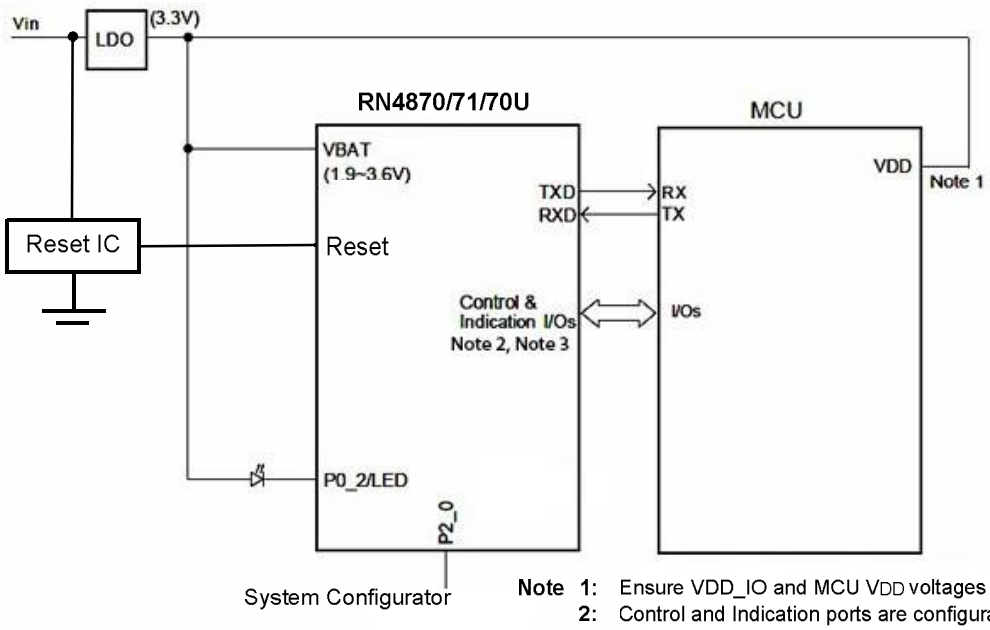

Note 1: Ensure VDD_IO and MCU VDD voltages are compatible
2: Control and Indication ports are configurable
3: To implement low-power operation, enable the UART_RX_IND pin and connect to ground.

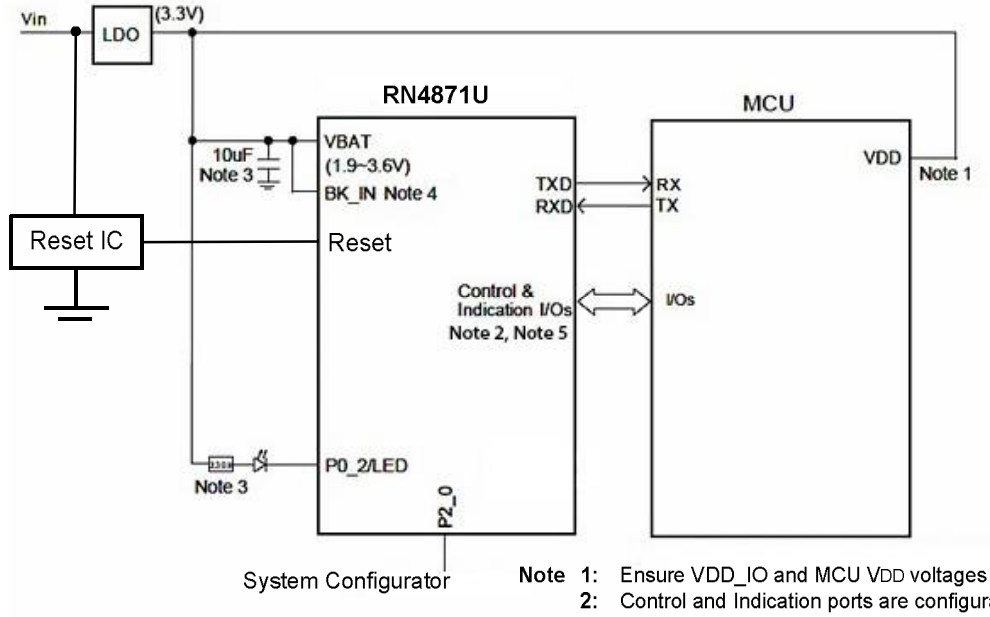

Note 1: Ensure VDD_IO and MCU VDD voltages are compatible
2: Control and Indication ports are configurable
3: 10 µF (X5R) and 330 ohm resistor are required for RN487x
4: BK_IN connects to VBAT for RN4871U
5: To implement low-power operation, enable the UART_RX_IND pin and connect to ground.

FIGURE 3-2: RN4870/71 COIN CELL POWER SCHEME

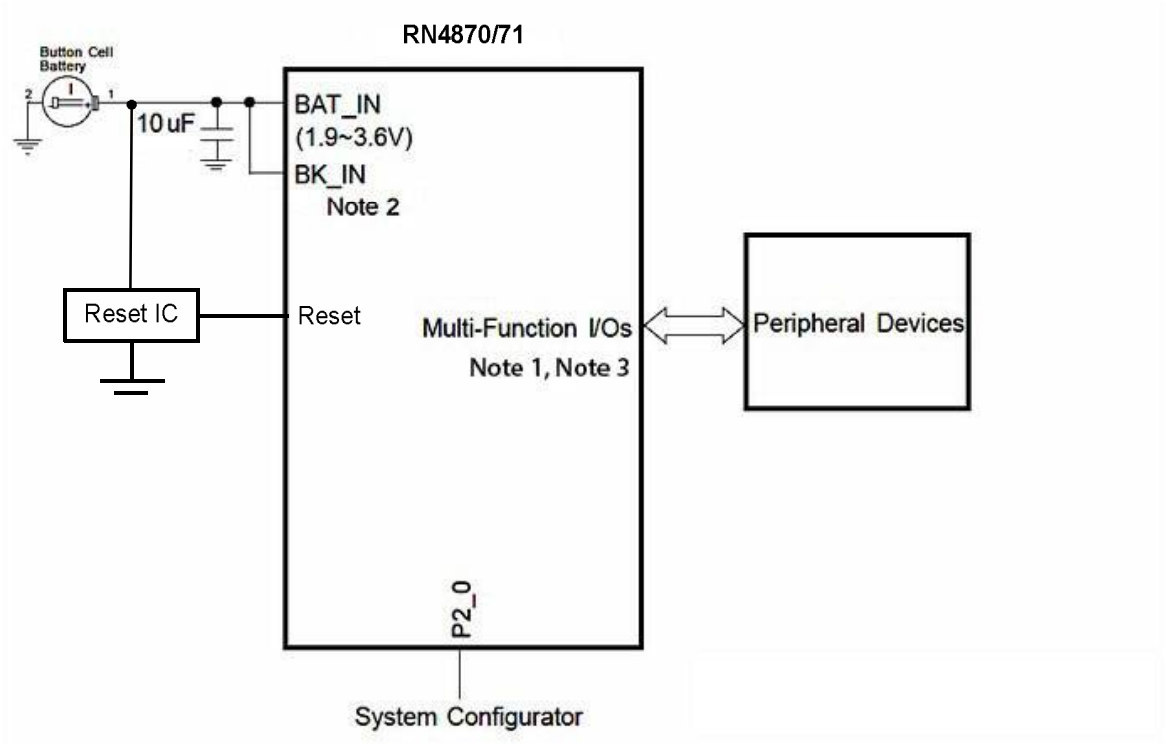

Note 1: Application includes ADC, PWM (RN4870), and I^2C bus interface

2: BK_IN connection is needed only for RN4871U.

3: To implement low-power operation, enable the UART_RX_IND pin and connect to ground.

The Configuration pins on the RN4870 can also be configured through Windows®-based User Interface (UI) Configuration tool, BLEDK3.

© 2016-2019 Microchip Technology Inc.

4.0 PHYSICAL DIMENSIONS AND ATTRIBUTES

4.1 RN4870 Module

Figure 4-1 shows the physical dimensions of the RN4870 module. Figure 4-2 illustrates the recommended PCB layout, and Figure 4-3 shows the recommended mounting details.

Ensure that there is *no* top copper layer near the test pin area, indicated by the shaded *keep out areas*, as shown in Figure 4-2. When laying out the host PCB, the areas under the antenna must *not* contain any top, inner layer, or bottom copper as shown in Figure 4-3. A low-impedance ground plane ensures the best radio performance (best range, lowest noise). Figure 4-3 also shows a minimum ground plane area to the left and right side of the module for best antenna performance. The ground plane can be extended beyond the minimum recommended as required for host PCB EMC noise reduction. For best range performance, keep all external metal at least 30 mm away from the ceramic chip antenna.

FIGURE 4-1: RN4870 MODULE DIMENSIONS

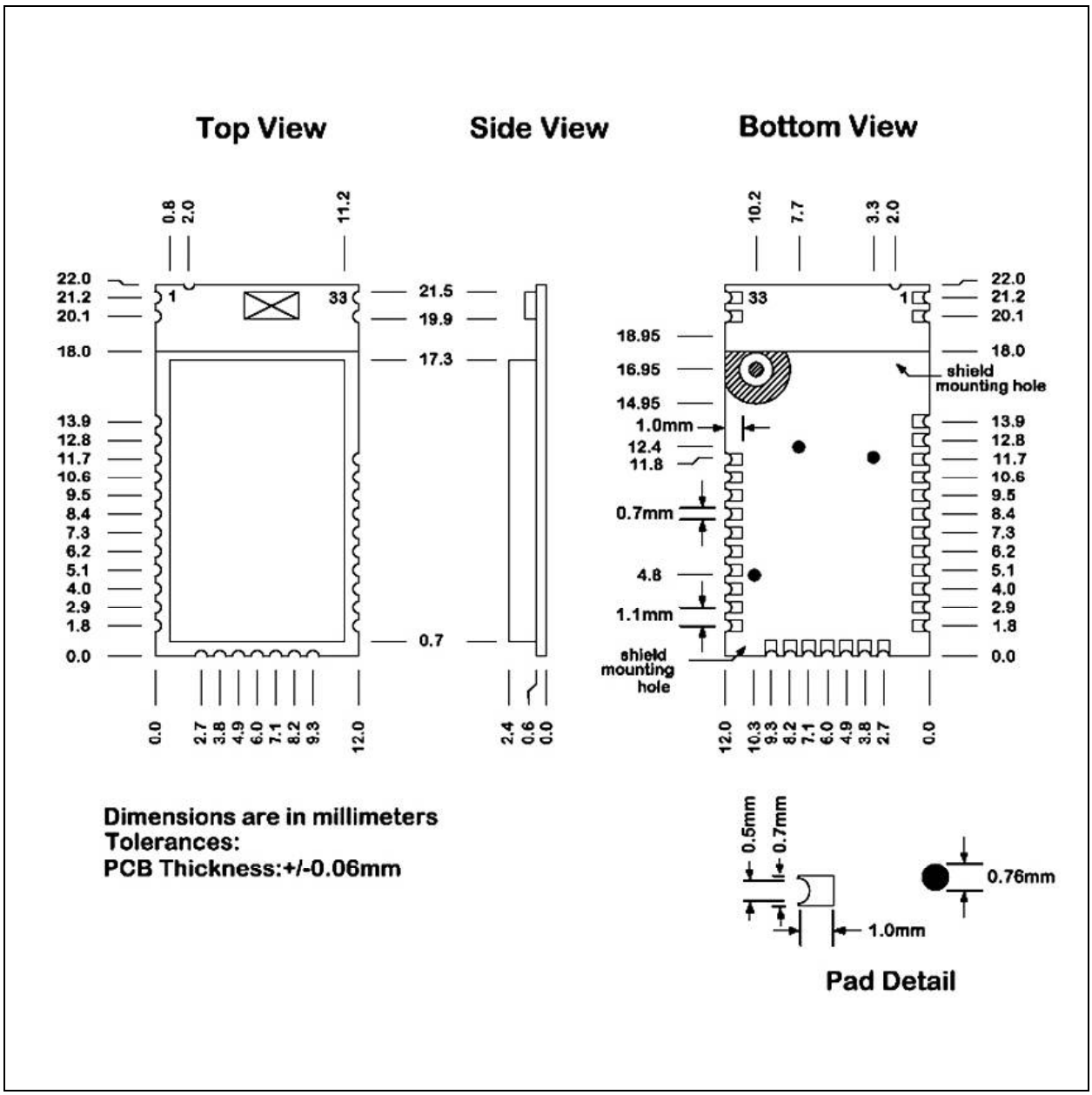

FIGURE 4-2: RN4870 RECOMMENDED PCB FOOTPRINT

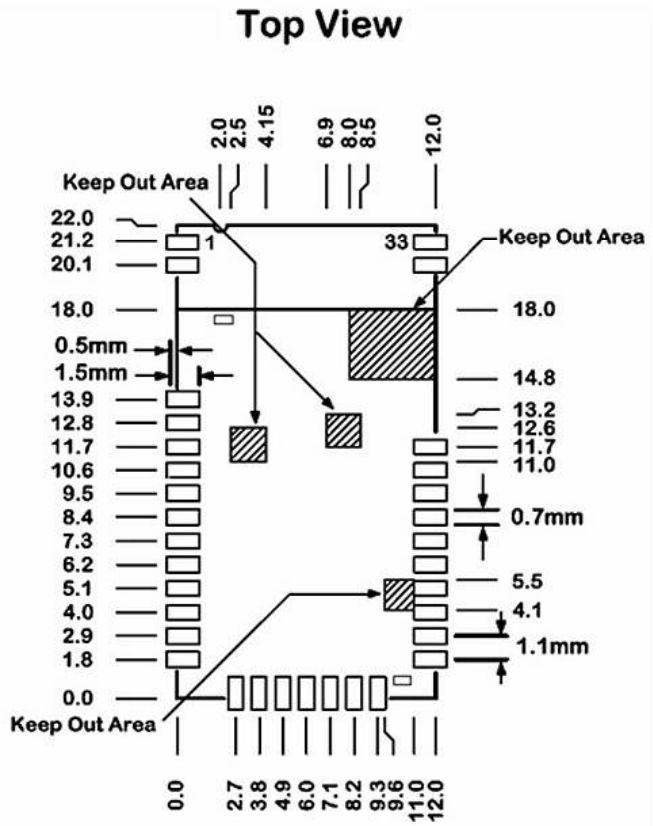

FIGURE 4-3: RECOMMENDED MOUNTING DETAILS

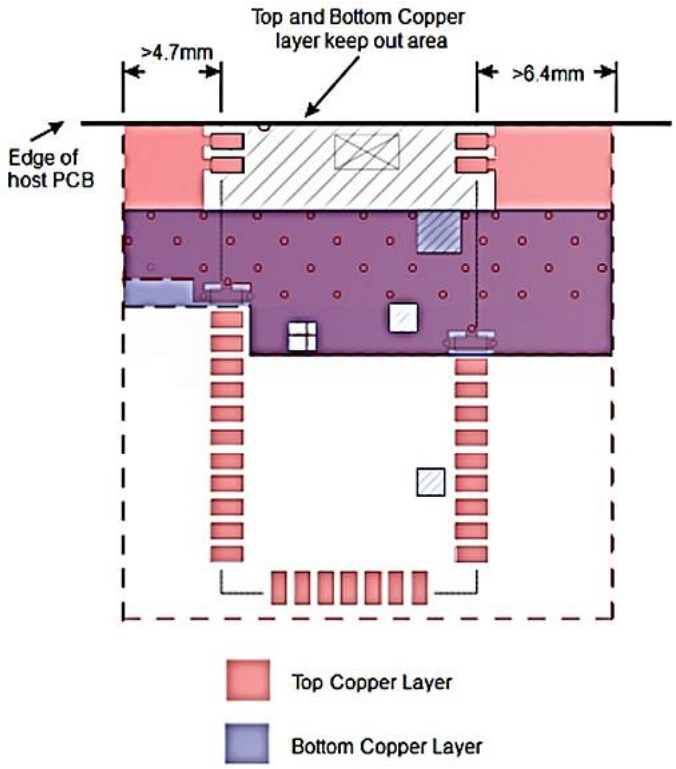

© 2016-2019 Microchip Technology Inc.

4.2 RN4870U Module

Figure 4-4 shows the physical dimensions of the RN4870U module. Figure 4-5 illustrates the recommended PCB layout, and Figure 4-6 shows the recommended mounting details.

A low-impedance ground plane ensures the best radio performance (best range, lowest noise). Pin 30 (BT_RF) is a 50 ohm connection that can be connected to an external antenna such as a PCB trace antenna, a component (chip) antenna, or through a host PCB 50 ohm microstrip trace. This trace can be extended to include passive parts for antenna attenuation padding, impedance matching, or to provide test posts. It is recommended that the microstrip trace be as short as possible for minimum loss and best impedance matching. If the microstrip trace is longer, a 50 ohm impedance is recommended.

FIGURE 4-4: RN4870U MODULE DIMENSIONS

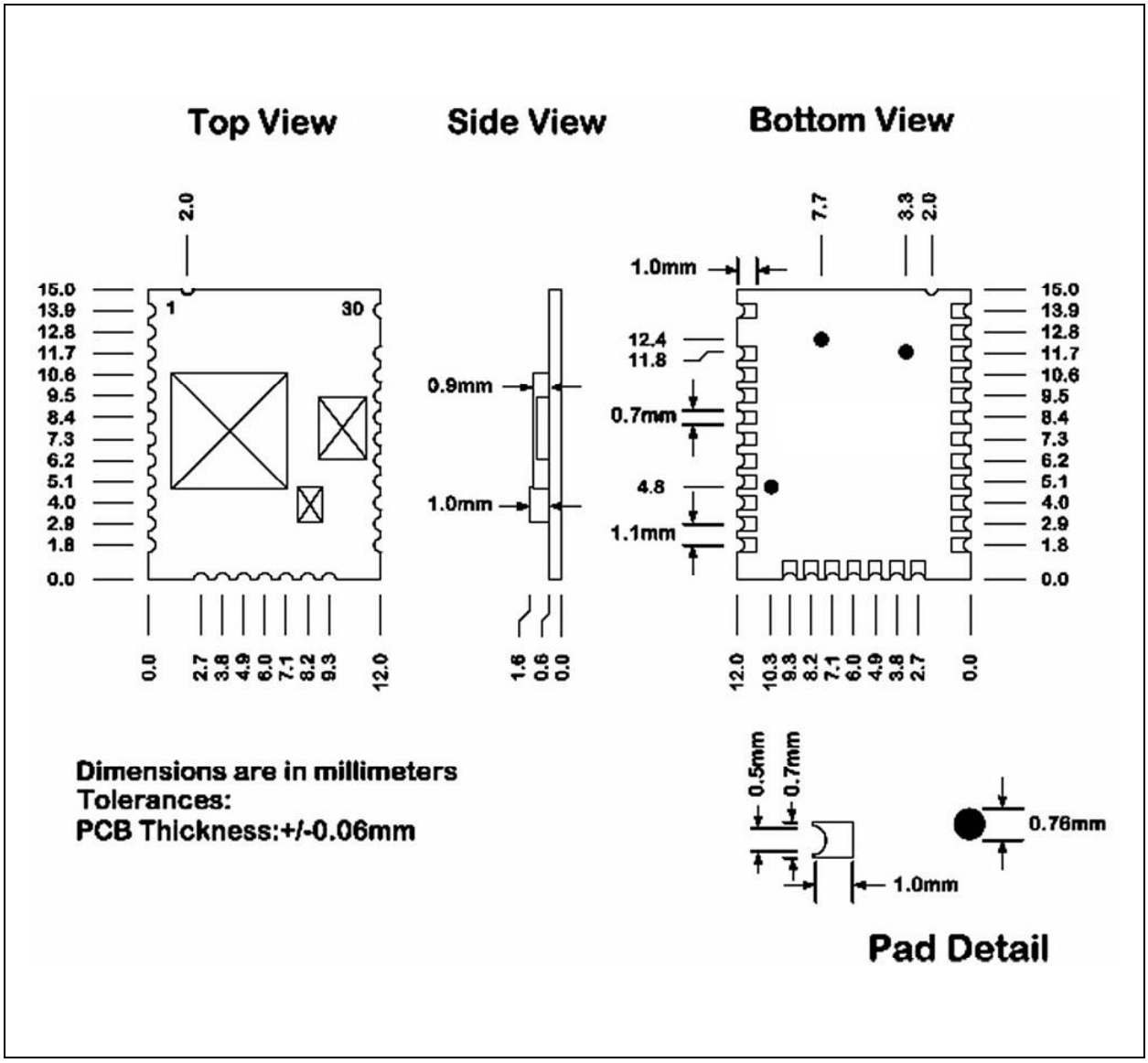

FIGURE 4-5: RN4870U RECOMMENDED PCB FOOTPRINT

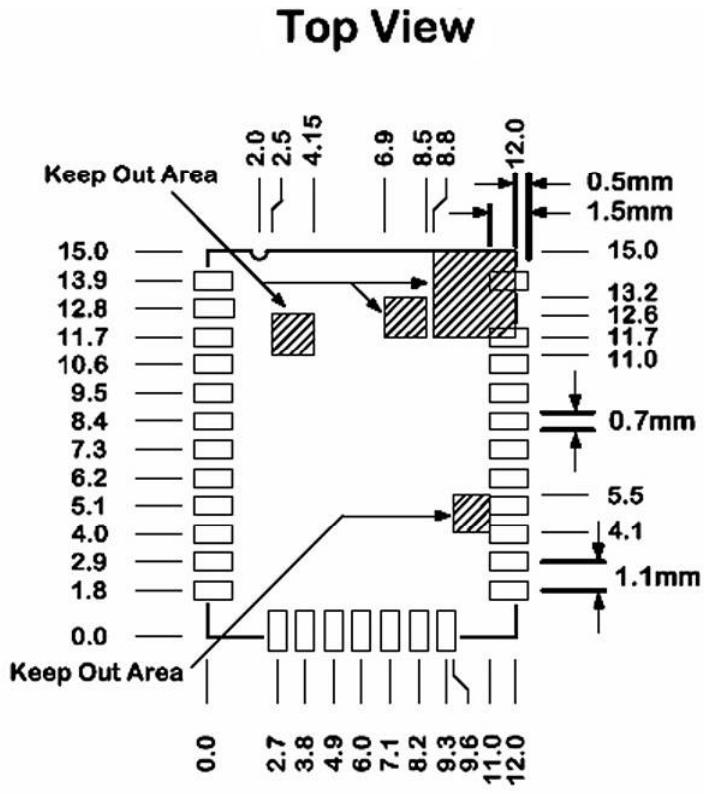

FIGURE 4-6: RN4870U RECOMMENDED PCB MOUNTING

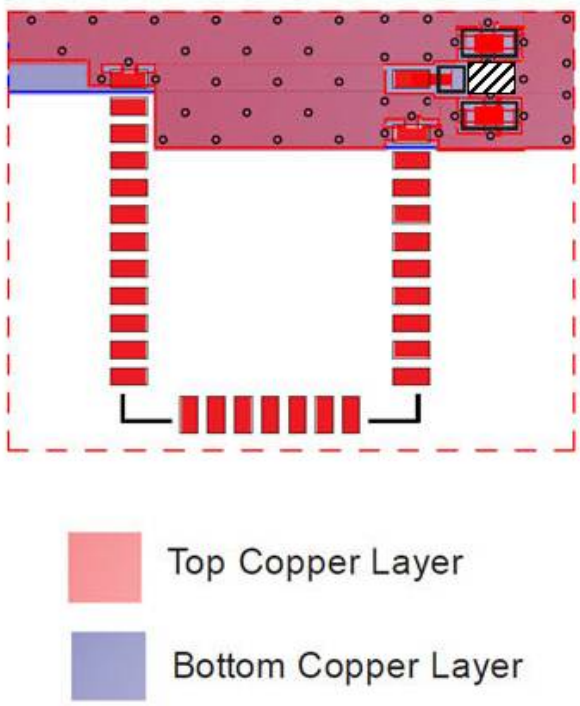

© 2016-2019 Microchip Technology Inc.

4.3 RN4871 Module

Figure 4-7 shows the physical dimensions of the RN4871 module. Figure 4-8 illustrates the recommended PCB layout, and Figure 4-9 shows the recommended mounting details.

Ensure that there is *no* top copper layer near the test pin area, indicated by the shaded *keep out areas*, as shown in Figure 4-8. When laying out the host PCB, the areas under the antenna must *not* contain any top, inner layer, or bottom copper as shown in Figure 4-9. A low-impedance ground plane ensures the best radio performance (best range, lowest noise). Figure 4-9 also shows a space area around the antenna section for best antenna performance. The ground plane can be extended beyond the minimum recommended as required for host PCB EMC noise reduction. For best range performance, keep all external metal at least 30 mm away from the ceramic chip antenna.

FIGURE 4-7: RN4871 MODULE DIMENSIONS

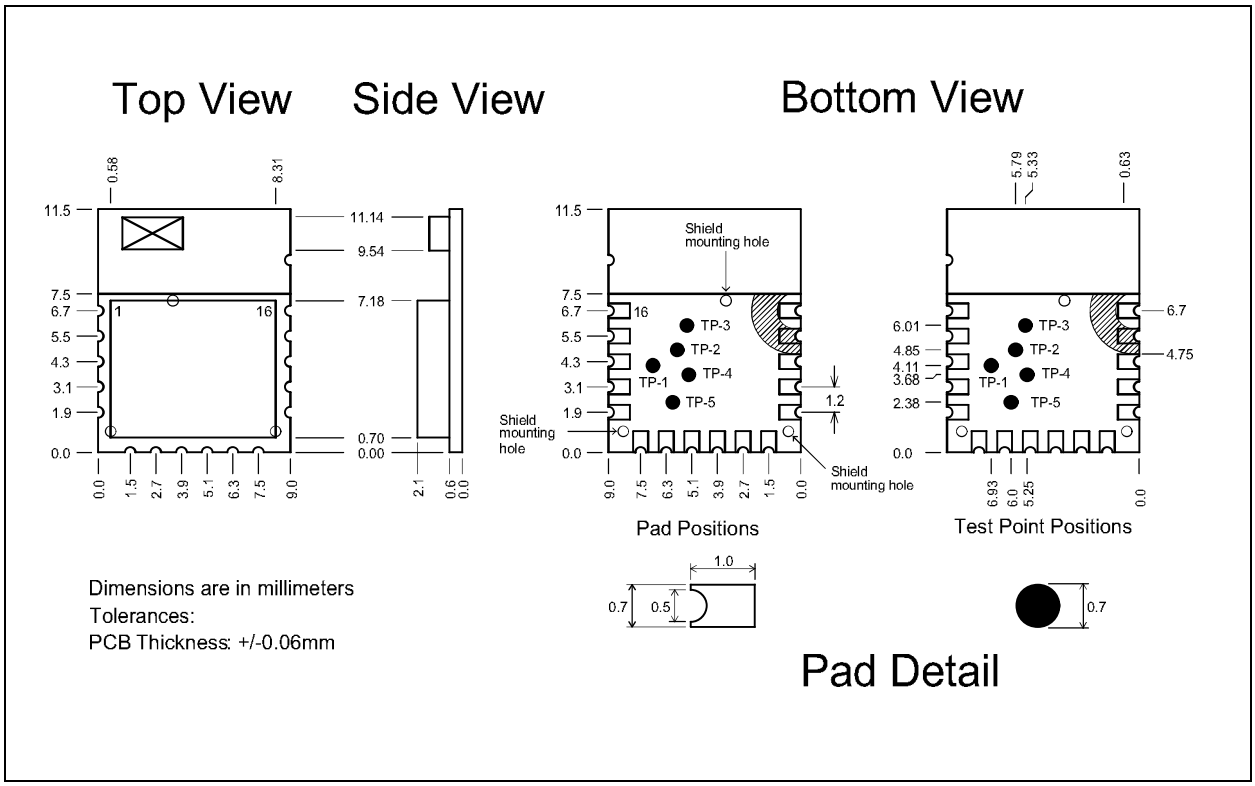

FIGURE 4-8: RN4871 RECOMMENDED PCB FOOTPRINT

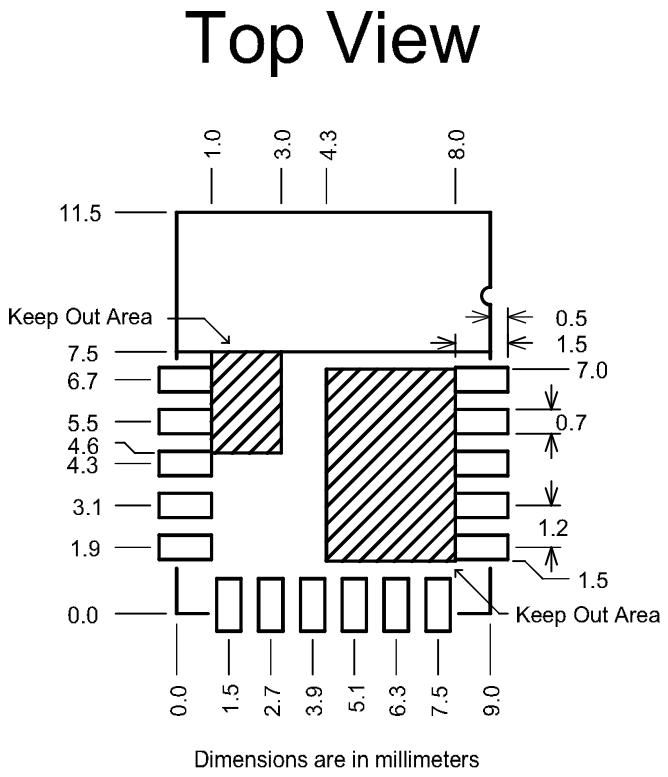

FIGURE 4-9: RN4871 RECOMMENDED PCB MOUNTING SUGGESTION

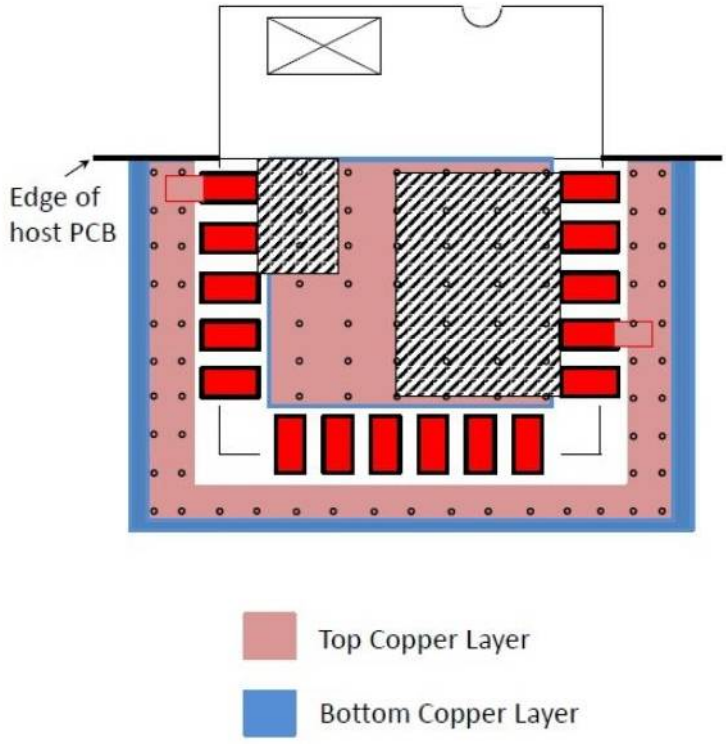

© 2016-2019 Microchip Technology Inc.

4.4 RN4871U Module

Figure 4-10 shows the physical dimensions of the RN4871U module. Figure 4-11 illustrates the recommended PCB layout. It is highly recommended to lay out the host PCB as suggested in Figure 4-12. Figure 4-13 shows the recommended placement for the module on the host PCB board. For optimal transmission and reception sensitivity, place the module at the edge of the board.

A low-impedance ground plane ensures the best radio performance (best range, lowest noise). Pin 1 (BT_RF) is a 50 ohm connection that can be connected to an external antenna such as a PCB trace antenna, a component (chip) antenna, or through a host PCB 50 ohm microstrip trace. This trace can be extended to include passive parts for antenna attenuation padding, impedance matching, or to provide test posts. It is recommended that the microstrip trace to be as short as possible for minimum loss and best impedance matching. If the microstrip trace is longer, a 50 ohm impedance is recommended.

FIGURE 4-10: RN4871U MODULE DIMENSIONS

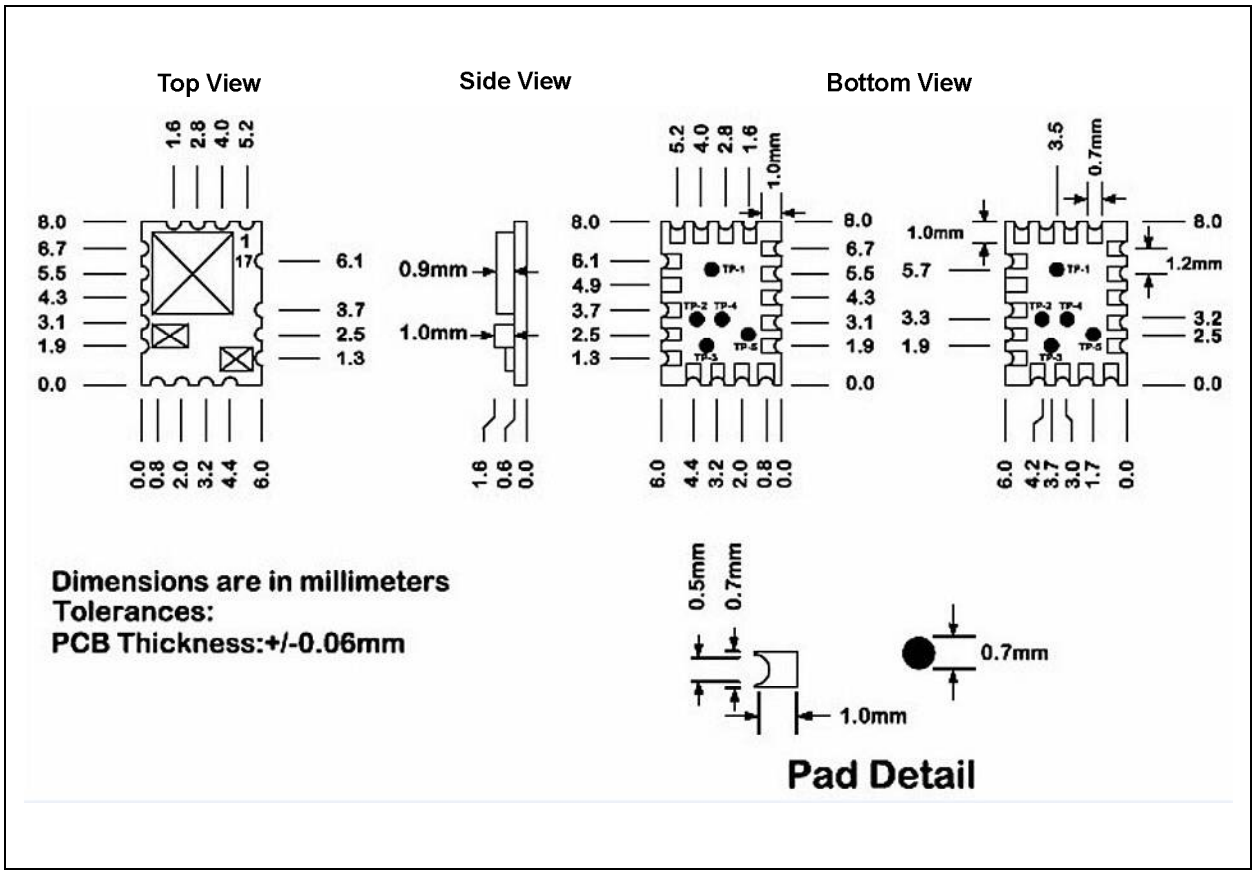

FIGURE 4-11: RN4871U RECOMMENDED PCB FOOTPRINT

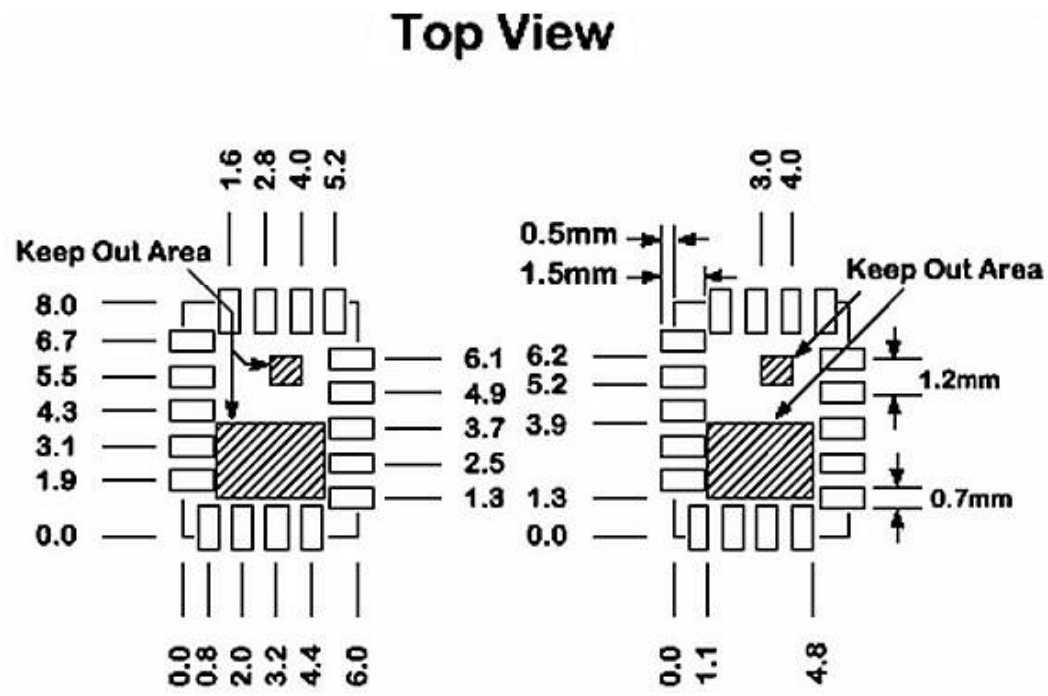

FIGURE 4-12: RN4871U RECOMMENDED PCB MOUNTING

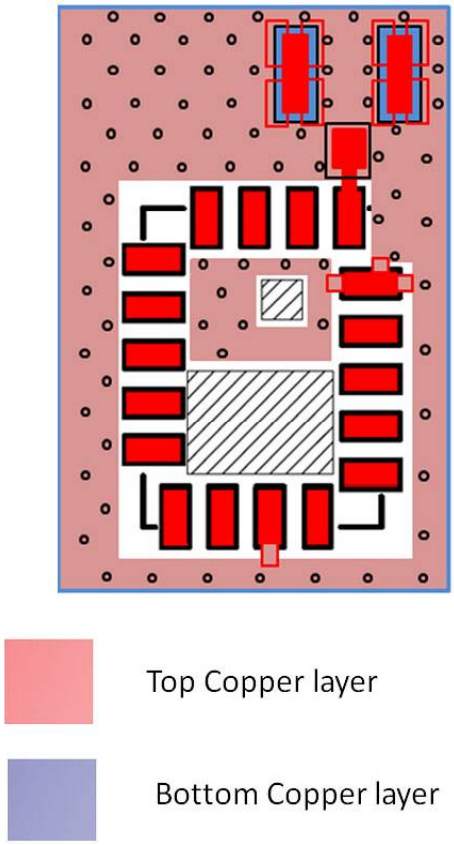

© 2016-2019 Microchip Technology Inc.

FIGURE 4-13: RECOMMENDATIONS FOR THE PLACEMENT OF THE MODULE ON THE HOST PCB BOARD

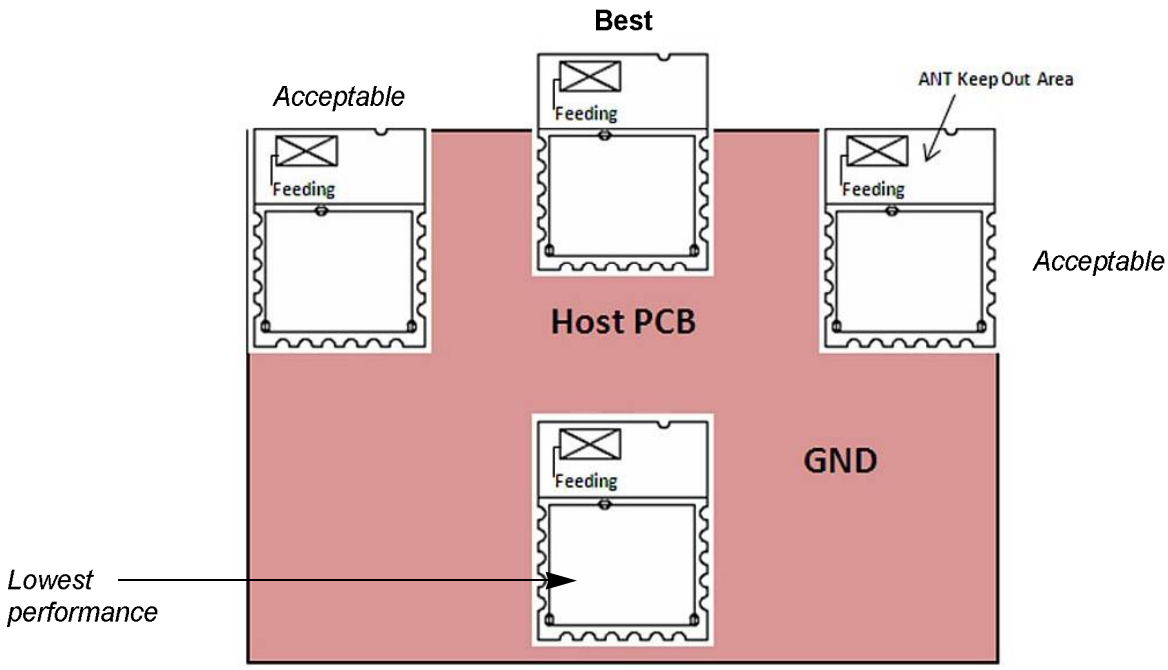

4.5 Soldering Recommendations

The RN4870/71 Bluetooth module is assembled using standard lead-free reflow profile IPC/JEDEC J-STD-020.

The module can be soldered to the host PCB using standard leaded and lead-free solder reflow profiles.

To avoid damaging the module, the following recommendations are given:

- Microchip Technology Application Note, *"AN233 Solder Reflow Recommendation"* (DS00233) provides solder reflow recommendations
- Do *not* exceed peak temperature (T_P) of 250°C
- Refer to the solder paste data sheet for specific reflow profile recommendations
- Use no-clean flux solder paste
- Do *not* wash as moisture can be trapped under the shield
- Use only one flow. If the PCB requires multiple flows, apply the module on the final flow.

NOTES:

© 2016-2019 Microchip Technology Inc.

5.0 APPLICATION REFERENCE CIRCUITS

5.1 External Configuration and Programming

The RN4870/71 module can be configured and firmware programmed using an external configuration and programming tool. Figure 5-1 shows the mandatory connections required between the module and the external programming header. It is recommended to include these pin connections on the host PCB for development. For accessing the various configuration and indication pins, use Table 1-2, Table 1-3, Table 1-4 and Table 1-5.

5.2 Reference Circuit

Figure 5-2 through Figure 5-5 show the reference circuits for various modules under the RN4870/71 family. In the circuits, the power input range is 1.9V ~ 3.6V. A battery reverse protection circuit is recommended in case a battery power input is used. Note that the VDD_IO is the same as the power input. In case of a LED connection, the power input must be greater than 3.0V. For the RN4870U, an RF antenna matching circuit must also be included as shown in Figure 5-3.

FIGURE 5-1: EXTERNAL PROGRAMMING HEADER CONFIGURATIONS

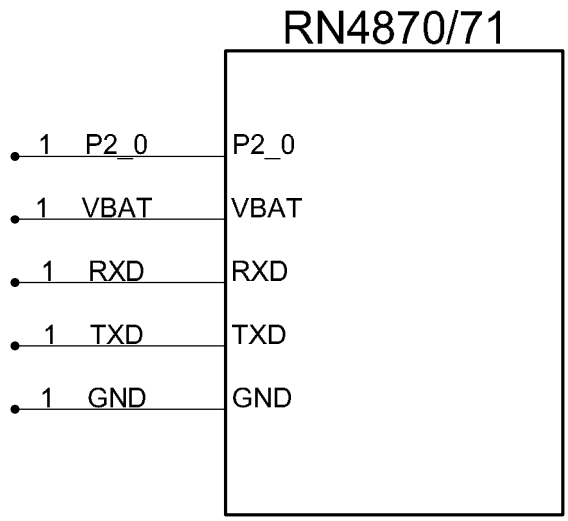

FIGURE 5-2: RN4870 REFERENCE CIRCUIT

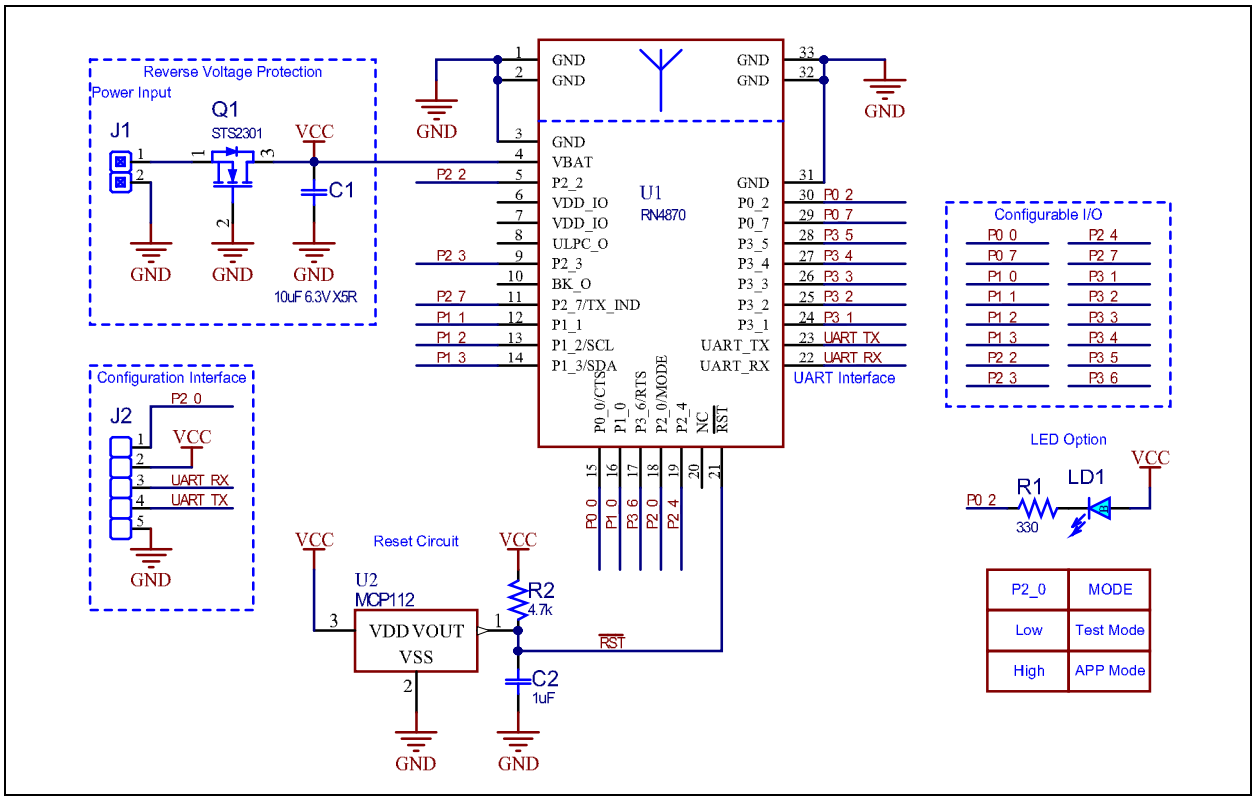

FIGURE 5-3: RN4870U REFERENCE CIRCUIT

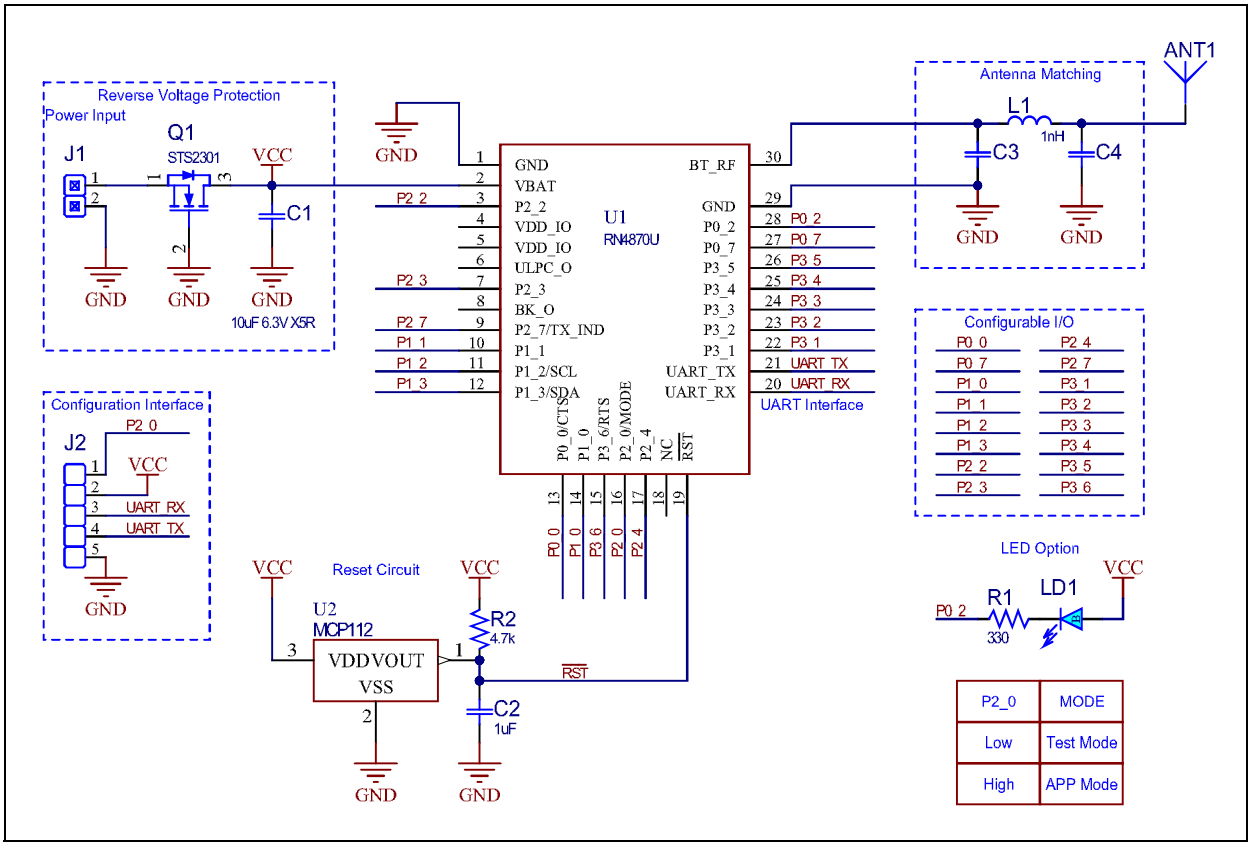

© 2016-2019 Microchip Technology Inc.

FIGURE 5-4: RN4871 REFERENCE CIRCUIT

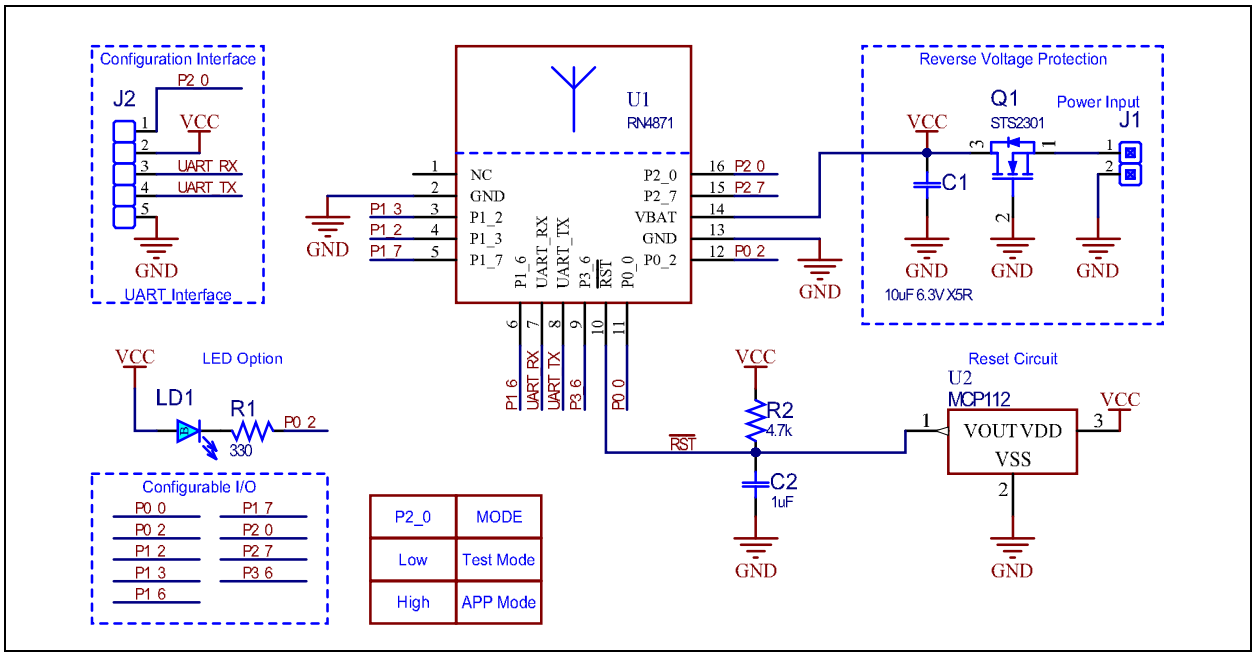

FIGURE 5-5: RN4871U REFERENCE CIRCUIT

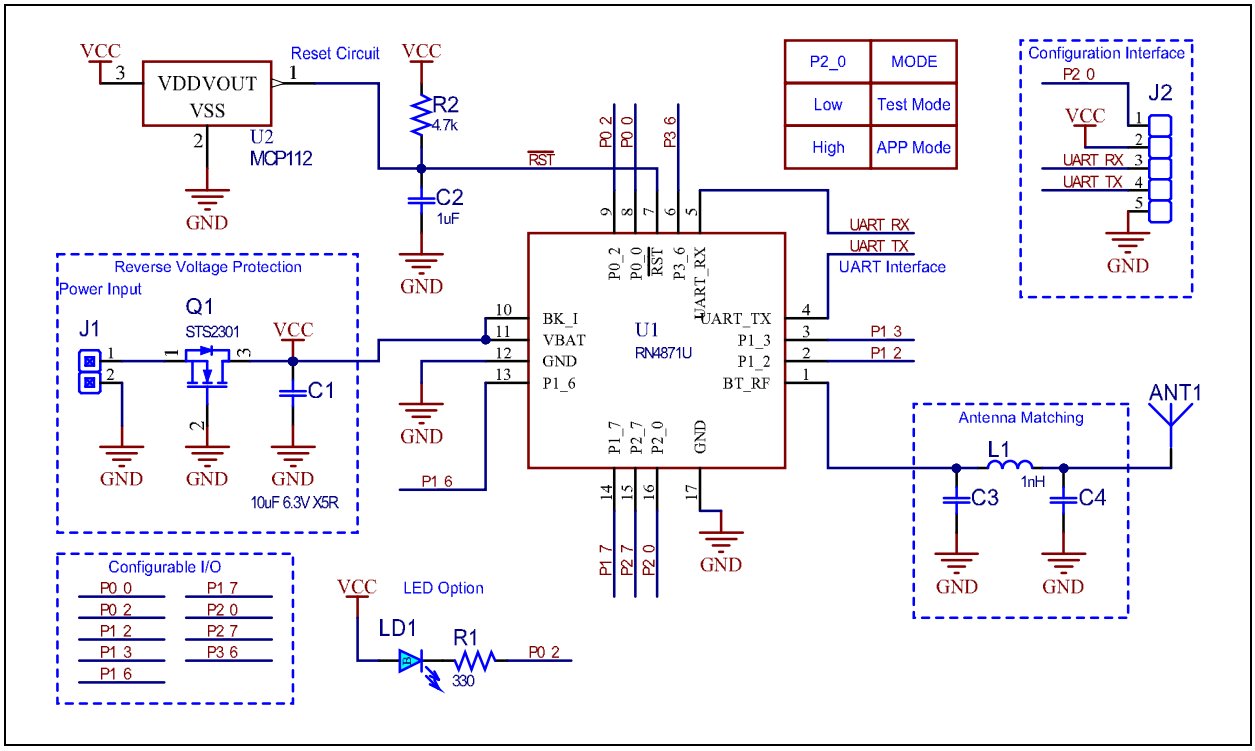

5.3 Power Drop Protection

To prevent any problems that may arise when the power supply goes below 1.9V, a power-supply drop-protection circuit is recommended. Essentially, this circuit consists of a Reset IC which acts as an *Open Drain* with a Delay =< 10 ms, and is triggered at 1.8V power supply. Figure 5-6 shows a recommended power drop protection circuit.

FIGURE 5-6: POWER DROP PROTECTION CIRCUIT

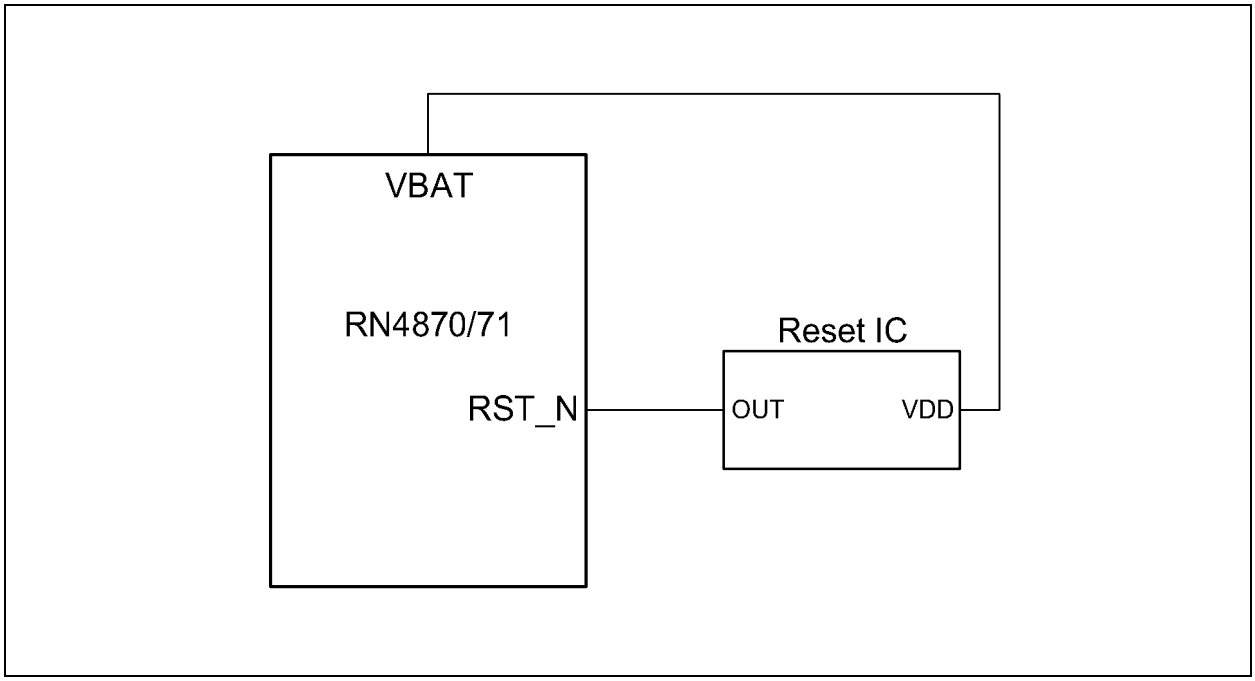

© 2016-2019 Microchip Technology Inc.

6.0 ASCII COMMAND API

The RN4870/71 command Application Programming Interfaces (APIs) are documented in the *"RN4870/71 Bluetooth® Low Energy Module User's Guide"* (DS50002466).

The following are the available command options and their categories:

- Connection
  - Establish connection
  - Disconnect
  - Bond/Unbond current connection
  - Start/Stop scan for other devices
  - Add/Delete peer devices to white list
  - Read RSSI values
  - Stop connection process
- I/O
  - Read/Write I^2C
  - Change settings in the EEPROM
  - Configure pin functions
  - Configure GPIO mask
  - Set/Get GPIO states
  - Read and write analog data
  - PWM control (only for RN4870)
- System
  - Reboot
  - Factory default
  - Enter and Exit Command mode
  - Enter Low-Power mode
- Scripting
  - Enter Script mode
  - Declare event handler
  - Execute current script
  - List current script
  - Clear script
  - Define user function
- GATT Services
  - Create/Delete public services/characteristics
  - Read/Write characteristic values
  - Set notification for characteristics
- GAP Role
  - Central, Peripheral, Observer and Broadcaster
- Advertising
  - Start/Stop
  - Set custom advertisement content
  - Set scan response content
  - Set beacon content
- Private Service
  - Create/Delete private services/characteristics
  - Read/Write characteristic values
  - Set notification for characteristics
- Transparent UART
  - Enable/Disable
  - Peripheral side configuration
  - Central side configuration
- Remote configuration of the module
- Read individual device information or profile settings

© 2016-2019 Microchip Technology Inc.

7.0 SUPPORTED SERVICES

The RN4870 supports two built-in GATT services:

- Device information public service
- UART transparent private service, which handles data streaming function

In addition to the above predefined private services, the RN4870 provides the ability to create private services. If the services are supported on both end points of a Bluetooth Low Energy connection, such as Central and Peripheral devices, data can be exchanged. For example, two RN4870 modules can define a custom (private) service with their own unique characteristics. Data can be exchanged easily via Command API. Private services are *not* registered with the Bluetooth SIG, and therefore *not* inter-operable with other Bluetooth Low Energy devices, unless the device implements the private service. An example of a built-in private service is the Transparent UART. For an example on how to create a custom service using the RN4870, refer to *"RN4870/71 Bluetooth® Low Energy Module User's Guide"* (DS50002466).

RN4870 allows custom-defined services up to five public and four private services. Each custom-defined service allows up to eight custom-defined characteristics. All service definitions are saved in on-board Non-Volatile Memory (NVM) where the user must setup the module only once.

8.0 ANTENNA CHARACTERISTICS

The RN4870 and RN4871 modules contain an integral ceramic chip antenna. Figure 8-1 and Figure 8-2 show the antenna performance on the modules.

FIGURE 8-1: RN4870 ANTENNA PERFORMANCE

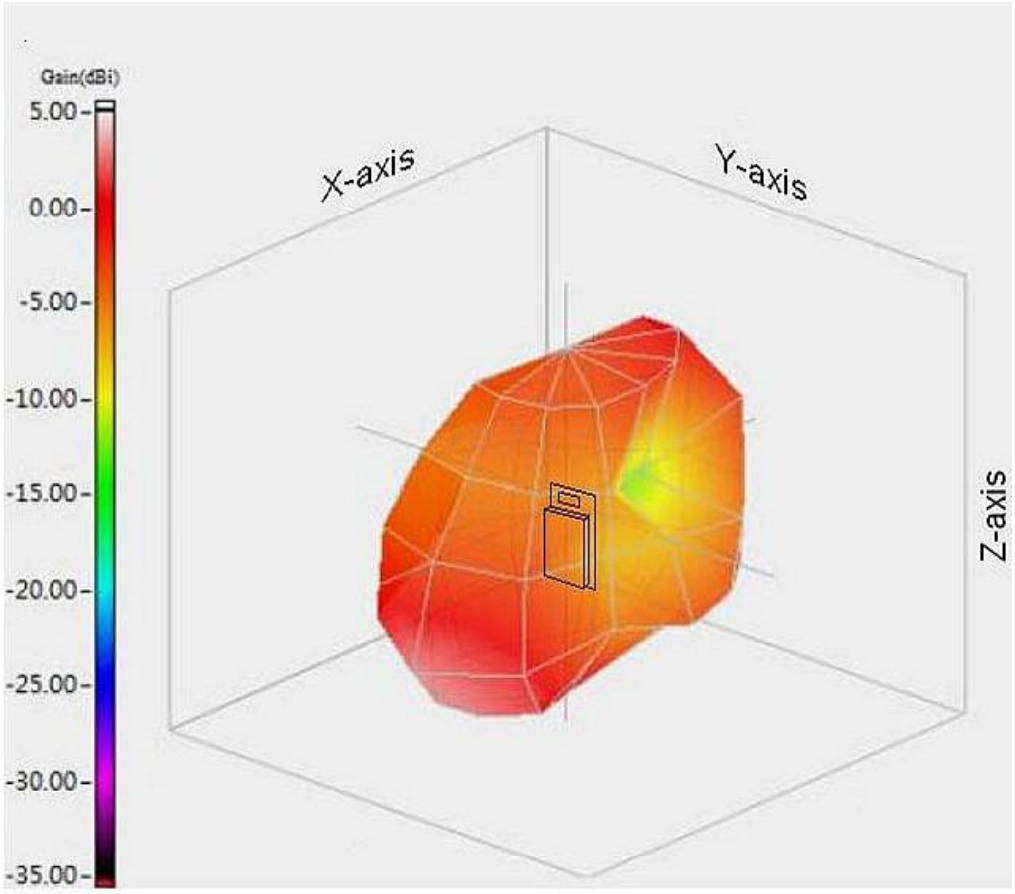

Parameter	Values
Frequency	2450 MHz
Max Gain	1.63 dBi
Efficiency	71.55%

Antenna Description	Manufacturer Part Number	Manufacturer
ANT ANT3216A063R2400A PIFA 2.4GHz L3 2W1.6	ANT3216A063R2400A	Yageo Corporation

FIGURE 8-2: RN4871 ANTENNA PERFORMANCE

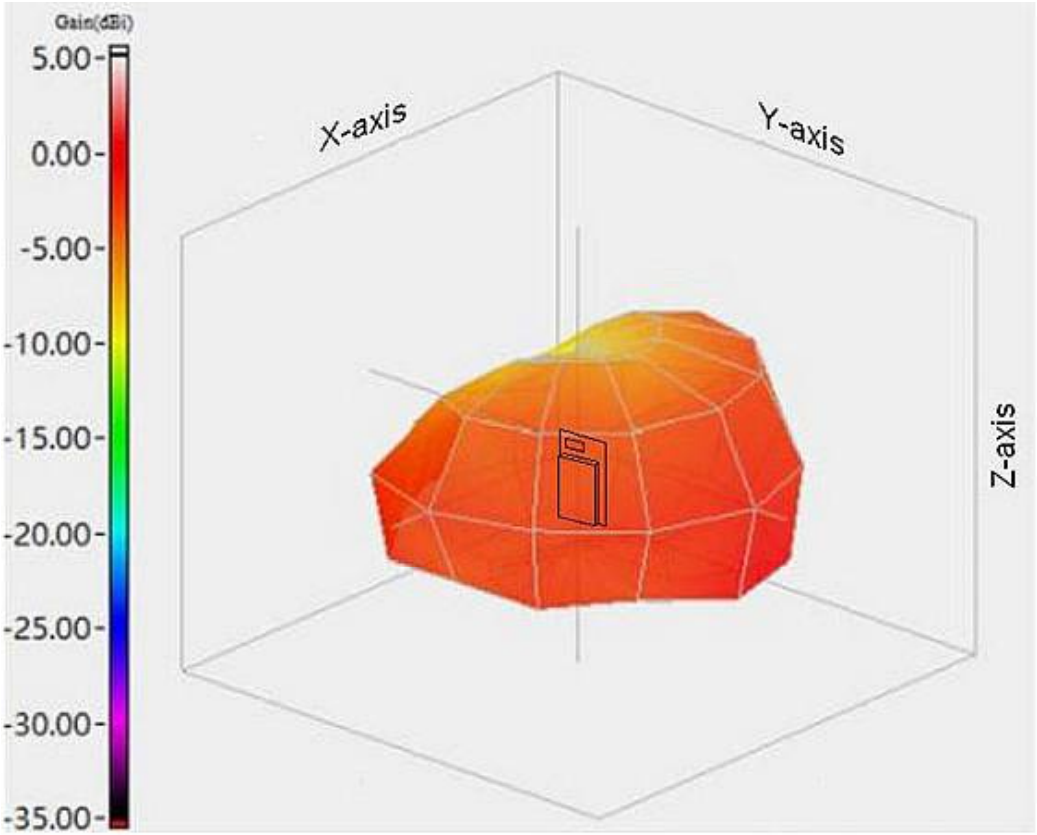

Parameter	Values
Frequency	2442 MHz
Max Gain	0.1 dBi
Efficiency	42.7%

Antenna Description	Manufacturer Part Number	Manufacturer
ANT AANT3216LL00R2400A PIFA 2.4GHz L3 2W1.6	ANT3216LL00R2400A	Yageo Corporation

© 2016-2019 Microchip Technology Inc.

9.0 TIMING CHARACTERISTICS

Figure 9-1 shows the timing diagram for the RN4870/71 module when it is reset in the Test mode and Application mode. Figure 9-2 shows the timing diagram for the module when it is powered on. In Application mode, when RN4870/71 is ready to talk to MCU after Reset, the module provides a UART response indicating that the Reset is complete. For more details, refer to the *"RN4870/71 Bluetooth® Low Energy Module User's Guide"* (DS50002466).

FIGURE 9-1: TIMING DIAGRAM OF RN4870/71 UART READY AFTER RESET (IN TEST AND APPLICATION MODE)

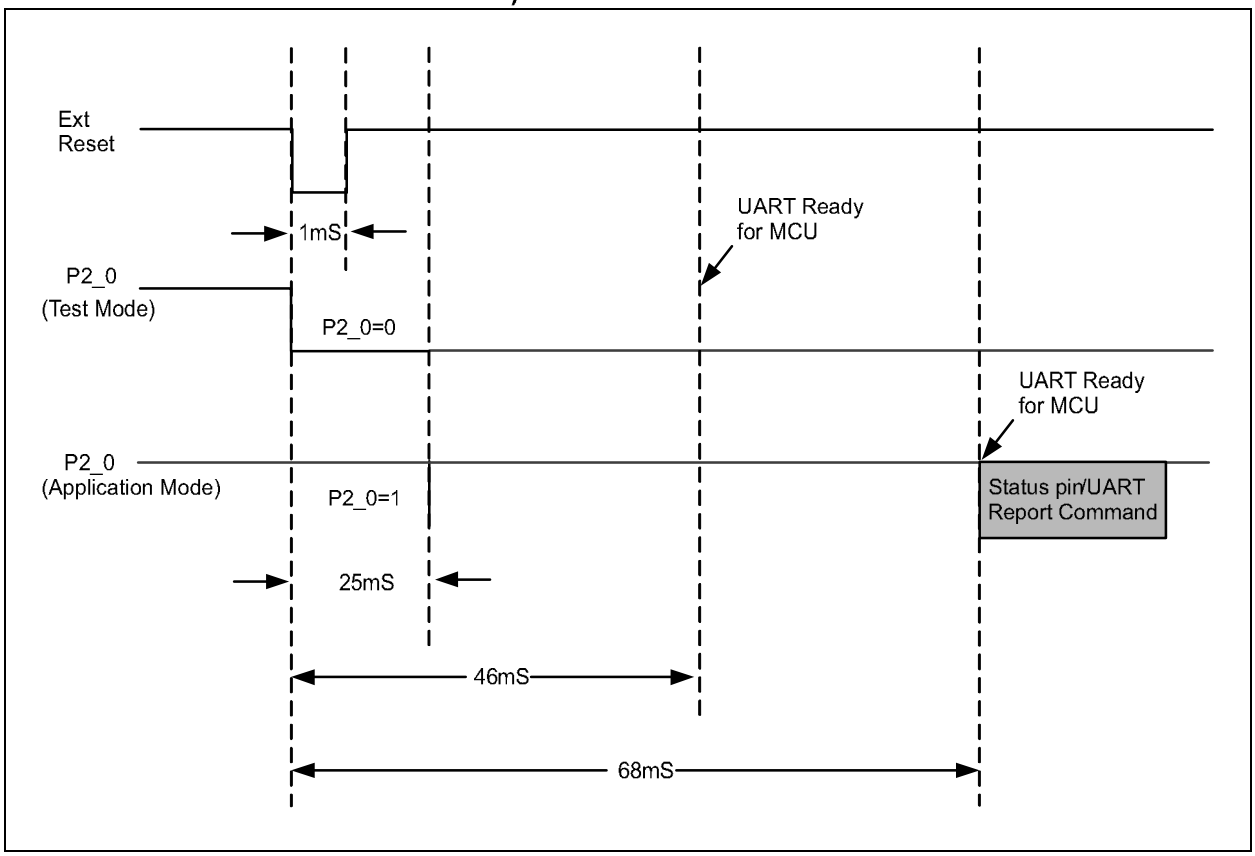

FIGURE 9-2: TIMING DIAGRAM OF RN4870/71 UART WHEN POWERED ON (IN TEST AND APPLICATION MODE)

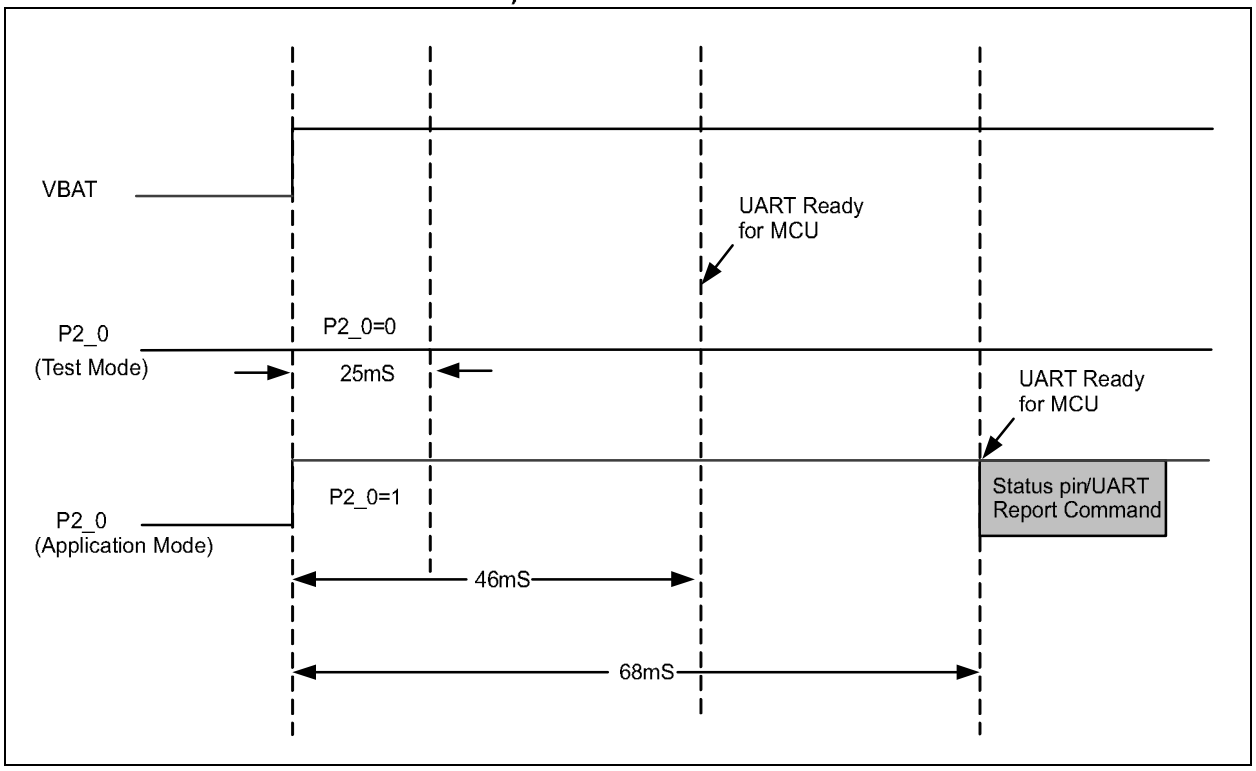

Table 9-1 shows the error rate for various UART baud rates for the RN4870/71 module. The system clock is running at 16 MHz.

TABLE 9-1: ERROR RATE FOR VARIOUS BAUD RATES ON THE RN4870/71

Set Baud Rate	Measured Baud Rate	Error
921600	941176	-2.12%
460800	457143	0.79%
307200	307692	-0.16%
230400	231884	-0.64%
115200	115942	-0.64%
57600	57971	-0.64%
38400	38095	0.79%
19200	19048	0.79%
9600	9524	0.79%

© 2016-2019 Microchip Technology Inc.

10.0 REGULATORY APPROVAL

The RN4870 module has received the regulatory approval for the following countries:

- United States/FCC ID: A8TBM70ABCDEFGH
- Canada/ISED
  - IC: 12246A-BM70BLES1F2
  - HVIN: BM70BLES1F2
- Europe/CE
- Japan/MIC: 202-SMD069
- Korea/KCC: MSIP-CRM-mcp-BM70BLES1FC2
- Taiwan/NCC No: CCAN15LP0501T3
- China/SRRC: CMIIT ID: 2016DJ5729

The RN4871 module has received the regulatory approval for the following countries:

- United States/FCC ID: A8TBM71S2
- Canada/ISED
  - IC: 12246A-BM71S2
  - HVIN: BM71BLES1FC2
- Europe/CE
- Japan/MIC: 005-101150
- Korea/KCC: MSIP-CRM-mcp-BM71BLES1FC2
- Taiwan/NCC No: CCAN16LP0011T7
- China/SRRC: CMIIT ID: 2016DJ5890

10.1 United States

The RN4870/71 module has received Federal Communications Commission (FCC) CFR47 Telecommunications, Part 15 Subpart C “Intentional Radiators” single-modular approval in accordance with Part 15.212 Modular Transmitter approval. Single-modular transmitter approval is defined as a complete RF transmission sub-assembly, designed to be incorporated into another device, that must demonstrate compliance with FCC rules and policies independent of any host. A transmitter with a modular grant can be installed in different end-use products (referred to as a host, host product, or host device) by the grantee or other equipment manufacturer, then the host product may not require additional testing or equipment authorization for the transmitter function provided by that specific module or limited module device.

A host product itself is required to comply with all other applicable FCC equipment authorization regulations, requirements, and equipment functions that are not associated with the transmitter module portion. For example, compliance must be demonstrated: to regulations for other transmitter components within a host product; to requirements for unintentional radiators (Part 15 Subpart B), such as digital devices, computer peripherals, radio receivers, etc.; and to additional authorization requirements for the non-transmitter functions on the transmitter module (i.e., Verification or Declaration of Conformity) as appropriate (e.g., Bluetooth and Wi-Fi® transmitter modules may also contain digital logic functions).

10.1.1 LABELING AND USER INFORMATION REQUIREMENTS

The RN4870 module has been labeled with its own FCC ID number, and if the FCC ID is not visible when the module is installed inside another device, then the outside of the finished product into which the module is installed must also display a label referring to the enclosed module. This exterior label can use wording as follows:

For the RN4870 module:

> Contains Transmitter Module
> FCC ID: A8TBM70ABCDEFGH
> *or*
> Contains FCC ID: A8TBM70ABCDEFGH
>
> This device complies with Part 15 of the FCC Rules. Operation is subject to the following two conditions: (1) this device may not cause harmful interference, and (2) this device must accept any interference received, including interference that may cause undesired operation.

Due to the limited size of the RN4871, the FCC Identifier (FCC ID) is not displayed on the module. Therefore, the FCC ID must be placed on the outside of the finished product into which the module is installed must also display a label referring to the enclosed module. This exterior label can use wording as follows:

For the RN4871 module:

> Contains Transmitter Module
> FCC ID: A8TBM71S2
> *or*
> Contains FCC ID: A8TBM71S2
>
> This device complies with Part 15 of the FCC Rules. Operation is subject to the following two conditions: (1) this device may not cause harmful interference, and (2) this device must accept any interference received, including interference that may cause undesired operation.

A user's manual for the product should include the following statement:

> This equipment has been tested and found to comply with the limits for a Class B digital device, pursuant to part 15 of the FCC Rules. These limits are designed to provide reasonable protection against harmful interference in a residential installation. This equipment generates, uses and can radiate radio frequency energy, and if not installed and used in accordance with the instructions, may cause harmful interference to radio communications. However, there is no guarantee that interference will not occur in a particular installation. If this equipment does cause harmful interference to radio or television reception, which can be determined by turning the equipment off and on, the user is encouraged to try to correct the interference by one or more of the following measures:
> - Reorient or relocate the receiving antenna.
> - Increase the separation between the equipment and receiver.
> - Connect the equipment into an outlet on a circuit different from that to which the receiver is connected.
> - Consult the dealer or an experienced radio/TV technician for help.

Additional information on labeling and user information requirements for Part 15 devices can be found in KDB Publication 784748 available at the FCC Office of Engineering and Technology (OET) Laboratory Division Knowledge Database (KDB) http://apps.fcc.gov/oetcf/kdb/index.cfm.

10.1.2 RF EXPOSURE

All transmitters regulated by FCC must comply with RF exposure requirements. KDB Publication 447498 General RF Exposure Guidance provides guidance in determining whether proposed or existing transmitting facilities, operations or devices comply with limits for human exposure to Radio Frequency (RF) fields adopted by the Federal Communications Commission (FCC).

Output power listed is conducted. This grant is valid only when the module is sold to OEM integrators and must be installed by the OEM or OEM integrators. This transmitter is restricted for use with the specific antenna(s) tested in this application for Certification and must not be co-located or operating in conjunction with any other antenna or transmitters within a host device, except in accordance with FCC multi-transmitter product procedures. This module is approved for installation into mobile or/and portable host platforms.

10.1.3 HELPFUL WEB SITES

Federal Communications Commission (FCC): http://www.fcc.gov

FCC Office of Engineering and Technology (OET) Laboratory Division Knowledge Database (KDB): http://apps.fcc.gov/oetcf/kdb/index.cfm

10.2 Canada

The RN4870/71 module has been certified for use in Canada under Innovation, Science and Economic Development Canada (ISED, formerly Industry Canada) Radio Standards Procedure (RSP) RSP-100, Radio Standards Specification (RSS) RSS-247 and RSS-Gen. Modular approval permits the installation of a module in a host device without the need to recertify the device.

10.2.1 LABELING AND USER INFORMATION REQUIREMENTS

Labeling Requirements for the Host product (from RSP-100-Issue 11, Section 3): The host product shall be properly labeled to identify the module within the host device.

On the RN4871, due to the limited module size, the IC identifier is displayed in the data sheet only and it cannot be displayed on the module label.

The Innovation, Science and Economic Development Canada certification label of a module shall be clearly visible at all times when installed in the host device; otherwise, the host device must be labeled to display the Innovation, Science and Economic Development Canada certification number of the module, preceded by the word "Contains", or similar wording expressing the same meaning, as follows:

For the RN4870 module:

Contains IC: 12246A-BM70BLES1F2

For the RN4871 module:

Contains IC: 12246A-BM71S2

© 2016-2019 Microchip Technology Inc.

User Manual Notice for License-Exempt Radio Apparatus (from Section 8.4, RSS-Gen, Issue 4, November 2014): User manuals for license-exempt radio apparatus shall contain the following or equivalent notice in a conspicuous location in the user manual or alternatively on the device or both:

This device complies with Industry Canada's license-exempt RSS standard(s). Operation is subject to the following two conditions:

(1) This device may not cause interference, and

(2) This device must accept any interference, including interference that may cause undesired operation of the device.

Le présent appareil est conforme aux CNR d'Industrie Canada applicables aux appareils radio exempts de licence. L'exploitation est autorisée aux deux conditions suivantes:

(1) l'appareil ne doit pas produire de brouillage, et

(2) l'utilisateur de l'appareil doit accepter tout brouillage radioélectrique subi, même si le brouillage est susceptible d'en compromettre le fonctionnement.

Guidelines on Transmitter Antenna for License Exempt Radio Apparatus:

Under Industry Canada regulations, this radio transmitter may only operate using an antenna of a type and maximum (or lesser) gain approved for the transmitter by Industry Canada. To reduce potential radio interference to other users, the antenna type and its gain must be so chosen that the equivalent isotropically radiated power (e.i.r.p.) is not more than that necessary for successful communication.

Conformément à la réglementation d'Industrie Canada, le présent émetteur radio peut fonctionner avec une antenne d'un type et d'un gain maximal (ou inférieur) approuvé pour l'émetteur par Industrie Canada. Dans le but de réduire les risques de brouillage radioélectrique à l'intention des autres utilisateurs, il faut choisir le type d'antenne et son gain de sorte que la puissance isotrope rayonnée équivalente (p.i.r.e.) ne dépasse pas l'intensité nécessaire à l'établissement d'une communication satisfaisante.

10.2.2 RF EXPOSURE

All transmitters regulated by the Innovation, Science and Economic Development Canada (ISED) must comply with RF exposure requirements listed in RSS-102 - Radio Frequency (RF) Exposure Compliance of Radio communication Apparatus (All Frequency Bands).

This transmitter is restricted for use with a specific antenna tested in this application for certification, and must not be co-located or operating in conjunction with any other antenna or transmitters within a host device, except in accordance with Innovation, Science and Economic Development Canada multi-transmitter guidelines.

The installation of the transmitter must ensure compliance is demonstrated according to the ISED SAR procedures.

10.2.3 HELPFUL WEB SITES

Innovation, Science and Economic Development Canada (ISED): http://www.ic.gc.ca/.

10.3 Europe

The RN4870/71 module is an Radio Equipment Directive (RED) assessed radio module that is CE marked and has been manufactured and tested with the intention of being integrated into a final product.

The RN4870/71 module has been tested to RED 2004/53/EC Essential Requirements for Health and Safety (Article (3.1(a)), Electromagnetic Compatibility (EMC) (Article 3.1(b)), and Radio (Article 3.2), which are summarized in the following European Compliance Testing tables.

The ETSI provides guidance on modular devices in the "*Guide to the application of harmonised standards covering Article 3.1(b) and Article 3.2 of the Directive 2014/53/EU RED to multi-radio and combined radio and non-radio equipment*" document available at http://www.etsi.org/deliver/etsi_eg/203300_203399/203367/01.01.01_60/eg_203367v010101p.pdf.

Note:	To maintain conformance to the testing listed in Table 10-1/Table 10-2, the module shall be installed in accordance with the installation instructions in this data sheet and shall not be modified. When integrating a radio module into a completed product, the integrator becomes the manufacturer of the final product and is therefore responsible for demonstrating compliance of the final product with the essential requirements against the RED.

10.3.1 LABELING AND USER INFORMATION REQUIREMENTS

The label on the final product which contains the RN4870/71 module must follow CE marking requirements.

TABLE 10-1: EUROPEAN COMPLIANCE TESTING (RN4870 MODULE)

Certification	Standards	Article	Laboratory	Report Number	Date
Safety	EN60950-1:2006/A11:2009/ A1:2010/A12:2011/A2:2013	[3.1(a)]	TUV Rheinland Taiwan	10051261 003	2016-01-05
Health	EN300328 V1.9.1/ EN62479:2010			10053580 001	2015-12-10
EMC	EN301489-1 V1.9.2	[3.1(b)]		10051137 002	2016-01-08
	EN301489-17 V2.2.1				
	EN301489-1 V2.1.1 EN301489-17 V2.2.0			10051137 003	2017-05-26
	EN301489-17 V3.1.1 EN301489-17 V3.2.0				
Radio	EN300328 V1.9.1	(3.2)		10053580 001	2015-12-10
				50067510 001(1)	2016-01-04
	EN300328 V2.1.1			50067510 002	2017-05-26

Note 1: RF reports apply only to modules using the part IS1870SF-202.

TABLE 10-2: EUROPEAN COMPLIANCE TESTING (RN4871 MODULE)

Certification	Standards	Article	Laboratory	Report Number	Date
Safety	EN60950-1:2006/A11:2009/ A1:2010/A12:2011/A2:2013	[3.1(a)]	TUV Rheinland Taiwan	10053210 001	2016-01-07
Health	EN300328 V1.9.1/ EN62479:2010			10053433 001	2015-12-29
EMC	EN301489-1 V1.9.2	[3.1(b)]		10052964 001	2015-10-22
	EN301489-17 V2.2.1				
	EN301489-1 V2.1.1 EN301489-1 V2.2.0			10052964 002	2017-05-26
	EN301489-17 V3.1.1 EN301489-17 V3.2.0				
Radio	EN300328 V1.9.1	(3.2)		10053433 001	2015-12-29
				50067509 001(1)	2017-04-10
	EN300328 V2.1.1			50067509 002	2017-05-26

Note 1: RF reports apply only to modules using the part IS1871SF-202.

10.3.2 CONFORMITY ASSESSMENT

From ETSI Guidance Note EG 203367, section 6.1 Non-radio products are combined with a radio product:

If the manufacturer of the combined equipment installs the radio product in a host non-radio product in equivalent assessment conditions (i.e. host equivalent to the one used for the assessment of the radio product) and according to the installation instructions for the radio product, then no additional assessment of the combined equipment against article 3.2 of the RED is required.

The European Compliance Testing listed in Table 10-1 and Table 10-2 are performed using the integral ceramic chip antenna.

10.3.2.1 SIMPLIFIED EU DECLARATION OF CONFORMITY

Hereby, Microchip Technology Inc. declares that the radio equipment type RN4870/71 is in compliance with Directive 2014/53/EU.

The full text of the EU declaration of conformity, for this product, is available at: http://www.microchip.com/design-centers/wireless-connectivity

© 2016-2019 Microchip Technology Inc.

10.3.3 HELPFUL WEB SITES

A document that can be used as a starting point in understanding the use of Short Range Devices (SRD) in Europe is the European Radio Communications Committee (ERC) Recommendation 70-03 E, which can be downloaded from the European Radio Communications Committee (ECC) at: http://www.ecodocdb.dk/.

Additional helpful web sites are:

- Radio Equipment Directive (2014/53/EU): https://ec.europa.eu/growth/single-market/european-standards/harmonised-standards/red_en
- European Conference of Postal and Telecommunications Administrations (CEPT): http://www.cept.org
- European Telecommunications Standards Institute (ETSI): http://www.etsi.org
- The Radio Equipment Directive Compliance Association (REDCA): http://www.redca.eu/

10.4 Japan

The RN4870/71 module has received type certification and is labeled with its own technical conformity mark and certification number as required to conform to the technical standards regulated by the Ministry of Internal Affairs and Communications (MIC) of Japan pursuant to the Radio Act of Japan.

Integration of this module into a final product does not require additional radio certification provided installation instructions are followed and no modifications of the module are allowed. Additional testing may be required:

- If the host product is subject to electrical appliance safety (for example, powered from an AC mains), the host product may require Product Safety Electrical Appliance and Material (PSE) testing. The integrator should contact their conformance laboratory to determine if this testing is required.
- There is a voluntary Electromagnetic Compatibility (EMC) test for the host product administered by VCCII: http://www.vcci.jp/vcci_e/index.html

10.4.1 LABELING AND USER INFORMATION REQUIREMENTS

The label on the final product which contains the RN4870/71 module must follow Japan marking requirements. The integrator of the module should refer to the labeling requirements for Japan available at the Ministry of Internal Affairs and Communications (MIC) website.

The RN4870 module is labeled with its own technical conformity mark and certification number. The final product in which this module is being used must have a label referring to the type certified module inside:

Contains transmitter module with certificate number:

202-SMD069

Due to the limited size of the RN4871, the technical conformity mark and certification number is not displayed on the module. Therefore, the final product in which this module is being used must have a label referring to the type certified module inside:

Contains transmitter module with certificate number:

005-101150

10.4.2 HELPFUL WEB SITES

Ministry of Internal Affairs and Communications (MIC): http://www.tele.soumu.go.jp/e/index.htm

Association of Radio Industries and Businesses (ARIB): http://www.arib.or.jp/english/

10.5 Korea

The RN4870/71 module has received certification of conformity in accordance with the Radio Waves Act. Integration of this module into a final product does not require additional radio certification provided installation instructions are followed and no modifications of the module are allowed.

10.5.1 LABELING AND USER INFORMATION REQUIREMENTS

The label on the final product which contains the RN4870/71 module must follow KC marking requirements. The integrator of the module should refer to the labeling requirements for Korea available on the Korea Communications Commission (KCC) website.

The RN4870 module is labeled with its own KC mark. The final product requires the KC mark and certificate number of the module:

MSIP-CRM-mcp-BM70BLES1FC2

Due to the limited size of the RN4871, the KC mark is not displayed on the module. Therefore, final product requires the KC mark and certificate number of the module:

MSIP-CRM-mcp-BM71BLES1FC2

10.5.2 HELPFUL WEB SITES

Korea Communications Commission (KCC): http://www.kcc.go.kr.

National Radio Research Agency (RRA): http://rra.go.kr.

10.6 Taiwan

The RN4870/71 module has received compliance approval in accordance with the Telecommunications Act. Customers seeking to use the compliance approval in their product should contact Microchip Technology sales or distribution partners to obtain a Letter of Authority.

Integration of this module into a final product does not require additional radio certification provided installation instructions are followed and no modifications of the module are allowed.

10.6.1 LABELING AND USER INFORMATION REQUIREMENTS

The RN4870 module is labeled with its own NCC ID number, and if the NCC ID is not visible when the module is installed inside another device, then the outside of the device must also display a label referring to the enclosed module. This exterior label can use wording such as the following:

CCAN15LP0501T3

Due to the limited size of the RN4871, the NCC ID is not displayed on the module. Therefore, the outside of the device must also display a label referring to the enclosed module. This exterior label can use wording such as the following:

CCAN16LP0011T7

The user's manual should contain below warning (for RF device) in traditional Chinese:

注意！
依據 低功率電波輻射性電機管理辦法
第十二條 經型式認證合格之低功率射頻電機，
非經許可，
公司、商號或使用者均不得擅自變更頻率、加大功率或變更原設計
之特性及功能。
第十四條 低功率射頻電機之使用不得影響飛航安全及干擾合法通信；
經發現有干擾現象時，應立即停用，並改善至無干擾時方得繼續使用。
前項合法通信，指依電信規定作業之無線電信。
低功率射頻電機須忍受合法通信或工業、科學及醫療用電波輻射性
電機設備之干擾。

10.6.2 HELPFUL WEB SITES

National Communications Commission (NCC): http://www.ncc.gov.tw.

10.7 China

The RN4870/71 module has received certification of conformity in accordance with the China MIIT Notice 2014-01 of State Radio Regulation Committee (SRRC) certification scheme. Integration of this module into a final product does not require additional radio certification, provided installation instructions are followed and no modifications of the module are allowed.

10.7.1 LABELING AND USER INFORMATION REQUIREMENTS

The RN4870 module is labeled with its own CMIT ID as follows:

CMIIT ID: 2016DJ5729

The RN4871 module is labeled with its own CMIT ID as follows::

CMIIT ID: 2016DJ5890

10.8 Other Regulatory Jurisdictions

Should other regulatory jurisdiction certification be required by the customer, or the customer need to recertify the module for other reasons, a certification utility is available. For further regulatory Certification Utility and documentation, contact your local Microchip Technology sales office.

© 2016-2019 Microchip Technology Inc.

10.9 Other Regulatory Information

- For information about other countries jurisdictions not covered here, refer to the http://www.microchip.com/design-centers/wireless-connectivity.
- Should other regulatory jurisdiction certification be required by the customer, or the customer needs to recertify the module for other reasons, contact Microchip for the required utilities and documentation.

11.0 ORDERING INFORMATION

Table 11-1 provides ordering information for the RN4870/71 module.

TABLE 11-1: ORDERING INFORMATION

Part Number(1)	Antenna	Shielding	Number of Pins	Operating Temperature Range
RN4870-V/RMXXX	On-Board	Yes	33	-20°C to +70°C
RN4870U-V/RMXXX	External	No	30	-20°C to +70°C
RN4871-V/RMXXX	On-Board	Yes	16	-20°C to +70°C
RN4871U-V/RMXXX	External	No	17	-20°C to +70°C
RN4870-I/RMXXX	On-Board	Yes	33	-40°C to +85°C
RN4871-I/RMXXX	On-Board	Yes	16	-40°C to +85°C

Note 1: The last three digits in P/N indicate firmware version. At the time of publication, the latest firmware version is 1.30. Ensure to check product webpage for latest part number and firmware version.

Go to http://www.microchip.com for current pricing and a list of distributors carrying Microchip products.

APPENDIX A: REVISION HISTORY

Revision A (April 2016)

This is the initial release of this document.

Revision B (October 2017)

- Added the new parts, RN4870-I/RMXXX and RN4871-I/RMXXX, released with increased operating temperature range.
- Updated Features section and removed Description section on page 1.
- Updated Table 1-1, Table 1-2, Table 1-4 and Table 11-1.
- Revised Table 2-1 through Table 2-4.
- Updated Figure 1-4, Figure 3-1, Figure 3-2, and Figure 4-7.
- Added **Section 10.7 "China"** to **Section 10.0 "Regulatory Approval"**;
- Updated Table 11-1 and **Section "Product Identification System"**.

Revision C (December 2017)

- Updated Table 2-1 to correct information for the operating temperature range.

Revision D (April 2019)

- Updated Bluetooth version from 4.2 to 5.0.
- Updated **Features and Antenna Options**.
- Updated Figure 5-2, Figure 5-3, Figure 5-4, and Figure 5-5.
- Updated Figure 9-1 and Figure 9-2 (P2_0 = 1)
- Updated **Section 7.0 "Supported Services"**
- Updated **Section 10.2 "Canada"** and **Section 10.3 "Europe"**

© 2016-2019 Microchip Technology Inc.

THE MICROCHIP WEBSITE

Microchip provides online support via our WWW site at www.microchip.com. This website is used as a means to make files and information easily available to customers. Accessible by using your favorite Internet browser, the website contains the following information:

- **Product Support** – Data sheets and errata, application notes and sample programs, design resources, user's guides and hardware support documents, latest software releases and archived software
- **General Technical Support** – Frequently Asked Questions (FAQ), technical support requests, online discussion groups, Microchip consultant program member listing
- **Business of Microchip** – Product selector and ordering guides, latest Microchip press releases, listing of seminars and events, listings of Microchip sales offices, distributors and factory representatives

CUSTOMER CHANGE NOTIFICATION SERVICE

Microchip's customer notification service helps keep customers current on Microchip products. Subscribers will receive e-mail notification whenever there are changes, updates, revisions or errata related to a specified product family or development tool of interest.

To register, access the Microchip website at www.microchip.com. Under "Support", click on "Customer Change Notification" and follow the registration instructions.

CUSTOMER SUPPORT

Users of Microchip products can receive assistance through several channels:

- Distributor or Representative
- Local Sales Office
- Field Application Engineer (FAE)
- Technical Support

Customers should contact their distributor, representative or Field Application Engineer (FAE) for support. Local sales offices are also available to help customers. A listing of sales offices and locations is included in the back of this document.

Technical support is available through the website at: http://microchip.com/support

PRODUCT IDENTIFICATION SYSTEM

To order or obtain information, for example, on pricing or delivery, refer to the factory or the listed sales office.

PART NO.	V	RM	XXX
Device	Temperature Range	Package	Firmware Revision Number

Device:	RN4870:	Ceramic Chip Antenna		
	RN4870U:	External Antenna		
	RN4871:	Ceramic Chip Antenna		
	RN4871U:	External Antenna		
Temperature Range:	V	= -20°C to +70°C	(Various)	
	I	= -40°C to +85°C	(Industrial)	
Package:	RM	= Radio Module		

Example:

RN4870-V/RM118: Various temperature

RN4870-I/RM128: Industrial temperature

Note 1: Tape and Reel identifier only appears in the catalog part number description. This identifier is used for ordering purposes and is *not* printed on the device package. Check with your Microchip Sales Office for package availability with the Tape and Reel option.

© 2016-2019 Microchip Technology Inc.

Note the following details of the code protection feature on Microchip devices:

- Microchip products meet the specification contained in their particular Microchip Data Sheet.
- Microchip believes that its family of products is one of the most secure families of its kind on the market today, when used in the intended manner and under normal conditions.
- There are dishonest and possibly illegal methods used to breach the code protection feature. All of these methods, to our knowledge, require using the Microchip products in a manner outside the operating specifications contained in Microchip's Data Sheets. Most likely, the person doing so is engaged in theft of intellectual property.
- Microchip is willing to work with the customer who is concerned about the integrity of their code.
- Neither Microchip nor any other semiconductor manufacturer can guarantee the security of their code. Code protection does not mean that we are guaranteeing the product as "unbreakable."

Code protection is constantly evolving. We at Microchip are committed to continuously improving the code protection features of our products. Attempts to break Microchip's code protection feature may be a violation of the Digital Millennium Copyright Act. If such acts allow unauthorized access to your software or other copyrighted work, you may have a right to sue for relief under that Act.

Information contained in this publication regarding device applications and the like is provided only for your convenience and may be superseded by updates. It is your responsibility to ensure that your application meets with your specifications. MICROCHIP MAKES NO REPRESENTATIONS OR WARRANTIES OF ANY KIND WHETHER EXPRESS OR IMPLIED, WRITTEN OR ORAL, STATUTORY OR OTHERWISE, RELATED TO THE INFORMATION, INCLUDING BUT NOT LIMITED TO ITS CONDITION, QUALITY, PERFORMANCE, MERCHANTABILITY OR FITNESS FOR PURPOSE. Microchip disclaims all liability arising from this information and its use. Use of Microchip devices in life support and/or safety applications is entirely at the buyer's risk, and the buyer agrees to defend, indemnify and hold harmless Microchip from any and all damages, claims, suits, or expenses resulting from such use. No licenses are conveyed, implicitly or otherwise, under any Microchip intellectual property rights unless otherwise stated.

Microchip received ISO/TS-16949:2009 certification for its worldwide headquarters, design and wafer fabrication facilities in Chandler and Tempe, Arizona; Gresham, Oregon and design centers in California and India. The Company's quality system processes and procedures are for its PIC® MCUs and dsPIC® DSCs, KEELOQ® code hopping devices, Serial EEPROMs, microperipherals, nonvolatile memory and analog products. In addition, Microchip's quality system for the design and manufacture of development systems is ISO 9001:2000 certified.

QUALITY MANAGEMENT SYSTEM CERTIFIED BY DNV

ISO/TS 16949

Trademarks

The Microchip name and logo, the Microchip logo, AnyRate, AVR, AVR logo, AVR Freaks, BitCloud, chipKIT, chipKIT logo, CryptoMemory, CryptoRF, dsPIC, FlashFlex, flexPWR, Heldo, JukeBlox, KeeLoq, Kleer, LANCheck, LINK MD, maXStylus, maXTouch, MediaLB, megaAVR, MOST, MOST logo, MPLAB, OptoLyzer, PIC, picoPower, PICSTART, PIC32 logo, Prochip Designer, QTouch, SAM-BA, SpyNIC, SST, SST Logo, SuperFlash, tinyAVR, UNI/O, and XMEGA are registered trademarks of Microchip Technology Incorporated in the U.S.A. and other countries.

ClockWorks, The Embedded Control Solutions Company, EtherSynch, Hyper Speed Control, HyperLight Load, IntelliMOS, mTouch, Precision Edge, and Quiet-Wire are registered trademarks of Microchip Technology Incorporated in the U.S.A.

Adjacent Key Suppression, AKS, Analog-for-the-Digital Age, Any Capacitor, AnyIn, AnyOut, BodyCom, CodeGuard, CryptoAuthentication, CryptoAutomotive, CryptoCompanion, CryptoController, dsPICDEM, dsPICDEM.net, Dynamic Average Matching, DAM, ECAN, EtherGREEN, In-Circuit Serial Programming, ICSP, INICnet, Inter-Chip Connectivity, JitterBlocker, KleerNet, KleerNet logo, memBrain, Mindi, MiWi, motorBench, MPASM, MPF, MPLAB Certified logo, MPLIB, MPLINK, MultiTRAK, NetDetach, Omniscient Code Generation, PICDEM, PICDEM.net, PICkit, PICtail, PowerSmart, PureSilicon, QMatrix, REAL ICE, Ripple Blocker, SAM-ICE, Serial Quad I/O, SMART-I.S., SQI, SuperSwitcher, SuperSwitcher II, Total Endurance, TSHARC, USBCheck, VariSense, ViewSpan, WiperLock, Wireless DNA, and ZENA are trademarks of Microchip Technology Incorporated in the U.S.A. and other countries.

SQTP is a service mark of Microchip Technology Incorporated in the U.S.A.

Silicon Storage Technology is a registered trademark of Microchip Technology Inc. in other countries.

GestIC is a registered trademark of Microchip Technology Germany II GmbH & Co. KG, a subsidiary of Microchip Technology Inc., in other countries.

All other trademarks mentioned herein are property of their respective companies.

© 2018, Microchip Technology Incorporated, All Rights Reserved.

ISBN: 978-1-5224-4453-4

Worldwide Sales and Service

AMERICAS

Corporate Office
2355 West Chandler Blvd.
Chandler, AZ 85224-6199
Tel: 480-792-7200
Fax: 480-792-7277
Technical Support:
http://www.microchip.com/support
Web Address:
www.microchip.com

Atlanta
Duluth, GA
Tel: 678-957-9614
Fax: 678-957-1455

Austin, TX
Tel: 512-257-3370

Boston
Westborough, MA
Tel: 774-760-0087
Fax: 774-760-0088

Chicago
Itasca, IL
Tel: 630-285-0071
Fax: 630-285-0075

Dallas
Addison, TX
Tel: 972-818-7423
Fax: 972-818-2924

Detroit
Novi, MI
Tel: 248-848-4000

Houston, TX
Tel: 281-894-5983

Indianapolis
Noblesville, IN
Tel: 317-773-8323
Fax: 317-773-5453
Tel: 317-536-2380

Los Angeles
Mission Viejo, CA
Tel: 949-462-9523
Fax: 949-462-9608
Tel: 951-273-7800

Raleigh, NC
Tel: 919-844-7510

New York, NY
Tel: 631-435-6000

San Jose, CA
Tel: 408-735-9110
Tel: 408-436-4270

Canada - Toronto
Tel: 905-695-1980
Fax: 905-695-2078

ASIA/PACIFIC

Australia - Sydney
Tel: 61-2-9868-6733

China - Beijing
Tel: 86-10-8569-7000

China - Chengdu
Tel: 86-28-8665-5511

China - Chongqing
Tel: 86-23-8980-9588

China - Dongguan
Tel: 86-769-8702-9880

China - Guangzhou
Tel: 86-20-8755-8029

China - Hangzhou
Tel: 86-571-8792-8115

China - Hong Kong SAR
Tel: 852-2943-5100

China - Nanjing
Tel: 86-25-8473-2460

China - Qingdao
Tel: 86-532-8502-7355

China - Shanghai
Tel: 86-21-3326-8000

China - Shenyang
Tel: 86-24-2334-2829

China - Shenzhen
Tel: 86-755-8864-2200

China - Suzhou
Tel: 86-186-6233-1526

China - Wuhan
Tel: 86-27-5980-5300

China - Xian
Tel: 86-29-8833-7252

China - Xiamen
Tel: 86-592-2388138

China - Zhuhai
Tel: 86-756-3210040

ASIA/PACIFIC

India - Bangalore
Tel: 91-80-3090-4444

India - New Delhi
Tel: 91-11-4160-8631

India - Pune
Tel: 91-20-4121-0141

Japan - Osaka
Tel: 81-6-6152-7160

Japan - Tokyo
Tel: 81-3-6880- 3770

Korea - Daegu
Tel: 82-53-744-4301

Korea - Seoul
Tel: 82-2-554-7200

Malaysia - Kuala Lumpur
Tel: 60-3-7651-7906

Malaysia - Penang
Tel: 60-4-227-8870

Philippines - Manila
Tel: 63-2-634-9065

Singapore
Tel: 65-6334-8870

Taiwan - Hsin Chu
Tel: 886-3-577-8366

Taiwan - Kaohsiung
Tel: 886-7-213-7830

Taiwan - Taipei
Tel: 886-2-2508-8600

Thailand - Bangkok
Tel: 66-2-694-1351

Vietnam - Ho Chi Minh
Tel: 84-28-5448-2100

EUROPE

Austria - Wels
Tel: 43-7242-2244-39
Fax: 43-7242-2244-393

Denmark - Copenhagen
Tel: 45-4450-2828
Fax: 45-4485-2829

Finland - Espoo
Tel: 358-9-4520-820

France - Paris
Tel: 33-1-69-53-63-20
Fax: 33-1-69-30-90-79

Germany - Garching
Tel: 49-8931-9700

Germany - Haan
Tel: 49-2129-3766400

Germany - Heilbronn
Tel: 49-7131-67-3636

Germany - Karlsruhe
Tel: 49-721-625370

Germany - Munich
Tel: 49-89-627-144-0
Fax: 49-89-627-144-44

Germany - Rosenheim
Tel: 49-8031-354-560

Israel - Ra'anana
Tel: 972-9-744-7705

Italy - Milan
Tel: 39-0331-742611
Fax: 39-0331-466781

Italy - Padova
Tel: 39-049-7625286

Netherlands - Drunen
Tel: 31-416-690399
Fax: 31-416-690340

Norway - Trondheim
Tel: 47-7288-4388

Poland - Warsaw
Tel: 48-22-3325737

Romania - Bucharest
Tel: 40-21-407-87-50

Spain - Madrid
Tel: 34-91-708-08-90
Fax: 34-91-708-08-91

Sweden - Gothenberg
Tel: 46-31-704-60-40

Sweden - Stockholm
Tel: 46-8-5090-4654

UK - Wokingham
Tel: 44-118-921-5800
Fax: 44-118-921-5820

© 2019 Microchip Technology Inc.

SYST-30AXGZ143 - Data Sheet - RN4870/71 Bluetooth Low Energy Module Data Sheet

Affected Catalog Part Numbers(CPN)

RN4870-I/RM128
RN4870-I/RM130
RN4870-V/RM118
RN4870U-V/RM118
RN4871-I/RM128
RN4871-I/RM130
RN4871-V/RM118
RN4871-V/RM130
RN4871U-V/RM118