Product Change Notification - SYST-16IAPK635

Date:

17 Jan 2019

Product Category:

Ethernet PHYs

Affected CPNs:

Notification subject:

Data Sheet - KSZ8061MNX/MNG 10BASE-T/100 BASE-TX Physical Layer Transceiver

Notification text:

SYST-16IAPK635

Microchip has released a new DeviceDoc for the KSZ8061MNX/MNG 10BASE-T/100 BASE-TX Physical Layer Transceiver of devices. If you are using one of these devices please read the document located at KSZ8061MNX/MNG 10BASE-T/100 BASE-TX Physical Layer Transceiver.

Notification Status: Final

Description of Change:

1) Updated the description of the following on table 4-3 "Standard Register Description" : Address 18.10, Register 18h - Expanded Control; Address 1F.11, Register 1Fh - PHY Control 2; Address 1C.4, Register 1Ch - Function Control
2) Added a new row for Crystal Drive Level on Table 9-1, "25-MHz Crystal/Reference Clock Selection Criteria"
3) Corrected the arrows for INTRP and SIGNAL DETECT lines on Figure 1-1, "System Block Diagram"
4) Updated the step 4 under steps for short cables, and the step 3 under steps for long cables.
5) Added a new paragraph on LinkMD® Cable Diagnostics on page 24.
6) Updated the last sentence of the first paragraph to say “environmental EM noise.” On LinkMD®+ Enhanced Diagnostics: Receive Signal Quality Indicator on page 24
7) Updated the first paragraph Reference Clock — Connection and Selection on page 56
8) Added Magnetic - Connection and Selection on page 57

Impacts to Data Sheet: None

Reason for Change: To Improve Manufacturability

Change Implementation Status: Complete

Date Document Changes Effective: 17 Jan 2019

NOTE: Please be advised that this is a change to the document only the product has not been changed.

Markings to Distinguish Revised from Unrevised Devices: N/A

Attachment(s):

KSZ8061MNX/MNG 10BASE-T/100 BASE-TX Physical Layer Transceiver

Please contact your local Microchip sales office with questions or concerns regarding this notification.

Terms and Conditions:

If you wish to receive Microchip PCNs via email please register for our PCN email service at our PCN home page select register then fill in the required fields. You will find instructions about registering for Microchips PCN email service in the PCN FAQ section.
If you wish to change your PCN profile, including opt out, please go to the PCN home page select login and sign into your myMicrochip account. Select a profile option from the left navigation bar and make the applicable selections.

KSZ8061MNX/MNG

10BASE-T/100BASE-TX Physical Layer Transceiver

Highlights

- Single-Chip Ethernet Physical Layer Transceiver (PHY)
- Quiet-Wire® Technology to Reduce Line Emissions and Enhance Immunity
- Ultra-Deep Sleep Standby Mode
- AEC-Q100 Grade 2 Automotive

Target Applications

- Industrial Control
- Vehicle On-Board Diagnostics (OBD)
- Automotive Gateways
- Camera and Sensor Networking
- Infotainment

Features

- Quiet-Wire Programmable EMI Filter
- MII Interface with MDC/MDIO Management Interface for Register Configuration
- On-Chip Termination Resistors for the Differential Pairs
- LinkMD®+ Receive Signal Quality Indicator
- Fast Start-Up and Link
- Ultra-Deep Sleep Standby Mode: CPU or Signal Detect Activated
- Loopback Modes for Diagnostics
- Programmable Interrupt Output

© 2016-2019 Microchip Technology Inc.

TO OUR VALUED CUSTOMERS

It is our intention to provide our valued customers with the best documentation possible to ensure successful use of your Microchip products. To this end, we will continue to improve our publications to better suit your needs. Our publications will be refined and enhanced as new volumes and updates are introduced.

If you have any questions or comments regarding this publication, please contact the Marketing Communications Department via E-mail at **docerrors@microchip.com**. We welcome your feedback.

Most Current Data Sheet

To obtain the most up-to-date version of this data sheet, please register at our Worldwide Web site at:

http://www.microchip.com

You can determine the version of a data sheet by examining its literature number found on the bottom outside corner of any page. The last character of the literature number is the version number, (e.g., DS30000000A is version A of document DS30000000).

Errata

An errata sheet, describing minor operational differences from the data sheet and recommended workarounds, may exist for current devices. As device/documentation issues become known to us, we will publish an errata sheet. The errata will specify the revision of silicon and revision of document to which it applies.

To determine if an errata sheet exists for a particular device, please check with one of the following:

- Microchip's Worldwide Web site; http://www.microchip.com
- Your local Microchip sales office (see last page)

When contacting a sales office, please specify which device, revision of silicon and data sheet (include -literature number) you are using.

Customer Notification System

Register on our web site at **www.microchip.com** to receive the most current information on all of our products.

© 2016-2019 Microchip Technology Inc.

Table of Contents

1.0 Introduction 4
2.0 Pin Description and Configuration 5
3.0 Functional Description 13
4.0 Register Descriptions 30
5.0 Operational Characteristics 43
6.0 Electrical Characteristics 44
7.0 Timing Diagrams 48
8.0 Reset Circuit 55
9.0 Reference Clock — Connection and Selection 56
10.0 Magnetic – Connection and Selection 57
11.0 Package Outlines 58
Appendix A: Data Sheet Revision History 62
The Microchip Web Site 63
Customer Change Notification Service 63
Customer Support 63
Product Identification System 64

1.0 INTRODUCTION

1.1 General Description

The KSZ8061MNX/MNG is a single-chip, 10BASE-T/100BASE-TX, Ethernet physical layer transceiver for transmission and reception of data over unshielded twisted pair (UTP) cable.

The KSZ8061MNX/MNG features Quiet-Wire® internal filtering to reduce line emissions. It is ideal for applications, such as automotive or industrial networks, where stringent radiated emission limits need to be met. Quiet-Wire can use low-cost unshielded cable, where previously only shielded cable solutions were possible. The KSZ8061MNX/MNG also features enhanced immunity to environmental EM noise.

The KSZ8061MNX/MNG offers the Media Independent Interface (MII) for direct connection with MII-compliant Ethernet MAC processors and switches.

It is designed to exceed Automotive AEC-Q100 and EMC requirements, and features an extended temperature range of -40°C to +105°C.

The KSZ8061MNX is supplied in a 32-lead, 5 mm × 5 mm QFN or WQFN package, while the KSZ8061MNG is in a 48-lead, 7 mm × 7 mm QFN package.

The KSZ8061RNB and KSZ8061RND devices have an RMII interface and are described in a separate data sheet.

FIGURE 1-1: SYSTEM BLOCK DIAGRAM

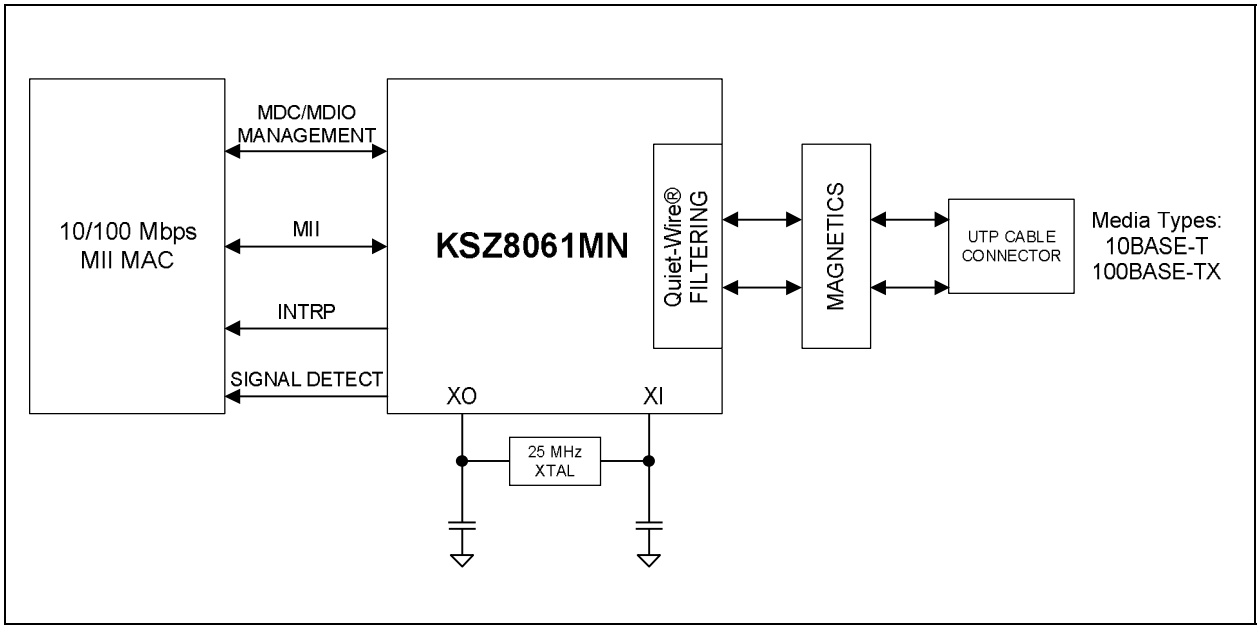

© 2016-2019 Microchip Technology Inc.

2.0 PIN DESCRIPTION AND CONFIGURATION

FIGURE 2-1: 32-QFN OR WQFN KSZ8061MNX PIN ASSIGNMENT (TOP VIEW)

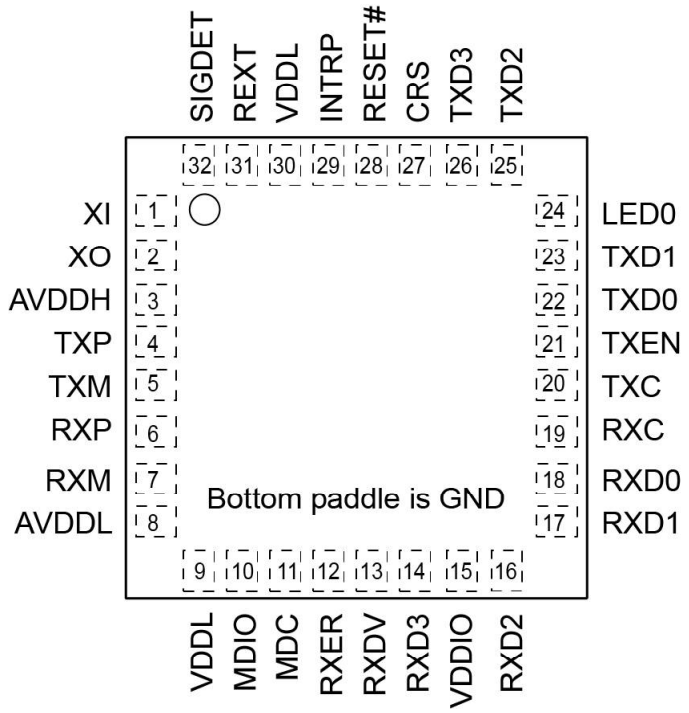

TABLE 2-1: SIGNALS - KSZ8061MNX (32-PIN PACKAGES)

Pin Number	Name	Type (Note 2-1)	Description
1	XI	I	Crystal/Oscillator/External Clock Input 25 MHz ±50ppm. This input references the AVDDH power supply.
2	XO	O	Crystal feedback for 25-MHz crystal This pin is a no connect if oscillator or external clock source is used.
3	AVDDH	Pwr	3.3V supply for analog TX drivers and XI/XO oscillator circuit
4	TXP	I/O	Physical transmit or receive signal (+ differential) Transmit when in MDI mode, Receive when in MDI-X mode
5	TXM	I/O	Physical transmit or receive signal (– differential) Transmit when in MDI mode, Receive when in MDI-X mode
6	RXP	I/O	Physical receive or transmit signal (+ differential) Receive when in MDI mode, Transmit when in MDI-X mode
7	RXM	I/O	Physical receive or transmit signal (– differential) Receive when in MDI mode, Transmit when in MDI-X mode
8	AVDDL	Pwr	1.2V (nominal) supply for analog core
9	VDDL	Pwr	1.2V (nominal) supply for digital core

TABLE 2-1: SIGNALS - KSZ8061MNX (32-PIN PACKAGES) (CONTINUED)

Pin Number	Name	Type (Note 2-1)	Description
10	MDIO	Ipu/Opu	Management Interface (MIIM) Data I/O This pin has a weak pull-up, is open-drain like, and requires an external 1.0-kΩ pull-up resistor.
11	MDC	Ipu	Management Interface (MIIM) Clock Input This clock pin is synchronous to the MDIO data pin.
12	RXER/QWF	Ipd/O	MII Receive Error Output Config mode: The pull-up or pull-down value is latched as QWF at the deassertion of reset. See Table 2-2 for details.
13	RXDV/ CONFIG2	Ipd/O	MII Receive Data Valid Output Config mode: The pull-up or pull-down value is latched as CONFIG2 at the deassertion of reset. See Table 2-2 for details.
14	RXD3/ PHYAD0	Ipu/O	MII Receive Data Output[3] (Note 2-2) Config mode: The pull-up or pull-down value is latched as PHYADDR[0] at the deassertion of reset. See Table 2-2 for details.
15	VDDIO	Pwr	3.3V, 2.5V, or 1.8V supply for digital I/O
16	RXD2/ PHYAD1	Ipd/O	MII Receive Data Output[2] (Note 2-2) Config mode: The pull-up or pull-down value is latched as PHYADDR[1] at the deassertion of reset. See Table 2-2 for details.
17	RXD1/ PHYAD2	Ipd/O	MII Receive Data Output[1] (Note 2-2) Config mode: The pull-up or pull-down value is latched as PHYADDR[2] at the deassertion of reset. See Table 2-2 for details.
18	RXD0/ AUTONEG	Ipu/O	MII Receive Data Output[0] (Note 2-2) Config mode: The pull-up or pull-down value is latched as AUTONEG at the deassertion of reset. See Table 2-2 for details.
19	RXC/ CONFIG0	Ipd/O	MII Receive Clock Output Config mode: The pull-up or pull-down value is latched as CONFIG0 at the deassertion of reset. See Table 2-2 for details.
20	TXC	O	MII Transmit Clock Output
21	TXEN	I	MII Transmit Enable Input
22	TXD0	I	MII Transmit Data Input[0] (Note 2-3)
23	TXD1	I	MII Transmit Data Input[1] (Note 2-3)
24	LED0	O	LED0 Output
25	TXD2	I	MII Transmit Data Input[2] (Note 2-3)
26	TXD3	I	MII Transmit Data Input[3] (Note 2-3)
27	CRS/ CONFIG1	Ipd/O	MII Carrier Sense Output Config mode: The pull-up or pull-down value is latched as CONFIG1 at the deassertion of reset. See Table 2-2 for details.
28	RESET#	Ipu	Chip Reset (active low)
29	INTRP/ NAND_Tree#	Ipu/O	Programmable Interrupt Output (active low (default) or active high) This pin has a weak pull-up, is open drain like, and requires an external 1.0-kΩ pull-up resistor. Config mode: The pull-up or pull-down value is latched as NAND_Tree# at the deassertion of reset. See Table 2-2 for details.
30	VDDL	Pwr	1.2V (nominal) supply for digital (and analog)
31	REXT	I	Set PHY transmit output current Connect a 6.04-kΩ 1% resistor from this pin to ground.
32	SIGDET	O	Signal Detect, active high
Bottom Paddle	GND	Gnd	Ground

© 2016-2019 Microchip Technology Inc.

Note 2-1 Pwr = power supply
Gnd = ground
I = input
O = output
I/O = bi-directional
Ipu = Input with internal pull-up (see Section 6.0, "Electrical Characteristics" for value)
Ipd = Input with internal pull-down (see Section 6.0, "Electrical Characteristics" for value)
Ipu/O = Input with internal pull-up (see Section 6.0, "Electrical Characteristics" for value) during power-up or reset; output pin otherwise.
Ipd/O = Input with internal pull-down (see Section 6.0, "Electrical Characteristics" for value) during power-up or reset; output pin otherwise.
Ipu/Opu = Input and output with internal pull-up (see Section 6.0, "Electrical Characteristics" for value)

Note 2-2 MII mode: The RXD[3:0] bits are synchronous with RXC. When RXDV is asserted, RXD[3:0] presents valid data to the MAC device.

Note 2-3 MII mode: The TXD[3:0] bits are synchronous with TXC. When TXEN is asserted, TXD[3:0] accepts valid data from the MAC device.

The strap-in pins are latched at the deassertion of reset. In some systems, the MAC MII receive input pins may drive high or low during power-up or reset, and consequently cause the PHY strap-in pins on the MII signals to be latched to the unintended high or low states. In this case, external pull-up or pull-down resistors (4.7 kΩ) should be added on these PHY strap-in pins to ensure the intended values are strapped in correctly.

TABLE 2-2: STRAP-IN OPTIONS - KSZ8061MNX (32-PIN PACKAGES)

Pin Number	Pin Name	Type (Note 2-1)	Description
17 16 14	RXD1/PHYAD2 RXD2/PHYAD1 RXD3/PHYAD0	Ipd/O Ipd/O Ipu/O	The PHY Address is latched at deassertion of reset and is configurable to any value from 0 to 7. The default PHY Address is 00001. PHY Address bits [4:3] are set to 00 by default.
13 27 19	RXDV/CONFIG2 CRS/CONFIG1 RXC/CONFIG0	Ipd/O Ipd/O Ipd/O	The CONFIG[2:0] strap-in pins are latched at the deassertion of reset. **CONFIG[2:0]** — **Mode** 000 (default) — MII normal mode; Auto MDI/MDI-X disabled. 001 — Reserved, not used. 010 — MII normal mode; Auto MDI/MDI-X enabled. 011 - 101 — Reserved, not used. 110 — MII Back-to-Back; Auto MDI/MDI-X enabled. 111 — Reserved, not used.
18	RXD0/ AUTONEG	Ipu/O	Auto-Negotiation Disable Pull-up (default) = Disable Auto-Negotiation Pull-down = Enable Auto-Negotiation At the deassertion of reset, this pin value is inverted, and then latched into register 0h, bit [12].
29	INTRP/ NAND_Tree#	Ipu/O	NAND Tree mode Pull-up (default) = Disable NAND Tree (normal operation) Pull-down = Enable NAND Tree At the deassertion of reset, this pin value is latched by the chip.
12	RXER/QWF	Ipd/O	Quiet-Wire® Filtering Disable Pull-up = Disable Quiet-Wire Filtering Pull-down (default) = Enable Quiet-Wire Filtering At the deassertion of reset, this pin value is latched by the chip.

Note 2-1 Ipu/O = Input with internal pull-up (see Section 6.0, "Electrical Characteristics" for value) during power-up or reset; output pin otherwise.
Ipd/O = Input with internal pull-down (see Section 6.0, "Electrical Characteristics" for value) during power-up or reset; output pin otherwise.

© 2016-2019 Microchip Technology Inc.

FIGURE 2-2: 48-QFN KSZ8061MNG PIN ASSIGNMENT (TOP VIEW)

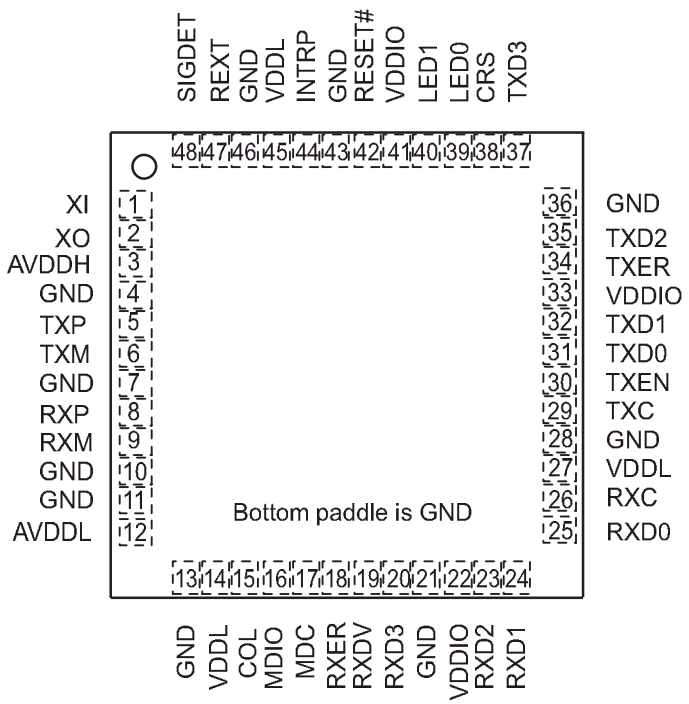

TABLE 2-3: SIGNALS - KSZ8061MNG (48-PIN PACKAGE)

Pin Number	Pin Name	Type (Note 2-1)	Description
1	XI	I	Crystal/Oscillator/External Clock Input 25 MHz ±50 ppm. This input references the AVDDH power supply.
2	XO	O	Crystal feedback for 25-MHz crystal This pin is a no connect if oscillator or external clock source is used.
3	AVDDH	Pwr	3.3V supply for analog TX drivers and XI/XO oscillator circuit
4	GND	Gnd	Ground
5	TXP	I/O	Physical transmit or receive signal (+ differential)
6	TXM	I/O	Physical transmit or receive signal (– differential)
7	GND	Gnd	Ground
8	RXP	I/O	Physical receive or transmit signal (+ differential)
9	RXM	I/O	Physical receive or transmit signal (– differential)
10	GND	Gnd	Ground
11	GND	Gnd	Ground
12	AVDDL	Pwr	1.2V (nominal) supply for analog core
13	GND	Gnd	Ground
14	VDDL	Pwr	1.2V (nominal) supply for digital core

TABLE 2-3: SIGNALS - KSZ8061MNG (48-PIN PACKAGE) (CONTINUED)

Pin Number	Pin Name	Type (Note 2-1)	Description
15	COL/B-CAST_OFF	Ipd/O	MII Collision Detect Output Config mode: The pull-up or pull-down value is latched as B-CAST_OFF at the deassertion of reset. See Table 2-4 for details.
16	MDIO	Ipu/Opu	Management Interface (MIIM) Data I/O This pin has a weak pull-up, is open-drain like, and requires an external 1.0-kΩ pull-up resistor.
17	MDC	Ipu	Management Interface (MIIM) Clock Input This clock pin is synchronous to the MDIO data pin.
18	RXER/QWF	Ipd/O	MII Receive Error Output Config mode: The pull-up or pull-down value is latched as QWF at the deassertion of reset. See Table 2-4 for details.
19	RXDV/ CONFIG2	Ipd/O	MII Receive Data Valid Output Config mode: The pull-up or pull-down value is latched as CONFIG2 at the deassertion of reset. See Table 2-4 for details.
20	RXD3/PHYAD0	Ipu/O	MII Receive Data Output[3] (Note 2-2) Config mode: The pull-up or pull-down value is latched as PHYADDR[0] at the deassertion of reset. See Table 2-4 for details.
21	GND	Gnd	Ground
22	VDDIO	Pwr	3.3V, 2.5V, or 1.8V supply for digital I/O
23	RXD2/PHYAD1	Ipd/O	MII Receive Data Output[2] (Note 2-2) Config mode: The pull-up or pull-down value is latched as PHYADDR[1] at the deassertion of reset. See Table 2-4 for details.
24	RXD1/PHYAD2	Ipd/O	MII Receive Data Output[1] (Note 2-2) Config mode: The pull-up or pull-down value is latched as PHYADDR[2] at the deassertion of reset. See Table 2-4 for details.
25	RXD0/ DUPLEX	Ipu/O	MII Receive Data Output[0] (Note 2-2) Config mode: The pull-up or pull-down value is latched as DUPLEX at the deassertion of reset. See Table 2-4 for details.
26	RXC/CONFIG0	Ipd/O	MII Receive Clock Output Config mode: The pull-up or pull-down value is latched as CONFIG0 at the deassertion of reset. See Table 2-4 for details.
27	VDDL	Pwr	1.2V (nominal) supply for digital core
28	GND	Gnd	Ground
29	TXC	O	MII Transmit Clock Output
30	TXEN	I	MII Transmit Enable Input
31	TXD0	I	MII Transmit Data Input[0] (Note 2-3)
32	TXD1	I	MII Transmit Data Input[1] (Note 2-3)
33	VDDIO	Pwr	3.3V, 2.5V, or 1.8V supply for digital I/O
34	TXER	Ipd	MII Transmit Error Input If the MAC does not provide a TXER output signal, this pin may be unconnected.
35	TXD2	I	MII Transmit Data Input[2] (Note 2-3)
36	GND	Gnd	Ground
37	TXD3	I	MII Transmit Data Input[3] (Note 2-3)
38	CRS/CONFIG1	Ipd/O	MII Carrier Sense Output Config mode: The pull-up or pull-down value is latched as CONFIG1 at the deassertion of reset. See Table 2-4 for details.

© 2016-2019 Microchip Technology Inc.

TABLE 2-3: SIGNALS - KSZ8061MNG (48-PIN PACKAGE) (CONTINUED)

Pin Number	Pin Name	Type (Note 2-1)	Description
39	LED0/ AUTONEG	Ipu/O	LED0 Active low. Its function is programmable; by default it indicates link/ activity. Config mode: The pull-up or pull-down value is latched as AUTONEG at the deassertion of reset. See Table 2-4 for details.
40	LED1/SPEED	Ipu/O	LED1 Active low. Its function is programmable; by default it indicates link speed. Config mode: The pull-up or pull-down value is latched as SPEED at the deassertion of reset. See Table 2-4 for details.
41	VDDIO	Pwr	3.3V, 2.5V, or 1.8V supply for digital I/O
42	RESET#	Ipu	Chip Reset (active low)
43	GND	Gnd	Ground
44	INTRP/ NAND_Tree#	Ipu/O	Programmable Interrupt Output [active low (default) or active high] This pin has a weak pull-up, is open drain like, and requires an external 1.0-kΩ pull-up resistor. Config mode: The pull-up or pull-down value is latched as NAND_Tree# at the deassertion of reset. See Table 2-4 for details.
45	VDDL	Pwr	1.2V (nominal) supply for digital (and analog)
46	GND	Gnd	Ground
47	REXT	I	Set PHY transmit output current. Connect a 6.04-kΩ 1% resistor from this pin to ground.
48	SIGDET	O	Signal Detect, active high
Bottom Paddle	GND	Gnd	Ground

Note 2-1 Pwr = power supply
Gnd = ground
I = input
O = output
I/O = bi-directional
Ipu = Input with internal pull-up (see Section 6.0, "Electrical Characteristics" for value)
Ipd = Input with internal pull-down (see Section 6.0, "Electrical Characteristics" for value)
Ipu/O = Input with internal pull-up (see Section 6.0, "Electrical Characteristics" for value) during power-up/reset; output pin otherwise.
Ipd/O = Input with internal pull-down (see Section 6.0, "Electrical Characteristics" for value) during power-up/reset; output pin otherwise.
Ipu/Opu = Input and output with internal pull-up (see Section 6.0, "Electrical Characteristics" for value)

Note 2-2 MII mode: The RXD[3:0] bits are synchronous with RXC. When RXDV is asserted, RXD[3:0] presents valid data to the MAC device.

Note 2-3 MII mode: The TXD[3:0] bits are synchronous with TXC. When TXEN is asserted, TXD[3:0] accepts valid data from the MAC device.

The strap-in pins are latched at the deassertion of reset. In some systems, the MAC MII receive input pins may drive high or low during power-up or reset, and consequently cause the PHY strap-in pins on the MII signals to be latched to the unintended high or low states. In this case, external pull-ups or pull-down resistors (4.7 kΩ) should be added on these PHY strap-in pins to ensure the intended values are strapped in correctly.

TABLE 2-4: STRAP-IN OPTIONS - KSZ8061MNG (48-PIN PACKAGE)

Pin Number	Pin Name	Type (Note 2-1)	Description
24 23 20	RXD1/PHYAD2 RXD2/PHYAD1 RXD3/PHYAD0	Ipd/O Ipd/O Ipu/O	The PHY Address is latched at deassertion of reset and is configurable to any value from 0 to 7. The default PHY Address is 00001. PHY Address bits [4:3] are set to 00 by default.
19 38 26	RXDV/CONFIG2 CRS/CONFIG1 RXC/CONFIG0	Ipd/O Ipd/O Ipd/O	The CONFIG[2:0] strap-in pins are latched at the deassertion of reset. **CONFIG[2:0]** — **Mode** 000 (default) — MII normal mode; Auto MDI/MDI-X disabled. 001 — Reserved, not used. 010 — MII normal mode; Auto MDI/MDI-X enabled. 011 - 101 — Reserved, not used. 110 — MII normal mode; Auto MDI/MDI-X enabled. 111 — Reserved, not used.
39	LED0/AUTONEG	Ipu/O	Auto-Negotiation Enable Pull-up (default) = Enable Auto-Negotiation Pull-down = Disable Auto-Negotiation At the deassertion of reset, this pin value is latched into register 0h, bit [12].
44	INTRP/ NAND_Tree#	Ipu/O	NAND Tree mode Pull-up (default) = Disable Pull-down = Enable At the deassertion of reset, this pin value is latched by the chip.
18	RXER/QWF	Ipd/O	Quiet-Wire Filtering Disable Pull-up = Disable Quiet-Wire Filtering Pull-down (default) = Enable Quiet-Wire Filtering At the deassertion of reset, this pin value is latched by the chip.
40	LED1/SPEED	Ipu/O	Speed mode Pull-up (default) = 100 Mbps Pull-down = 10 Mbps At the deassertion of reset, this pin value is latched into register 0h, bit [13] as the speed select, and also is latched into register 4h (auto-negotiation advertisement) as the speed capability support.
25	RXD0/DUPLEX	Ipu/O	Duplex mode Pull-up (default) = Half-duplex Pull-down = Full-duplex At the deassertion of reset, this pin value is inverted, and then latched into register 0h, bit [8].
15	COL/ B-CAST_OFF	Ipd/O	Broadcast off – for PHY Address 0 Pull-up = PHY Address 0 is set as a unique PHY address. Pull-down (default) = PHY Address 0 is set as a broadcast PHY address. At the deassertion of reset, this pin value is latched by the chip.

Note 2-1 Ipu/O = Input with internal pull-up (see Section 6.0, "Electrical Characteristics" for value) during power-up/reset; output pin otherwise.
Ipd/O = Input with internal pull-down (see Section 6.0, "Electrical Characteristics" for value) during power-up/reset; output pin otherwise.

© 2016-2019 Microchip Technology Inc.

3.0 FUNCTIONAL DESCRIPTION

The KSZ8061MN is an integrated Fast Ethernet transceiver that features Quiet-Wire® internal filtering to reduce line emissions. When Quiet-Wire filtering is disabled, it is fully compliant with the IEEE 802.3 Specification. The KSZ8061 also has a high noise immunity.

On the copper media side, the KSZ8061MN supports 10BASE-T and 100BASE-TX for transmission and reception of data over a standard CAT-5 or a similar unshielded twisted pair (UTP) cable and HP Auto MDI/MDI-X for reliable detection of and correction for straight-through and crossover cables.

On the MAC processor side, the KSZ8061MN offers the Media Independent Interface (MII) for direct connection with MII-compliant Ethernet MAC processors and switches.

The MII management bus gives the MAC processor complete access to the KSZ8061MN control and status registers. Additionally, an interrupt pin eliminates the need for the processor to poll for PHY status change.

Auto-negotiation and Auto MDI/MDI-X can be disabled at power-on to significantly reduce initial time to link up.

A signal detect pin (SIGDET) is available to indicate when the link partner is inactive. An option is available for the KSZ8061MN to automatically enter Ultra-Deep Sleep mode when SIGDET is deasserted. Ultra-Deep Sleep mode may also be entered by command of the MAC processor. Additional low power modes are available.

3.1 Transceiver

3.1.1 100BASE-TX TRANSMIT

The 100BASE-TX transmit function performs parallel-to-serial conversion, 4B/5B encoding, scrambling, NRZ-to-NRZI conversion, and MLT3 encoding and transmission.

The circuitry starts with a parallel-to-serial conversion that converts the MII data from the MAC into a 125-MHz serial bit stream. The data and control stream is then converted into 4B/5B coding and followed by a scrambler. The serialized data is further converted from NRZ-to-NRZI format, and then transmitted in MLT3 current output. The output current is set by a precision external resistor on REXT for the 1:1 transformer ratio.

The output signal has a typical rise or fall time of 4 ns and complies with the ANSI TP-PMD standard regarding amplitude balance, overshoot, and timing jitter. The wave-shaped 10BASE-T output is also incorporated into the 100BASE-TX transmitter.

3.1.2 100BASE-TX RECEIVE

The 100BASE-TX receiver function performs adaptive equalization, DC restoration, MLT3-to-NRZI conversion, data and clock recovery, NRZI-to-NRZ conversion, descrambling, 4B/5B decoding, and serial-to-parallel conversion.

The receiving side starts with the equalization filter to compensate for inter-symbol interference (ISI) over the twisted pair cable. Since the amplitude loss and phase distortion is a function of the cable length, the equalizer must adjust its characteristics to optimize performance. In this design, the variable equalizer makes an initial estimation based on comparisons of incoming signal strength against some known cable characteristics, and then tunes itself for optimization. This is an ongoing process and self-adjusts against environmental changes such as temperature variations.

Next, the equalized signal goes through a DC restoration and data conversion block. The DC restoration circuit is used to compensate for the effect of baseline wander and to improve the dynamic range. The differential data conversion circuit converts the MLT3 format back to NRZI. The slicing threshold is also adaptive.

The clock recovery circuit extracts the 125-MHz clock from the edges of the NRZI signal. This recovered clock is then used to convert the NRZI signal into the NRZ format. This signal is sent through the descrambler followed by the 4B/5B decoder. Finally, the NRZ serial data is converted to the MII format and provided as the input data to the MAC.

3.1.3 SCRAMBLER/DE-SCRAMBLER (100BASE-TX ONLY)

The scrambler is used to spread the power spectrum of the transmitted signal to reduce EMI and baseline wander. The descrambler is needed to recover the scrambled signal.

3.1.4 10BASE-T TRANSMIT

The 10BASE-T drivers are incorporated with the 100BASE-TX drivers to allow for transmission using the same magnetic. The drivers perform internal wave-shaping and pre-emphasis, and output 10BASE-T signals with a typical amplitude of 2.5V peak. The 10BASE-T signals have harmonic contents that are at least 27 dB below the fundamental frequency when driven by an all-ones Manchester-encoded signal.

© 2016-2019 Microchip Technology Inc.

3.1.5 10BASE-T RECEIVE

On the receive side, input buffer and level detecting squelch circuits are employed. A differential input receiver circuit and a PLL performs the decoding function. The Manchester-encoded data stream is separated into clock signal and NRZ data. A squelch circuit rejects signals with levels less than 400 mV or with short pulse widths to prevent noise at the RXP and RXM inputs from falsely triggering the decoder. When the input exceeds the squelch limit, the PLL locks onto the incoming signal and the KSZ8061MN decodes a data frame. The receive clock is kept active during idle periods in between data reception.

3.1.6 SQE AND JABBER FUNCTION (10BASE-T ONLY; NOT SUPPORTED IN 32-PIN PACKAGE)

In 10BASE-T operation, a short pulse is put out on the COL pin after each frame is transmitted. This SQE test is required as part of the 10BASE-T transmit/receive path. If transmit enable (TXEN) is high for more than 20 ms (jabbering), the 10BASE-T transmitter is disabled and COL is asserted high. If TXEN is then driven low for more than 250 ms, the 10BASE-T transmitter is re-enabled and COL is deasserted (returns to low).

3.1.7 PLL CLOCK SYNTHESIZER

The KSZ8061MN generates all internal clocks and all external clocks for system timing from an external 25-MHz crystal, oscillator, or reference clock.

3.1.8 AUTO-NEGOTIATION

The KSZ8061MN conforms to the auto-negotiation protocol, defined in Clause 28 of the IEEE 802.3 Specification. Auto-negotiation allows unshielded twisted pair (UTP) link partners to select the highest common mode of operation.

During auto-negotiation, link partners advertise capabilities across the UTP link to each other and then compare their own capabilities with those they received from their link partners. The highest speed and duplex setting that is common to the two link partners is selected as the mode of operation.

The following list shows the speed and duplex operation mode from highest to lowest priority:

- Priority 1: 100BASE-TX, full-duplex
- Priority 2: 100BASE-TX, half-duplex
- Priority 3: 10BASE-T, full-duplex
- Priority 4: 10BASE-T, half-duplex

If the KSZ8061MN is using auto-negotiation, but its link partner is not, then the KSZ8061MN sets its operating speed by observing the signal at its receiver. This is known as parallel detection and allows the KSZ8061MN to establish link by listening for a fixed signal protocol in the absence of auto-negotiation advertisement protocol. Duplex is set by register 0h, bit [8] because the KSZ8061MN cannot determine duplex by parallel detection.

If auto-negotiation is disabled, the speed is set by register 0h, bit [13], and the duplex is set by register 0h, bit [8]. For the 48-pin device, these two bits are initialized at power-up or reset by strapping options on pins 40 and 25, respectively. For the 32-pin device, the default is 100BASE-TX, full-duplex, and there are no strapping options to change this default.

Auto-negotiation is enabled or disabled by hardware pin strapping (AUTONEG) and by software (register 0h, bit [12]). By default, auto-negotiation is enabled in the 48-pin device after power-up or hardware reset, but it may be disabled by pulling the LED0 pin low at that time. For the 32-pin device, auto-negotiation is disabled by default, but it may be enabled by pulling the RXD0 pin low during reset. Afterwards, auto-negotiation can be enabled or disabled by register 0h, bit [12]. When the link is 10BASE-T or the link partner is using auto-negotiation, and the Ultra-Deep Sleep mode is used, then the Signal Detect assertion timing delay bit, register 14h bit [1], must be set.

The auto-negotiation link up process is shown in Figure 3-1.

© 2016-2019 Microchip Technology Inc.

FIGURE 3-1: AUTO-NEGOTIATION FLOW CHART

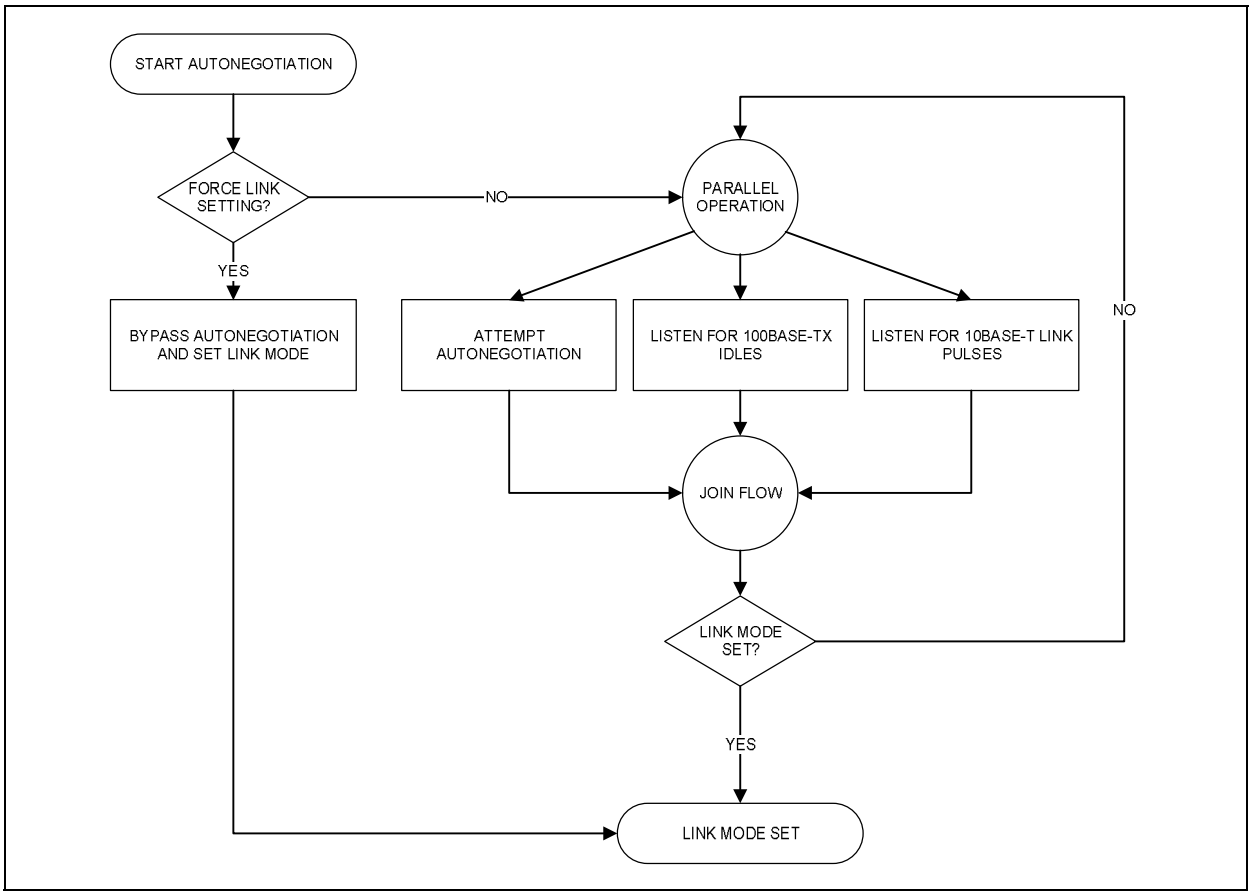

3.2 Quiet-Wire® Filtering

Quiet-Wire is a feature to enhance 100BASE-TX EMC performance by reducing both conducted and radiated emissions from the TXP/M signal pair. It can be used either to reduce absolute emissions, or to enable replacement of shielded cable with unshielded cable, all while maintaining interoperability with standard 100BASE-TX devices.

Quiet-Wire filtering is implemented internally, with no additional external components required. It is enabled or disabled at power-up and reset by a strapping option on the RXER pin. Once the KSZ8061 is powered up, Quiet-Wire can be disabled by writing to register 16h, bit [12].

The default setting for Quiet-Wire reduces emissions primarily above 60 MHz, with less reduction at lower frequencies. Several dB of reduction is possible. Signal attenuation is approximately equivalent to increasing the cable length by 10 to 20 meters, thus reducing cable reach by that amount. For applications needing more modest improvement in emissions, the level of filtering can be reduced by writing a series of registers.

3.3 Fast Link-Up

Link-up time is normally determined by the time it takes to complete auto-negotiation. Additional time may be added by the auto MDI/MDI-X feature. The total link-up time from power-up or cable-connect is typically a second or more.

Fast Link-up mode significantly reduces 100BASE-TX link-up time by disabling both auto-negotiation and auto MDI/MDI-X, and fixing the TX and RX channels. This is done via the CONFIG[2:0] and AUTONEG strapping options. Because these are strapping options, fast link-up is available immediately upon power-up. Fast link-up is available only for 100BASE-TX link speed. To force the link speed to 10BASE-TX requires a register write.

Fast link-up is intended for specialized applications where both link partners are known in advance. The link must also be known so that the fixed transmit channel of one device connects to the fixed receive channel of the other device, and vice versa.

If a device in Fast Link-up mode is connected to a normal device (auto-negotiate and auto-MDI/MDI-X), there will be no problems linking, but the speed advantage of fast link-up will not be realized.

3.4 Internal and External RX Termination

By default, the RX differential pair is internally terminated. This minimizes the board component count by eliminating all components between the KSZ8061MN and the magnetics (transformer and common mode choke). The KSZ8061MN has the option to turn off the internal termination and allow the use of external termination. External termination does increase the external component count, but these external components can be of tighter tolerances than the internal termination resistors. Enabling or disabling of internal RX termination is controlled by register 14h, bit [2].

If external termination is used in place of the internal termination, it should consist of a 100Ω resistor between RXP and RXM, with a 0.1 µF or 1 µF capacitor at the midpoint.

3.5 MII Interface

The Media Independent Interface (MII) is compliant with the IEEE 802.3 Specification. It provides a common interface between MII PHYs and MACs, and has the following key characteristics:

- KSZ8061MNG (48-pin package) has full MII:
  - Pin count is 16 pins (7 pins for data transmission, 7 pins for data reception, and 2 pins for carrier and collision indication).
  - 10-Mbps and 100-Mbps data rates are supported at both half and full duplex.
  - Data transmission and reception are independent and belong to separate signal groups.
  - Transmit data and receive data are each 4-bit wide, a nibble.
- KSZ8061MNX (32-pin package) has MII-Lite:
  - Pin count is 15 pins (no COL signal).
  - Full duplex only; half duplex is not supported.

3.5.1 MII SIGNAL DEFINITION

Table 3-1 describes the MII signals. Refer to Clause 22 of the IEEE 802.3 Specification for detailed information.

TABLE 3-1: MII SIGNAL

MII Signal Name	Direction (KSZ8061MN Signal)	Direction (with respect to MAC device)	Description
TXC	Output	Input	Transmit Clock (2.5 MHz for 10 Mbps; 25 MHz for 100 Mbps)
TXEN	Input	Output	Transmit Enable
TXD[3:0]	Input	Output	Transmit Data [3:0]
TXER	Input	Output	Transmit Error (not implemented)
RXC	Output	Input	Receive Clock (2.5 MHz for 10 Mbps; 25 MHz for 100 Mbps)
RXDV	Output	Input	Receive Data Valid
RXD[3:0]	Output	Input	Receive Data [3:0]
RXER	Output	Input or (not required)	Receive Error
CRS	Output	Input	Carrier Sense
COL	Output	Input	Collision Detection (KSZ8061MNG only)

3.5.1.1 Transmit Clock (TXC)

TXC is sourced by the PHY. It is a continuous clock that provides the timing reference for TXEN and TXD[3:0]. When the PHY links at 10 Mbps, TXC is 2.5 MHz. When the PHY links at 100 Mbps, TXC is 25 MHz.

3.5.1.2 Transmit Enable (TXEN)

TXEN indicates the MAC is presenting nibbles on TXD[3:0] for transmission. It is asserted synchronously with the first nibble of the preamble and remains asserted while all nibbles to be transmitted are presented on the MII, and is negated prior to the first TXC following the final nibble of a frame. TXEN transitions synchronously with respect to TXC.

© 2016-2019 Microchip Technology Inc.

3.5.1.3 Transmit Error (TXER)

The TXER symbol error function for the transmitted frame onto the line is not implemented in this device.

3.5.1.4 Transmit Data [3:0] (TXD[3:0])

When TXEN is asserted, TXD[3:0] are the data nibbles accepted by the PHY for transmission. TXD[3:0] is 00 to indicate idle when TXEN is deasserted. TXD[3:0] transitions synchronously with respect to TXC.

3.5.1.5 Receive Clock (RXC)

RXC provides the timing reference for RXDV, RXD[3:0], and RXER.

- In 10-Mbps mode, RXC is recovered from the line while carrier is active. RXC is derived from the PHY's reference clock when the line is idle, or the link is down.
- In 100-Mbps mode, RXC is continuously recovered from the line. If the link is down, RXC is derived from the PHY's reference clock.

When the PHY links at 10 Mbps, RXC is 2.5 MHz. When the PHY links at 100 Mbps, RXC is 25 MHz.

3.5.1.6 Receive Data Valid (RXDV)

RXDV is driven by the PHY to indicate that the PHY is presenting recovered and decoded nibbles on RXD[3:0].

- In 10-Mbps mode, RXDV is asserted with the first nibble of the SFD (Start of Frame Delimiter), 5Dh, and remains asserted until the end of the frame.
- In 100-Mbps mode, RXDV is asserted from the first nibble of the preamble to the last nibble of the frame.

RXDV transitions synchronously with respect to RXC.

3.5.1.7 Receive Data[3:0] (RXD[3:0])

RXD[3:0] transitions synchronously with respect to RXC. For each clock period in which RXDV is asserted, RXD[3:0] transfers a nibble of recovered data from the PHY.

3.5.1.8 Receive Error (RXER)

RXER is asserted for one or more RXC periods to indicate that a Symbol Error (for example, a coding error that a PHY is capable of detecting, and that may otherwise be undetectable by the MAC sub-layer) was detected somewhere in the frame presently being transferred from the PHY. RXER transitions synchronously with respect to RXC.

3.5.1.9 Carrier Sense (CRS)

CRS is asserted and deasserted as follows:

- In 10-Mbps mode, CRS assertion is based on the reception of valid preambles. CRS deassertion is based upon the reception of an end-of-frame (EOF) marker.
- In 100-Mbps mode, CRS is asserted when a start-of-stream delimiter or /J/K symbol pair is detected. CRS is deasserted when an end-of-stream delimiter or /T/R symbol pair is detected. Additionally, the PMA layer deasserts CRS if IDLE symbols are received without /T/R.

3.5.1.10 Carrier Sense (COL)

COL is asserted in half-duplex mode whenever the transmitter and receiver are simultaneously active on the line. This informs the MAC that a collision has occurred during its transmission to the PHY. COL is supported only in the 48-pin package option. Therefore, the 32-pin package option does not support half duplex. When interfacing the 32-pin device to a MAC with a COL input, that input should be pulled low.

3.5.2 MII SIGNAL DIAGRAM

The KSZ8061MN MII pin connections to the MAC are shown in Figure 3-2.

FIGURE 3-2: KSZ8061MN MII INTERFACE

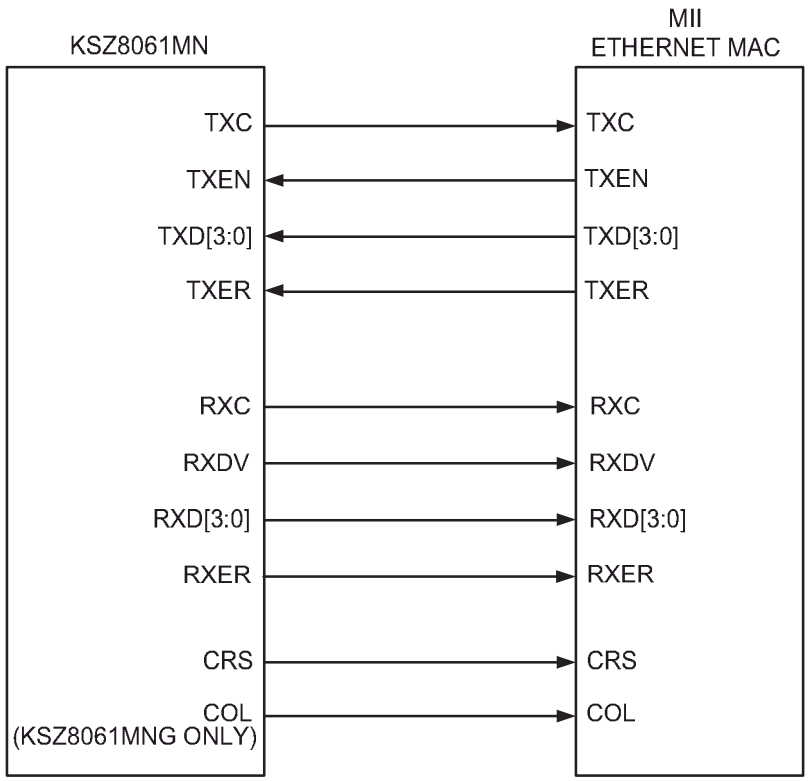

© 2016-2019 Microchip Technology Inc.

3.6 Back-to-Back Mode – 100 Mbps Repeater

Two KSZ8061MN devices can be connected back-to-back to form a 100BASE-TX to 100BASE-TX repeater. For testing purposes, it can also be used to loopback data on the MII bus by physically connecting the MII receive bus to the MII transmit bus.

FIGURE 3-3: KSZ8061MN TO KSZ8061MN BACK-TO-BACK REPEATER

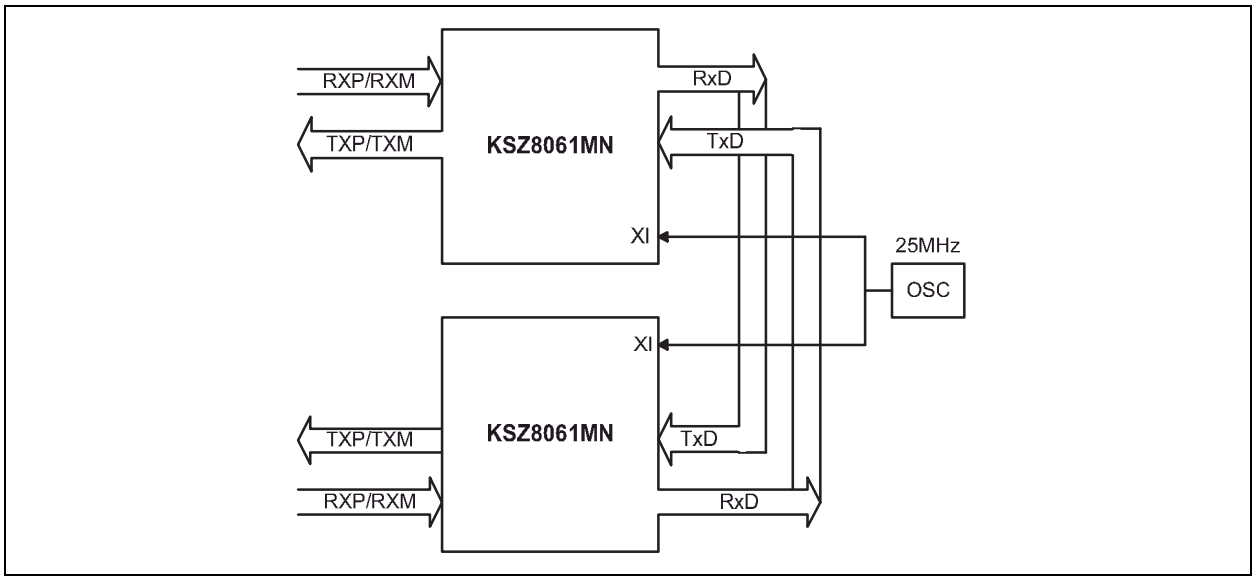

FIGURE 3-4: KSZ8061MN BACK-TO-BACK FOR MII BUS LOOPBACK

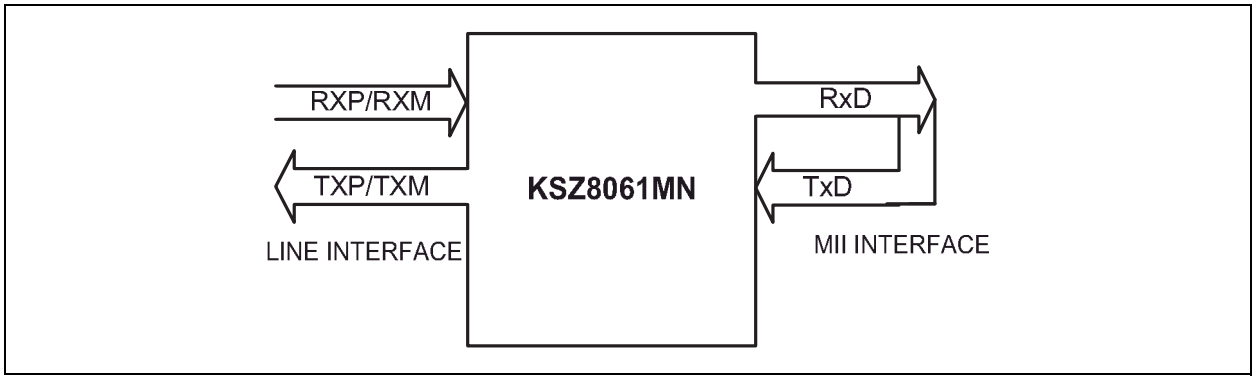

3.6.1 MII BACK-TO-BACK MODE

In MII Back-to-Back mode, a KSZ8061MN interfaces with another KSZ8061MN to provide a complete 100-Mbps repeater solution. RXC and TXC are not connected; they are both outputs.

The KSZ8061MN devices are configured to MII Back-to-Back mode after power-up or reset with the following:

- Strapping pin CONFIG[2:0] set to ‘110’
- A common 25-MHz reference clock connected to XI of both KSZ8061MN devices
- MII signals connected as shown in Table 3-2

TABLE 3-2: MII SIGNAL CONNECTION FOR MII BACK-TO-BACK MODE

KSZ8061MN (100BASE-TX) [Device 1]		KSZ8061MN (100BASE-TX) [Device 1 or 2]	
Pin Name	**Pin Type**	**Pin Name**	**Pin Type**
RXDV	Output	TXEN	Input
RXD3	Output	TXD3	Input
RXD2	Output	TXD2	Input
RXD1	Output	TXD1	Input
RXD0	Output	TXD0	Input
TXEN	Input	RXDV	Output
TXD3	Input	RXD3	Output
TXD2	Input	RXD2	Output
TXD1	Input	RXD1	Output
TXD0	Input	RXD0	Output

3.6.2 BACK-TO-BACK MODE AND 10BASE-T

If Back-to-Back mode is used and the line interface is operating at 10BASE-T, it is necessary to also set register 18h bit [6].

3.7 MII Management (MIIM) Interface

The KSZ8061MN supports the IEEE 802.3 MII Management Interface, also known as the Management Data Input/Output (MDIO) Interface. This interface enables an upper-layer device, like a MAC processor, to monitor and control the state of the KSZ8061MN. An external device with MIIM capability is used to read the PHY status, configure the PHY settings, or both. Further details on the MIIM interface can be found in Clause 22.2.4 of the IEEE 802.3 Specification.

The MIIM interface consists of the following:

- A physical connection that incorporates the clock line (MDC) and the data line (MDIO).
- A specific protocol that operates across the aforementioned physical connection that allows the external controller to communicate with one or more PHY devices.
- A set of 16-bit MDIO registers. Supported registers [0:8] are standard registers, and their functions are defined per the IEEE 802.3 Specification. The additional registers are provided for expanded functionality. See the Register Map section for details.

The KSZ8061MN supports unique PHY addresses 1 to 7, and broadcast PHY address 0. The broadcast address is defined per the IEEE 802.3 Specification, and can be used to write to multiple KSZ8061MN devices simultaneously.

The PHYAD[2:0] strapping pins are used to assign a unique PHY address between 0 and 7 to each KSZ8061MN device.

Table 3-3 shows the MII Management frame format.

TABLE 3-3: MII MANAGEMENT FRAME FORMAT

	Preamble	Start of Frame	Read/Write OP Code	PHY Address Bits [4:0]	REG Address Bits [4:0]	TA	Data Bits [15:0]	Idle
Read	32 1's	01	10	00AAA	RRRRR	Z0	DDDDDDDD_DDDDDDDD	Z
Write	32 1's	01	10	00AAA	RRRRR	10	DDDDDDDD_DDDDDDDD	Z

© 2016-2019 Microchip Technology Inc.

3.8 LED Output Pins

The LED0 and LED1 pins indicate line status and are intended for driving LEDs. Bits [5:4] in register 1Fh allow the definition of these pins to be changed. The KSZ8061MNX and KSZ8061MNG have different default settings.

On the KSZ8061MNX, the default function for LED0 is Link Status. The KSZ8061MNX does not have an LED1 pin.

On the KSZ8061MNG, the default function for LED0 is Link/Activity and LED1 indicates Link Speed.

- Link Status: The LED indicates that the serial link is up.
- Link/Activity: When the link is up but there is no traffic, the LED is on. When packets are being received or transmitted, the LED blinks.
- Activity: The LED blinks when packets are received or transmitted. It is off when there is no activity.
- Speed: When the link is up, the LED is on to indicate a 100BASE-TX link, and is off to indicate a 10BASE-T link.

3.9 Interrupt (INTRP)

INTRP is an interrupt output signal that may be used to inform the external controller that there has been a status update to the KSZ8061MN PHY register. This eliminates the need for the processor to poll the PHY for status changes such as link up or down.

Register 1Bh, bits [15:8] are the interrupt control bits to enable and disable the conditions for asserting the INTRP signal. Register 1Bh, bits [7:0] are the interrupt status bits to indicate which interrupt conditions have occurred. The interrupt status bits are cleared after reading register 1Bh.

Register 1Fh, bit [9] sets the interrupt level to active high or active low. The default is active low.

3.10 HP Auto MDI/MDI-X

HP Auto MDI/MDI-X configuration eliminates the confusion of whether to use a straight cable or a crossover cable between the KSZ8061MN and its link partner. This feature allows the KSZ8061MN to use either type of cable to connect with a link partner that is in either MDI or MDI-X mode. The auto-sense function detects transmit and receive pairs from the link partner and then assigns transmit and receive pairs of the KSZ8061MN accordingly.

Auto MDI/MDI-X is initially either enabled or disabled at a hardware reset by strapping the hardware pin (CONFIG[2:0]). Afterwards, it can be enabled or disabled by register 1Fh, bit [13]. When Auto MDI/MDI-X is disabled, serial data is normally transmitted on the pin pair TXP/TXM, and data is received on RXP/RXM. However, this may be reversed by writing to register 1Fh, bit [14].

An isolation transformer with symmetrical transmit and receive data paths is recommended to support Auto MDI/MDI-X.

Table 3-4 illustrates how the IEEE 802.3 Standard defines MDI and MDI-X.

TABLE 3-4: MDI/MDI-X PIN DEFINITION

MDI		MDI-X	
RJ-45 Pin	**Signal**	**RJ-45 Pin**	**Signal**
1	TX+	1	RX+
2	TX-	2	RX-
3	RX+	3	TX+
6	RX-	6	TX-

3.10.1 STRAIGHT CABLE

A straight cable connects an MDI device to an MDI-X device, or an MDI-X device to an MDI device. Table 3-5 depicts a typical straight cable connection between a NIC card (MDI device) and a switch, or hub (MDI-X device).

FIGURE 3-5: TYPICAL STRAIGHT CABLE CONNECTION

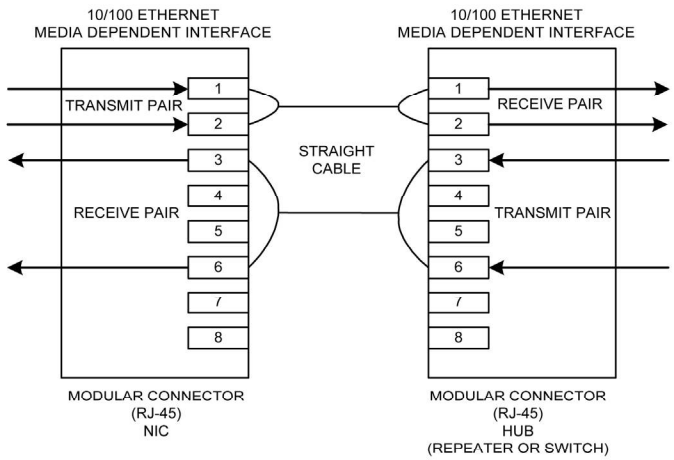

3.10.2 CROSSOVER CABLE

A crossover cable connects an MDI device to another MDI device, or an MDI-X device to another MDI-X device. Figure 3-6 depicts a typical crossover cable connection between two switches or hubs (two MDI-X devices).

FIGURE 3-6: TYPICAL CROSSOVER CABLE CONNECTION

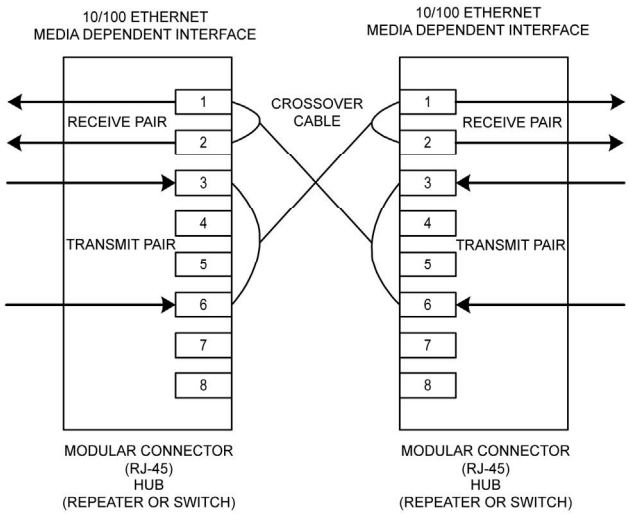

3.11 Loopback Modes

The KSZ8061MN supports the following loopback operations to verify analog and/or digital data paths.

- Local (Digital) Loopback
- Remote (Analog) Loopback

3.11.1 LOCAL (DIGITAL) LOOPBACK MODE

This loopback mode is a diagnostic mode for checking the MII transmit and receive data paths between KSZ8061MN and external MAC, and is supported for both speeds (10/100 Mbps) at full-duplex.

© 2016-2019 Microchip Technology Inc.

The loopback data path is shown in Figure 3-7.

1. MII MAC transmits frames to KSZ8061MN.
2. Frames are wrapped around inside KSZ8061MN.
3. KSZ8061MN transmits frames back to MII MAC.

FIGURE 3-7: LOCAL (DIGITAL) LOOPBACK

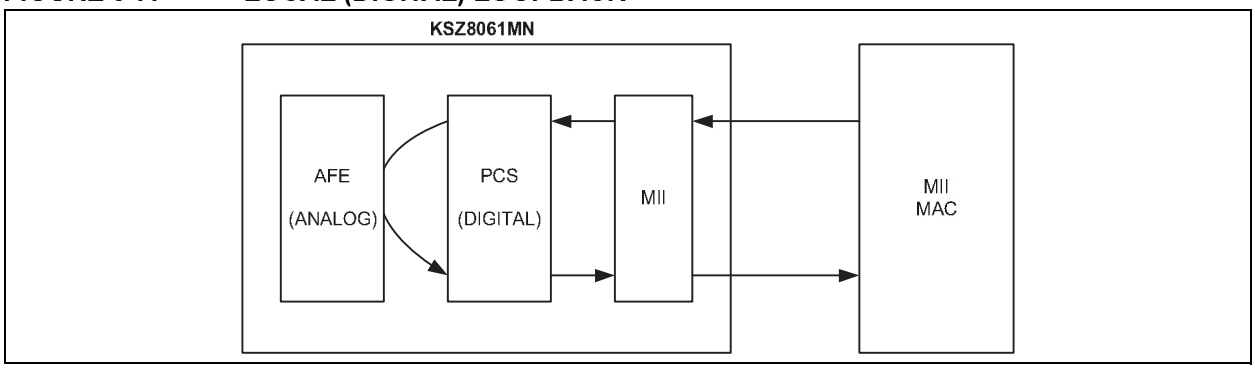

The following programming steps and register settings are used for Local Loopback mode.

For 10/100 Mbps loopback:

1. Set Register 0h,
   - Bit [14] = 1 // Enable Local Loopback mode
   - Bit [13] = 0/1 // Select 10 Mbps/100 Mbps speed
   - Bit [12] = 0 // Disable Auto-Negotiation
   - Bit [8] = 1 // Select full-duplex mode
2. Set Register 1Ch,
   - Bit [5] = 1

3.11.2 REMOTE (ANALOG) LOOPBACK

This loopback mode checks the line (differential pairs, transformer, RJ-45 connector, Ethernet cable) transmit and receive data paths between KSZ8061MN and its link partner, and is supported for 100BASE-TX full-duplex mode only.

The loopback data path is shown in Figure 3-8.

1. Fast Ethernet (100BASE-TX) PHY Link Partner transmits frames to KSZ8061MN.
2. Frames are wrapped around inside KSZ8061MN.
3. KSZ8061MN transmits frames back to Fast Ethernet (100BASE-TX) PHY Link Partner.

FIGURE 3-8: REMOTE (ANALOG) LOOPBACK

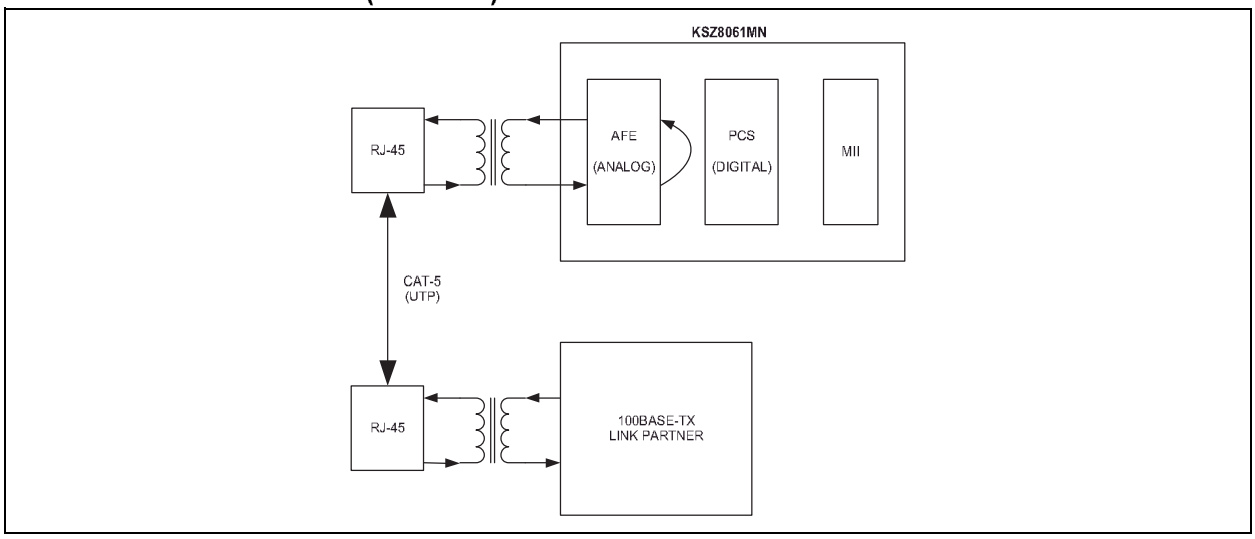

The following programming steps and register settings are used for Remote Loopback mode.

1. Set Register 0h,
   - Bit [13] = 1 // Select 100 Mbps speed
   - Bit [12] = 0 // Disable Auto-Negotiation
   - Bit [8] = 1 // Select full-duplex mode

Or simply auto-negotiate and link up at 100BASE-TX full-duplex mode with link partner.

2. Set Register 1Fh,
   - Bit [2] = 1 // Enable Remote Loopback mode

3.12 LinkMD® Cable Diagnostics

The LinkMD® function utilizes time domain reflectometry (TDR) to analyze the cabling plant for common cabling problems, such as open circuits, short circuits, and impedance mismatches.

LinkMD works by sending a pulse of known amplitude and duration down the MDI or MDI-X pair, and then analyzing the shape of the reflected signal to determine the type of fault. The time duration for the reflected signal to return provides the approximate distance to the cabling fault. The LinkMD function processes this TDR information and presents it as a numerical value that can be translated to a cable distance.

LinkMD is initiated by accessing the LinkMD Control/Status Register (register 1Dh) and the PHY Control 2 Register (register 1Fh). The latter register is used to disable auto MDI/MDI-X and to select either MDI or MDI-X as the cable differential pair for testing.

A two-step process is used to analyze the cable. The first step uses a small pulse (for short cables), while the second step uses a larger pulse (for long cables). The steps are shown here:

For short cables:

1. Write MMD address 1Bh, register 0, bits [7:4] = 0x2. Note that this is the power-up default value.
2. Write register 13h, bit [15] = 0. Note that this is the power-up default value.
3. Write register 1Fh. Disable auto MDI/MDI-X in bit [13], and select either MDI or MDI-X in bit [14] to specify the twisted pair to test.
4. Write register 1Dh bit [15] = 1 to initiate the LinkMD test.
5. Read register 1Dh to determine the result of the first step. Bit [15] = 0 indicates that the test is complete. After that, the result is read in bits [14:12]. Remember the result.

For long cables:

1. Write MMD address 1Bh, register 0, bits [7:4] = 0x7.
2. Write register 13h, bit [15] = 1.
3. Write register 1Dh bit [15] = 1 to initiate the LinkMD test.
4. Read register 1Dh to determine the result of the first step. Bit [15] = 0 indicates that the test is complete. After that, the result is read in bits [14:12].

Register 1Dh bits [14:13] indicate the basic result of the test. When an Open or Short condition is reported, the distance to the open or short is determined from the distance value read from register bits [8:0].

Distance (m) = (count value * 4(ns)/4.8(ns/m)) / 2

When Normal condition is reported, the distance value is not relevant.

If either test reveals a short, then there is a short. If either test reveals an open, then there is an open. If both tests indicate normal, then the cable is normal.

3.13 LinkMD®+ Enhanced Diagnostics: Receive Signal Quality Indicator

The KSZ8061MN provides a receive Signal Quality Indicator (SQI) feature that indicates the relative quality of the 100BASE-TX receive signal. It approximates a signal-to-noise ratio, and is affected by cable length, cable quality, and environmental EM noise.

The raw SQI value is available for reading at any time from indirect register: MMD 1Ch, register ACh, bits [14:8]. A lower value indicates better signal quality, while a higher value indicates worse signal quality. Even in a stable configuration in a low-noise environment, the value read from this register may vary. The value should therefore be averaged by taking multiple readings. The update interval of the SQI register is 2 µs, so measurements taken more frequently than 2 µs are

© 2016-2019 Microchip Technology Inc.

redundant. In a quiet environment, six to ten readings are suggested for averaging. In a noisy environment, individual readings are unreliable, so a minimum of thirty readings are suggested for averaging. The SQI circuit does not include any hysteresis.

Table 3-5 lists typical SQI values for various CAT5 cable lengths when linked to a typical 100BASE-TX device in a quiet environment. In a noisy environment or during immunity testing, the SQI value increases.

TABLE 3-5: TYPICAL SQI VALUES

CAT5 Cable Length	Typical SQI Value (MMD 1Ch, Register ACh, Bits [14:8]
10m	2
30m	2
50m	3
80m	3
100m	4
130m	5

3.14 NAND Tree Support

The KSZ8061MN provides parametric NAND tree support for fault detection between chip I/Os and board. The NAND tree is a chain of nested NAND gates in which each KSZ8061MN digital I/O (NAND tree input) pin is an input to one NAND gate along the chain. At the end of the chain, the CRS pin provides the output for the next NAND gates.

The NAND tree test process includes:

- Enabling NAND tree mode
- Pulling all NAND tree input pins high
- Driving low each NAND tree input pin sequentially per the NAND tree pin order
- Checking the NAND tree output to ensure there is a toggle high-to-low or low-to-high for each NAND tree input driven low

Table 3-6 and Table 3-7 list the NAND tree pin order.

TABLE 3-6: KSZ8061MNX NAND TREE TEST PIN ORDER

Pin Number	Pin Name	NAND Tree Description
10	MDIO	Input
11	MDC	Input
12	RXER	Input
13	RXDV	Input
14	RXD3	Input
16	RXD2	Input
17	RXD1	Input
18	RXD0	Input
19	RXC	Input
20	TXC	Input
21	TXEN	Input
22	TXD0	Input
23	TXD1	Input
24	LED0	Input
25	TXD2	Input
26	TXD3	Input
29	INTRP	Input
27	CRS	Output

© 2016-2019 Microchip Technology Inc.

TABLE 3-7: KSZ8061MNG NAND TREE TEST PIN ORDER

Pin Number	Pin Name	NAND Tree Description
15	COL	Input
16	MDIO	Input
17	MDC	Input
18	RXER	Input
19	RXDV	Input
20	RXD3	Input
23	RXD2	Input
24	RXD1	Input
25	RXD0	Input
26	RXC	Input
29	TXC	Input
30	TXEN	Input
31	TXD0	Input
32	TXD1	Input
34	TXER	Input
35	TXD2	Input
37	TXD3	Input
39	LED0	Input
40	LED1	Input
44	INTRP	Input
38	CRS	Output

3.14.1 NAND TREE I/O TESTING

The following procedure can be used to check for faults on the KSZ8061MN digital I/O pin connections to the board:

1. Enable NAND tree mode by INTRP pin strapping option.
2. Use board logic to drive all KSZ8061MN NAND tree input pins high.
3. Use board logic to drive each NAND tree input pin, per KSZ8061MN NAND tree pin order, as follows:
   a) Toggle the first pin (MDIO) from high to low, and verify the CRS pin switch from high to low to indicate that the first pin is connected properly.
   b) Leave the first pin (MDIO) low.
   c) Toggle the second pin (MDC) from high to low, and verify the CRS pin switch from low to high to indicate that the second pin is connected properly.
   d) Leave the first pin (MDIO) and the second pin (MDC) low.
   e) Toggle the third pin (RXD3) from high to low, and verify the CRS pin switch from high to low to indicate that the third pin is connected properly.
   f) Continue with this sequence until all KSZ8061MN NAND tree input pins have been toggled.

Each KSZ8061MN NAND tree input pin must cause the CRS output pin to toggle high-to-low or low-to-high to indicate a good connection. If the CRS pin fails to toggle when the KSZ8061MN input pin toggles from high to low, the input pin has a fault.

© 2016-2019 Microchip Technology Inc.

3.15 Power Management

The KSZ8061MN offers the following power management modes, which are enabled and disabled by register control.

3.15.1 POWER SAVING MODE

Power Saving mode is used to reduce the transceiver power consumption when the cable is unplugged. This mode does not interfere with normal device operation. It is enabled by writing a one to register 1Fh, bit [10], and is in effect when auto-negotiation mode is enabled and cable is disconnected (no link).

In this mode, the KSZ8061MN shuts down all transceiver blocks except for the transmitter, energy detect, and PLL circuits. By default, Power Saving mode is disabled after power-up.

3.15.2 ENERGY DETECT POWER DOWN MODE

Energy Detect Power Down (EDPD) mode is used to further reduce the transceiver power consumption when the cable is unplugged, relative to Power Saving mode. This mode does not interfere with normal device operation. It is enabled by writing a zero to register 18h, bit [11], and is in effect when auto-negotiation mode is enabled and cable is disconnected (no link).

EDPD mode can be optionally enhanced with a PLL Off feature, which turns off all KSZ8061MN transceiver blocks, except for transmitter and energy detect circuits. PLL Off is set by writing a one to register 10h, bit [4].

Further power reduction is achieved by extending the time interval in between transmissions of link pulses while in this mode. The periodic transmission of link pulses is needed to ensure two link partners in the same low power state and with auto MDI/MDI-X disabled can wake up when the cable is connected between them. By default, EDPD mode is disabled after power-up.

3.15.3 POWER DOWN MODE

Power Down mode is used to power down the KSZ8061MN when it is not in use after power-up. It is enabled by writing a one to register 0h, bit [11].

In this mode, the KSZ8061MN disables all internal functions except the MII management interface. The KSZ8061MN exits (disables) Power Down mode after register 0h, bit [11] is set back to zero.

3.15.4 SLOW OSCILLATOR MODE

Slow Oscillator mode is used to disconnect the input reference crystal/clock on XI (pin 1) and select the on-chip slow oscillator when the KSZ8061MN is not in use after power-up. It is enabled by writing a one to register 11h, bit [6].

Slow Oscillator mode works in conjunction with Power Down mode to put the KSZ8061MN into a lower power state with all internal functions disabled, except for the MII management interface. To properly exit this mode and return to normal PHY operation, use the following programming sequence:

1. Disable Slow Oscillator mode by writing a zero to register 11h, bit [6].
2. Disable Power Down mode by writing a zero to register 0h, bit [11].
3. Initiate software reset by writing a one to register 0h, bit [15].

3.15.5 ULTRA-DEEP SLEEP MODE

Ultra-Deep Sleep mode is used to achieve the lowest possible power consumption while retaining the ability to detect activity on the Tx/Rx cable pairs, and is intended for achieving negligible battery drain during long periods of inactivity. It is controlled by several register bits. Ultra-Deep Sleep mode may be entered by writing to a register, or it may be initiated automatically when signal detect (SIGDET) is deasserted. Details are given in the Signal Detect (SIGDET) and Ultra-Deep Sleep mode section.

In Ultra-Deep Sleep mode, the KSZ8061MN disables all internal functions and I/Os except for the ultra-low power signal detect circuit and the signal detect pin (SIGDET), which are powered by VDDIO. For the lowest power consumption, the 1.2V supply (VDDL and AVDDL) may be turned off externally. A hardware reset is required to exit Ultra-Deep Sleep mode.

3.15.6 NON-VOLATILE REGISTERS

Most of the logic circuitry of the KSZ8061MN, including the status and control registers, is powered by the 1.2V supply. When the 1.2V supply is turned off in Ultra-Deep Sleep mode, the content of the registers is lost. Because of the importance of register 14h and bit [0] of register 13h, which control the various power modes, these bits are duplicated in a logic block powered by the 3.3V supply. These register bits are therefore “non-volatile” while in Ultra-Deep Sleep mode.

© 2016-2019 Microchip Technology Inc.

To access the non-volatile (3.3V) registers, bit [4] of register 14h must first be set. Otherwise, writes to these registers modify only the volatile versions of these registers and not the non-volatile versions.

3.16 Signal Detect (SIGDET) and Ultra-Deep Sleep Mode

SIGDET is an output signal that may be used for power reduction, either by directly turning off selected power or by signaling to a host controller when no signal is detected on the line interface. It is asserted when sufficient energy is detected on either of the differential pairs, and is deasserted when cable energy is not detected. The signal detection circuit consumes almost no power from the VDDIO supply, and does not use the 1.2V supply at all.

Ultra-Deep Sleep mode may be entered either automatically in unison with the Signal Detect signal (automatic method), or manually by setting a register bit (CPU control method).

The signal detect feature and Ultra-Deep Sleep mode are controlled via multiple bits in register 14h:

- Register 14h, bit [6] Ultra-Deep Sleep method: either automatic or CPU control
- Register 14h, bit [5] Manually enter Ultra-Deep Sleep mode when CPU control method is selected
- Register 14h, bit [4] Enable R/W access to non-volatile versions of register 14h and bits [9:8] and [1:0] of register 13h. Set this bit when bit [3] is set.
- Register 14h, bit [3] Enable Ultra-Deep Sleep mode and SIGDET
- Register 14h, bit [1] Extend timing for SIGDET deassertion and entry into Ultra-Deep Sleep mode
- Register 14h, bit [0] SIGDET output polarity

3.16.1 CPU CONTROL METHOD (MIIM INTERFACE)

In the CPU control method, the KSZ8061MN drives the SIGDET signal to the CPU. SIGDET defaults to force high, to not interfere with PHY initialization by the CPU. At power-on, the KSZ8061MN drives SIGDET high, without consideration of cable energy level. During initialization, the CPU writes data 0x0058 to register 14h.

- Bit [4] enables access to the non-volatile copy of register 14h.
- Enable Ultra-Deep Sleep mode and SIGDET by setting register 14h, bit [3].
- Automatic Ultra-Deep Sleep functionality is disabled by setting register 14h, bit [6].

SIGDET is now enabled and changes state as the cable energy changes. Typically, in response to the deassertion of SIGDET, the CPU puts KSZ8061MN into Ultra-Deep Sleep mode by setting register 14h, bit [5]. To further reduce power, the CPU may disable the 1.2V supply to the KSZ8061MN. The KSZ8061MN asserts SIGDET when energy is detected on the cable. To activate the KSZ8061MN, the CPU enables the 1.2V supply and asserts hardware reset (RESET#) to the KSZ8061MN. Because the KSZ8061MN has been completely reset, the registers must also be re-initialized.

Alternatively, it is possible to maintain register access during Ultra-Deep Sleep mode by preserving the 1.2V power supply and setting register 13h, bit [0] to enable Slow Oscillator mode. Ultra-Deep Sleep mode can then be exited by writing to register 14h. The 1.2V supply results in increased power consumption.

3.16.2 AUTOMATIC ULTRA-DEEP SLEEP METHOD

The board may be designed such that the KSZ8061MN SIGDET signal enables the 1.2V power supply to KSZ8061MN. At power-on, the KSZ8061MN drives SIGDET high, without consideration of cable energy level. During initialization, CPU writes data 0x001A or 0x0018 to register 14h.

- Bit [4] enables access to the non-volatile copy of register 14h.
- Enable Ultra-Deep Sleep mode and SIGDET by setting register 14h, bit [3].
- Automatic Ultra-Deep Sleep functionality is enabled by clearing register 14h, bit [6].
- SIGDET timing bit [1] must be set unless the link partner is not using auto-negotiation, auto-MDI/MDI-X is disabled, and the link is at 100 Mbps.

When the KSZ8061MN detects signal loss, it automatically enters Ultra-Deep Sleep mode and deasserts SIGDET. SIGDET may be used to disable the 1.2V supply. When the KSZ8061MN detects a signal, it asserts SIGDET (which enables the 1.2V supply) and automatically wakes up. SIGDET may be used to wake up the CPU, which then re-initializes the KSZ8061MN.

Alternatively, a hardware reset (RESET#) brings the KSZ8061MN out of Ultra-Deep Sleep mode. Note that the contents of register 14h and bits [9:8] and [1:0] of register 13h are preserved during Ultra-Deep Sleep mode, but are lost during hardware reset.

© 2016-2019 Microchip Technology Inc.

3.17 Reference Circuit for Power and Ground Connections

The KSZ8061MNX and KSZ8061MNG require a minimum of two supply voltages. 1.2V is required for VDDL and AVDDL. 3.3V is required for VDDIO and AVDDH. Optionally, VDDIO may be operated at 2.5V or 1.8V.

FIGURE 3-9: KSZ8061MNX POWER AND GROUND CONNECTIONS

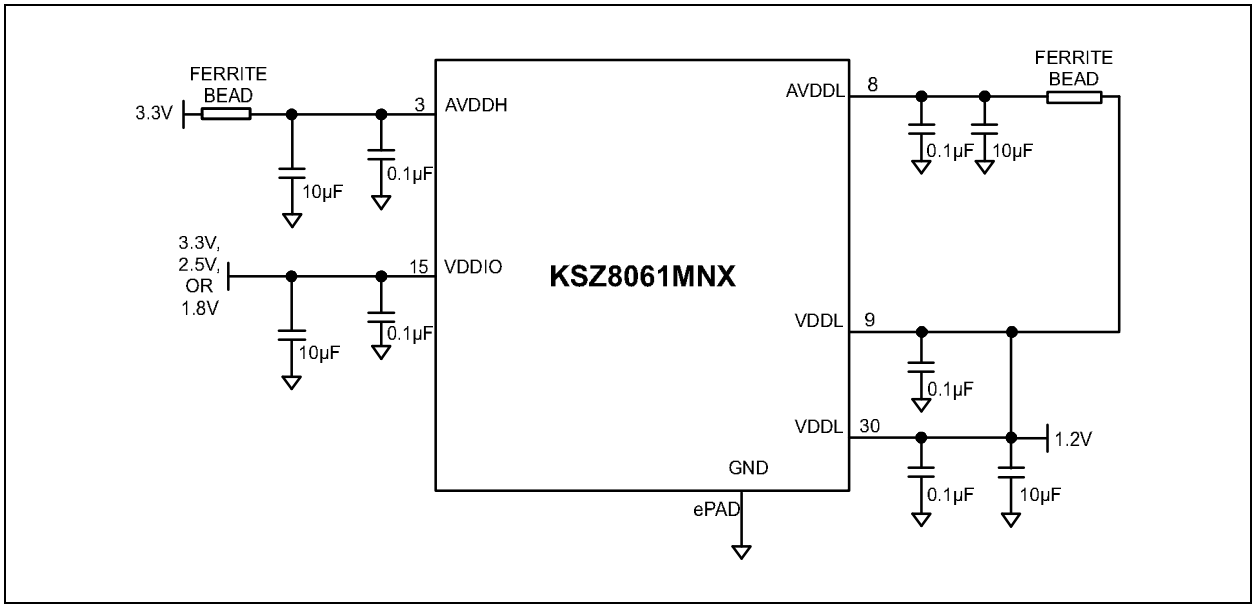

FIGURE 3-10: KSZ8061MNG POWER AND GROUND CONNECTIONS

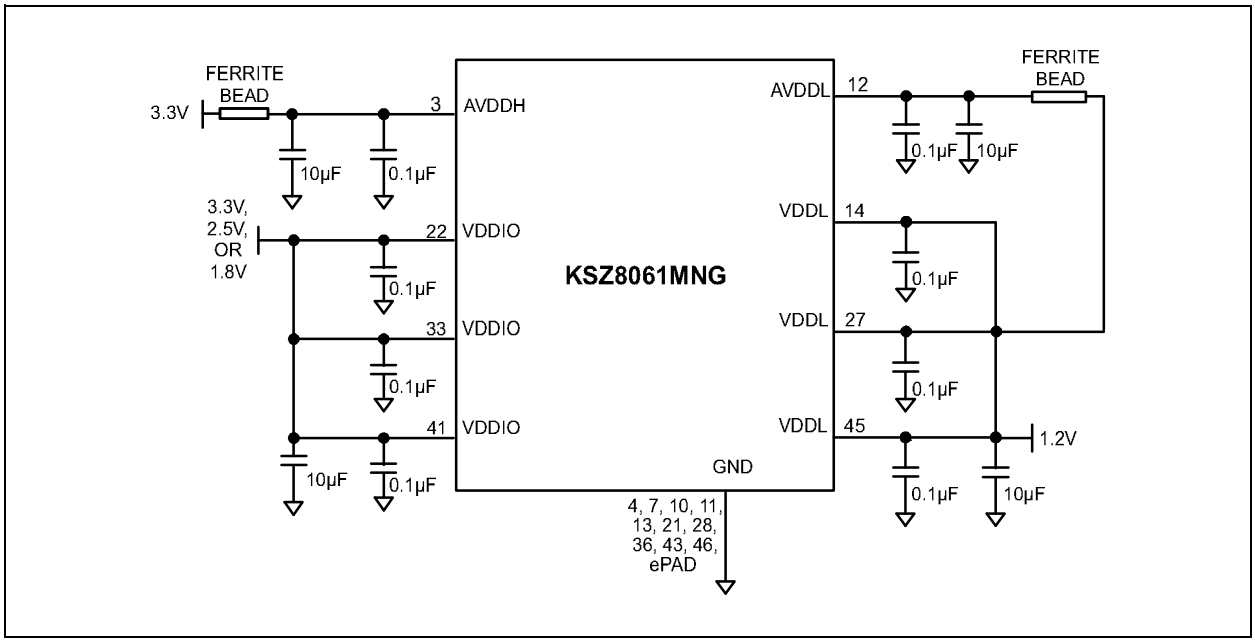

4.0 REGISTER DESCRIPTIONS

This chapter describes the various control and status registers (CSRs). All registers follow the IEEE 802.3 (clause 22.2.4) management register set. All functionality and bit definitions comply with these standards. The IEEE 802.3 specified register index (in decimal) is included with each register definition, allowing for addressing of these registers via the Serial Management Interface (SMI) protocol.

4.1 Register Map

The register space within the KSZ8061MN consists of two distinct areas:

- Standard registers // Direct register access
- MDIO Manageable device (MMD) registers // Indirect register access

TABLE 4-1: STANDARD REGISTERS

Register Number (hex)	Description
IEEE-Defined Registers	
0h	Basic Control
1h	Basic Status
2h	PHY Identifier 1
3h	PHY Identifier 2
4h	Auto-Negotiation Advertisement
5h	Auto-Negotiation Link Partner Ability
6h	Auto-Negotiation Expansion
7h	Auto-Negotiation Next Page
8h	Auto-Negotiation Link Partner Next Page Ability
9h - Ch	Reserved
Dh	MMD Access Control Register
Eh	MMD Access Address Data Register
Fh	Reserved
Vendor-Specific Registers	
10h	Digital Control
11h	AFE Control 0
12h	AFE Control 1
13h	AFE Control 2
14h	AFE Control 3
15h	RXER Counter
16h	Operation Mode
17h	Operation Mode Strap Status
18h	Expanded Control
19h - 1Ah	Reserved
1Bh	Interrupt Control/Status
1Ch	Function Control
1Dh	LinkMD® Control/Status
1Eh	PHY Control 1
1Fh	PHY Control 2

The KSZ8061MN supports the following MMD device addresses and their associated register addresses, which make up the indirect MMD registers.

© 2016-2019 Microchip Technology Inc.

TABLE 4-2: MMD REGISTERS

Device Address (hex)	Register Address (hex)	Description
7h	3Ch	Reserved
	3Dh	Reserved
1Bh	0h	AFED Control
1Ch	ACh	Signal Quality

4.2 Standard Registers

Standard registers provide direct read/write access to a 32-register address space, as defined in Clause 22 of the IEEE 802.3 standard. Within this address space, the first 16 registers (0h to Fh) are defined according to the IEEE Specification, while the remaining 16 registers (10h to 1Fh) are defined specific to the PHY vendor.

TABLE 4-3: STANDARD REGISTER DESCRIPTION

Address	Name	Description	Mode (Note 4-1)	Default
Register 0h - Basic Control				
0.15	Reset	1 = Software reset 0 = Normal operation This bit is self-cleared after a ‘1’ is written to it.	RW/SC	0
0.14	Loopback	1 = Loopback mode (MII TX to MII RX. Line side is disconnected.) 0 = Normal operation Loopback must be enabled both here and in register 1Ch.	RW	0
0.13	Speed Select	1 = 100 Mbps 0 = 10 Mbps This bit is ignored if auto-negotiation is enabled (register 0.12 = 1). At reset, this bit is set by strapping in pin 40 of the 48-pin device. (The 32-pin device has no strapping option for speed; this bit default is 1.) After reset, this bit may be overwritten.	RW	1
0.12	Auto-Negotiation Enable	1 = Enable auto-negotiation process 0 = Disable auto-negotiation process If enabled, auto-negotiation result overrides settings in register 0.13 and 0.8.	RW	Set by AUTONEG strapping pin. See Table 2-2 for details.
0.11	Power Down	1 = Power down mode 0 = Normal operation If software reset (register 0.15) is used to exit Power Down mode (register 0.11 = 1), two software reset writes (register 0.15 = 1) are required. First write clears Power Down mode; second write resets chip and re-latches the pin strapping pin values.	RW	0
0.10	Isolate	1 = Electrical isolation of PHY from MII 0 = Normal operation	RW	0
0.9	Restart Auto-Negotiation	1 = Restart auto-negotiation process 0 = Normal operation. This bit is self-cleared after a ‘1’ is written to it.	RW/SC	0

TABLE 4-3: STANDARD REGISTER DESCRIPTION (CONTINUED)

Address	Name	Description	Mode (Note 4-1)	Default
0.8	Duplex Mode	1 = Full-duplex 0 = Half-duplex At reset, the duplex mode is set by strapping in pin 25 of the 48-pin device. This bit value is the inverse of the strapping input. (The 32-pin device has no strapping option for duplex mode.) After reset, this bit may be overwritten.	RW	1
0.7	Collision Test	1 = Enable COL test 0 = Disable COL test Note: COL is not supported in the 32-pin package.	RW	0
0.6:0	Reserved	—	RO	000_0000
Register 1h - Basic Status				
1.15	100BASE-T4	1 = T4 capable 0 = Not T4 capable	RO	0
1.14	100BASE-TX Full-Duplex	1 = Capable of 100 Mbps full-duplex 0 = Not capable of 100 Mbps full-duplex	RO	1
1.13	100BASE-TX Half-Duplex	1 = Capable of 100 Mbps half-duplex 0 = Not capable of 100 Mbps half-duplex	RO	1
1.12	10BASE-T Full-Duplex	1 = Capable of 10 Mbps full-duplex 0 = Not capable of 10 Mbps full-duplex	RO	1
1.11	10BASE-T Half-Duplex	1 = Capable of 10 Mbps half-duplex 0 = Not capable of 10 Mbps half-duplex	RO	1
1.10:7	Reserved	—	RO	000_0
1.6	No Preamble	1 = Preamble suppression acceptable 0 = Normal preamble required	RW	1
1.5	Auto-Negotiation Complete	1 = Auto-negotiation process completed 0 = Auto-negotiation process not completed	RO	0
1.4	Remote Fault	1 = Remote fault 0 = No remote fault	RO/LH	0
1.3	Auto-Negotiation Ability	1 = Capable to perform auto-negotiation 0 = Not capable to perform auto-negotiation	RO	1
1.2	Link Status	1 = Link is up 0 = Link is down	RO/LL	0
1.1	Jabber Detect	1 = Jabber detected 0 = Jabber not detected (default is low)	RO/LH	0
1.0	Extended Capability	1 = Supports extended capabilities registers	RO	1
Register 2h - PHY Identifier 1				
2.15:0	PHY ID Number	Assigned to the 3rd through 18th bits of the Organizationally Unique Identifier (OUI). Kendin Communication's OUI is 0010A1 (hex)	RO	0022h
Register 3h - PHY Identifier 2				
3.15:10	PHY ID Number	Assigned to the 19th through 24th bits of the Organizationally Unique Identifier (OUI). Kendin Communication's OUI is 0010A1 (hex)	RO	0001_01
3.9:4	Model Number	Six bit manufacturer's model number	RO	01_0111

© 2016-2019 Microchip Technology Inc.

TABLE 4-3: STANDARD REGISTER DESCRIPTION (CONTINUED)

Address	Name	Description	Mode (Note 4-1)	Default
3.3:0	Revision Number	Four bit manufacturer's revision number	RO	Indicates silicon revision
Register 4h - Auto-Negotiation Advertisement				
4.15	Next Page	1 = Next page capable 0 = No next page capability	RW	1
4.14	Reserved	—	RO	0
4.13	Remote Fault	1 = Remote fault supported 0 = No remote fault	RW	0
4.12	Reserved	—	RO	0
4.11:10	Pause	[00] = No PAUSE [10] = Asymmetric PAUSE [01] = Symmetric PAUSE [11] = Asymmetric & Symmetric PAUSE	RW	00
4.9	100BASE-T4	1 = T4 capable 0 = No T4 capability	RO	0
4.8	100BASE-TX Full-Duplex	1 = 100 Mbps full-duplex capable 0 = No 100 Mbps full-duplex capability	RW	1
4.7	100BASE-TX Half-Duplex	1 = 100 Mbps half-duplex capable 0 = No 100 Mbps half-duplex capability	RW	1
4.6	10BASE-T Full-Duplex	1 = 10 Mbps full-duplex capable 0 = No 10 Mbps full-duplex capability	RW	1
4.5	10BASE-T Half-Duplex	1 = 10 Mbps half-duplex capable 0 = No 10 Mbps half-duplex capability	RW	1
4.4:0	Selector Field	[00001] = IEEE 802.3	RW	0_0001
Register 5h - Auto-Negotiation Link Partner Ability				
5.15	Next Page	1 = Next page capable 0 = No next page capability	RO	0
5.14	Acknowledge	1 = Link code word received from partner 0 = Link code word not yet received	RO	0
5.13	Remote Fault	1 = Remote fault detected 0 = No remote fault	RO	0
5.12	Reserved	—	RO	0
5.11:10	Pause	[00] = No PAUSE [10] = Asymmetric PAUSE [01] = Symmetric PAUSE [11] = Asymmetric & Symmetric PAUSE	RO	00
5.9	100BASE-T4	1 = T4 capable 0 = No T4 capability	RO	0
5.8	100BASE-TX Full-Duplex	1 = 100 Mbps full-duplex capable 0 = No 100 Mbps full-duplex capability	RO	0
5.7	100BASE-TX Half-Duplex	1 = 100 Mbps half-duplex capable 0 = No 100 Mbps half-duplex capability	RO	0
5.5	10BASE-T Full-Duplex	1 = 10 Mbps full-duplex capable 0 = No 10 Mbps full-duplex capability	RO	0
5.5	10BASE-T Half-Duplex	1 = 10 Mbps half-duplex capable 0 = No 10 Mbps half-duplex capability	RO	0
5.4:0	Selector Field	[00001] = IEEE 802.3	RO	0_0001

© 2016-2019 Microchip Technology Inc.

TABLE 4-3: STANDARD REGISTER DESCRIPTION (CONTINUED)

Address	Name	Description	Mode (Note 4-1)	Default
Register 6h - Auto-Negotiation Expansion				
6.15:5	Reserved	—	RO	0000_0000_000
6.4	Parallel Detection Fault	1 = Fault detected by parallel detection 0 = No fault detected by parallel detection	RO/LH	0
6.3	Link Partner Next Page Able	1 = Link partner has next page capability 0 = Link partner does not have next page capability	RO	0
6.2	Next Page Able	1 = Local device has next page capability 0 = Local device does not have next page capability	RO	1
6.1	Page Received	1 = New page received 0 = New page not received yet	RO/LH	0
6.0	Link Partner Auto-Negotiation Able	1 = Link partner has auto-negotiation capability 0 = Link partner does not have auto-negotiation capability	RO	0
Register 7h - Auto-Negotiation Next Page				
7.15	Next Page	1 = Additional next page(s) will follow 0 = Last page	RW	0
7.14	Reserved	—	RO	0
7.13	Message Page	1 = Message page 0 = Unformatted page	RW	1
7.12	Acknowledge2	1 = Will comply with message 0 = Cannot comply with message	RW	0
7.11	Toggle	1 = Previous value of the transmitted link code word equaled logic one 0 = Logic zero	RO	0
7.10:0	Message Field	11-bit wide field to encode 2048 messages	RW	000_0000_0001
Register 8h - Link Partner Next Page Ability				
8.15	Next Page	1 = Additional Next Page(s) will follow 0 = Last page	RO	0
8.14	Acknowledge	1 = Successful receipt of link word 0 = No successful receipt of link word	RO	0
8.13	Message Page	1 = Message page 0 = Unformatted page	RO	0
8.12	Acknowledge2	1 = Able to act on the information 0 = Not able to act on the information	RO	0
8.11	Toggle	1 = Previous value of transmitted link code word equal to logic zero 0 = Previous value of transmitted link code word equal to logic one	RO	0
8.10:0	Message Field	—	RO	000_0000_0000
Register Dh - MMD Access Control Register				
D.15:14	Function	00 = address 01 = data, no post increment 10 = data, post increment on reads and writes 11 = data, post increment on writes only	RW	00

© 2016-2019 Microchip Technology Inc.

TABLE 4-3: STANDARD REGISTER DESCRIPTION (CONTINUED)

Address	Name	Description	Mode (Note 4-1)	Default
D.13:5	Reserved	Write as 0, ignore on read	RW	00_0000_000
D.4:0	DEVAD	Device address	RW	
Register Eh - MMD Access Address Data Register				
E.15:0	Address Data	If D.15:14 = 00, this is MMD DEVAD's address register. Otherwise, this is MMD DEVAD's data register as indicated by the contents of its address register.	RW	0000_0000_0000_0000
Register 10h - Digital Control Register				
10.15:5	Reserved	—	RW	0000_0000_000
10.4	PLL off in EDPD Mode	This mode may optionally be combined with EDPD mode for additional power reduction. 1 = PLL is off in EDPD mode 0 = PLL is on in EDPD mode	RW	0
10.3:0	Reserved	—	RW	0000
Register 11h - AFE Control 0 Register				
11.15:7	Reserved	—	RW	0000_0000_0
11.6	Slow Oscillator Mode	This mode substitutes the 25-MHz clock with a slow oscillator clock, to save oscillator power during power down. 1 = Slow Oscillator mode enabled 0 = Slow Oscillator mode disabled	RW	0
11.5:0	Reserved	—	RW	00_0000
Register 12h - AFE Control 1 Register (Note 4-2)				
12.15:12	100BT amplitude	Trim 100BT TX amplitude Sequence of values: 1000 = maximum amplitude 1001 1010 1011 1100 1101 1110 1111 0000 = default 0001 0010 0011 0100 0101 0110 0111 = minimum amplitude	RW	0000
12.11:0	Reserved	—	RW	0000_0000_0000
Register 13h - AFE Control 2 Register				
13.15	LinkMD Detector Threshold	Sets the threshold for the LinkMD pulse detector. Use high threshold with the large LinkMD pulse, and the low threshold with the small LinkMD pulse. Also see MMD address 1Bh, register 0h bits [7:4]. 1 = Enable high threshold comparator 0 = Disable high threshold comparator	RW	0
13.14:1	Reserved	—	RW	000_0000_0000_000

TABLE 4-3: STANDARD REGISTER DESCRIPTION (CONTINUED)

Address	Name	Description	Mode (Note 4-1)	Default
13.0	Slow Oscillator Mode for Ultra-Deep Sleep mode	This mode substitutes the 25-MHz clock with a slow oscillator clock, to save oscillator power if register access is required during Ultra-Deep Sleep mode. Note that the 1.2V supply is required if this mode is used. 1 = Slow Oscillator mode enabled 0 = Slow Oscillator mode disabled	RW	0
Register 14h - AFE Control 3 Register				
14.15:7	Reserved	—	RW	0000_0000_0
14.6	Ultra-Deep Sleep Method	1 = CPU Control method. Entry into Ultra-Deep Sleep mode determined by value of register bit 14.5 0 = Automatic method. Enter into Ultra-Deep Sleep mode automatically when no cable energy is detected	RW	0
14.5	Manual Ultra-Deep Sleep mode	1 = Enter into Ultra-Deep Sleep mode 0 = Normal operation This bit is used to enter Ultra-Deep Sleep mode when the CPU Control method is selected in bit 14.6. To exit Ultra-Deep Sleep mode, a hardware reset is required.	RW	0
14.4	NV Register Access	1 = Enable non-volatile copy of register 14h and bits [9:8] and [1:0] of register 13h 0 = Disable access to non-volatile registers When Ultra-Deep Sleep mode is enabled, this bit must be set to 1.	RW	0
14.3	Ultra-Deep Sleep mode and SIGDET Enable	1 = Ultra-Deep Sleep mode is not enabled (but not necessarily entered), and SIGDET indicates cable energy detected 0 = Ultra-Deep Sleep mode is disabled, and SIGDET output signal is forced true.	RW	0
14.2	Disable RX Internal Termination	1 = Disable RX internal termination 0 = Enable RX internal termination [Has no effect on TX internal termination.]	RW	0
14.1	Signal Detect Deassertion Timing Delay	When Ultra-Deep Sleep mode is enabled, this bit determines the delay from loss of cable energy to deassertion of SIGDET. When automatic method is selected for Ultra-Deep Sleep mode, this delay also applies to powering down. 1 = Increased delay. This setting is required to allow automatic exiting of Ultra-Deep Sleep mode (automatic method) if the link partner auto-negotiation is enabled, if auto-MDI/MDI-X is enabled, or if linking at 10BASE-T. 0 = Minimum delay. When using the Automatic method for Ultra-Deep Sleep, use this setting only if the link partner's auto-negotiation is disabled, auto-MDI/MDI-X is disabled, and linking is at 100BASE-TX. This setting may also be used for CPU Control method.	RW	0
14.0	Signal Detect Polarity	1 = SIGDET is active low (low = signal detected) 0 = SIGDET is active high (high = signal detected)	RW	0

© 2016-2019 Microchip Technology Inc.

TABLE 4-3: STANDARD REGISTER DESCRIPTION (CONTINUED)

Address	Name	Description	Mode (Note 4-1)	Default
Register 15h - RXER Counter				
15.15:0	RXER Counter	Receive error counter for symbol error frames	RO/SC	0000h
Register 16h - Operation Mode				
16.15:13	Reserved	—	RW	000
16.12	QWF disable	1 = Disable Quiet-Wire Filtering 0 = Enable Quiet-Wire Filtering	RW	Strapping input at RXER pin
16.11:0	Reserved	—	RW	0000_0000_0000
Register 17h - Operation Mode Strap Status				
17.15:13	PHYAD[2:0] strap-in status	[000] = Strap to PHY Address 0 [001] = Strap to PHY Address 1 [010] = Strap to PHY Address 2 [011] = Strap to PHY Address 3 [100] = Strap to PHY Address 4 [101] = Strap to PHY Address 5 [110] = Strap to PHY Address 6 [111] = Strap to PHY Address 7	RO	—
17.12:9	Reserved	—	RO	—
17.8	QWF strap-in status	1 = Strap to disable Quiet-Wire Filtering 0 = Strap to enable Quiet-Wire Filtering	RO	Strapping input at RXER pin
17.7	MII B-to-B strap-in status	1 = Strap to MII Back-to-Back mode	RO	—
17.6	Reserved	—	RO	—
17.5	NAND Tree strap-in status	1 = Strap to NAND Tree mode	RO	—
17.4:1	Reserved	—	RO	—
17.0	MII strap-in status	1 = Strap to MII normal mode	RO	—
Register 18h - Expanded Control				
18.15:12	Reserved	—	RW	0000
18.11	Energy Detect Power Down Mode disable	1 = Disable Energy Detect Power Down (EDPD) mode 0 = Enable EDPD mode	RW	1
18.10	RX PHY Latency	1 = Variable RX PHY latency with no preamble suppression 0 = Fixed RX PHY latency with possible suppression of one preamble nibble. There is an 80% chance of this happening on the first packet received after link-up. The loss is seen at the MII interface. Preamble suppression cannot occur again until after the next link-up.	RW	0
18.9:7	Reserved	—	RW	00_0
18.6	Enable 10BT Preamble	When in Back-to-Back mode and in 10BASE-T, this bit must be set.	RW	0
18.5:0	Reserved	—	RW	00_0001
Register 1Bh - Interrupt Control/Status				

TABLE 4-3: STANDARD REGISTER DESCRIPTION (CONTINUED)

Address	Name	Description	Mode (Note 4-1)	Default
1B.15	Jabber Interrupt Enable	1 = Enable Jabber Interrupt 0 = Disable Jabber Interrupt	RW	0
1B.14	Receive Error Interrupt Enable	1 = Enable Receive Error Interrupt 0 = Disable Receive Error Interrupt	RW	0
1B.13	Page Received Interrupt Enable	1 = Enable Page Received Interrupt 0 = Disable Page Received Interrupt	RW	0
1B.12	Parallel Detect Fault Interrupt Enable	1 = Enable Parallel Detect Fault Interrupt 0 = Disable Parallel Detect Fault Interrupt	RW	0
1B.11	Link Partner Acknowledge Interrupt Enable	1 = Enable Link Partner Acknowledge Interrupt 0 = Disable Link Partner Acknowledge Interrupt	RW	0
1B.10	Link Down Interrupt Enable	1 = Enable Link Down Interrupt 0 = Disable Link Down Interrupt	RW	0
1B.9	Remote Fault Interrupt Enable	1 = Enable Remote Fault Interrupt 0 = Disable Remote Fault Interrupt	RW	0
1B.8	Link Up Interrupt Enable	1 = Enable Link Up Interrupt 0 = Disable Link Up Interrupt	RW	0
1B.7	Jabber Interrupt	1 = Jabber occurred 0 = Jabber did not occur	RO/SC	0
1B.6	Receive Error Interrupt	1 = Receive Error occurred 0 = Receive Error did not occur	RO/SC	0
1B.5	Page Receive Interrupt	1 = Page Receive occurred 0 = Page Receive did not occur	RO/SC	0
1B.4	Parallel Detect Fault Interrupt	1 = Parallel Detect Fault occurred 0 = Parallel Detect Fault did not occur	RO/SC	0
1B.3	Link Partner Acknowledge Interrupt	1 = Link Partner Acknowledge occurred 0 = Link Partner Acknowledge did not occur	RO/SC	0
1B.2	Link Down Interrupt	1 = Link Down occurred 0 = Link Down did not occur	RO/SC	0
1B.1	Remote Fault Interrupt	1 = Remote Fault occurred 0 = Remote Fault did not occur	RO/SC	0
1B.0	Link Up Interrupt	1 = Link Up occurred 0 = Link Up did not occur	RO/SC	0
Register 1Ch - Function Control				
1C.15:6	Reserved	—	RW	0000_0000_00

© 2016-2019 Microchip Technology Inc.

TABLE 4-3: STANDARD REGISTER DESCRIPTION (CONTINUED)

Address	Name	Description	Mode (Note 4-1)	Default
1C.5	Local Loop-back Option	1 = Enable local loopback 0 = Disable local loopback Local loopback must be enabled both here and in register 0h.	RW	0
1C.4:2	Reserved	—	RW	1_00
1C.1:0	Reserved	—	RO	00
Register 1Dh - LinkMD® Control/Status				
1D.15	Cable Diag-nostic Test Enable	1 = Enable cable diagnostic test. After test has completed, this bit is self-cleared. 0 = Indicates cable diagnostic test (if enabled) has completed and the status information is valid for read.	RW/SC	0
1D.14:13	Cable Diag-nostic Test Result	[00] = normal condition [01] = open condition has been detected in cable [10] = short condition has been detected in cable [11] = cable diagnostic test has failed	RO	00
1D.12	Short Cable Indicator	1 = Short cable (<10 meter) has been detected by LinkMD.	RO	0
1D.11:9	Reserved	—	RW	000
1D.8:0	Cable Fault Counter	Distance to fault	RO	0_0000_0000
Register 1Eh - PHY Control 1				
1E15:10	Reserved	—	RO	0000_00
1E.9	Enable Pause (Flow Control)	1 = Flow control capable 0 = No flow control capability	RO	0
1E.8	Link Status	1 = Link is up 0 = Link is down	RO	—
1E.7	Polarity Status	1 = Polarity is reversed 0 = Polarity is not reversed	RO	—
1E.6	Reserved	—	RO	0
1E.5	MDI/MDI-X State	1 = MDI-X 0 = MDI	RO	—
1E.4	Energy Detect	1 = Presence of signal on receive differential pair 0 = No signal detected on receive differential pair	RO	—
1E.3	PHY Isolate	1 = PHY in isolate mode 0 = PHY in normal operation [Same as register bit 0.10]	RW	0
1E.2:0	Operation Mode Indication	[000] = still in auto-negotiation [001] = 10BASE-T half-duplex [010] = 100BASE-TX half-duplex [011] = reserved [100] = reserved [101] = 10BASE-T full-duplex [110] = 100BASE-TX full-duplex [111] = reserved	RO	—
Register 1Fh - PHY Control 2				
1F.15	HP_MDIX	1 = HP Auto MDI/MDI-X mode 0 = Micrel Auto MDI/MDI-X mode	RW	1

TABLE 4-3: STANDARD REGISTER DESCRIPTION (CONTINUED)

Address	Name	Description	Mode (Note 4-1)	Default
1F.14	MDI/MDI-X Select	When Auto MDI/MDI-X is disabled, 1 = MDI-X mode Transmit on RXP,RXM and Receive on TXP,TXM 0 = MDI mode Transmit on TXP,TXM and Receive on RXP,RXM	RW	0
1F.13	Pair Swap Disable	1 = Disable auto MDI/MDI-X 0 = Enable auto MDI/MDI-X	RW	Value determined by strapping option
1F.12	Reserved	—	RW	0
1F.11	Force Link	1 = Force link pass 0 = Normal link operation This bit bypasses the control logic and allow transmitter to send pattern even if there is no link. It does not cause a link-up condition to occur.	RW	0
1F.10	Power Saving	1 = Enable power saving 0 = Disable power saving	RW	0
1F.9	Interrupt Level	1 = Interrupt pin active high 0 = Interrupt pin active low	RW	0
1F.8	Enable Jabber	1 = Enable jabber counter 0 = Disable jabber counter	RW	1
1F.7:6	Reserved	—	RW	00
1F.5:4	LED Mode	[00] = LED1: Speed, LED0: Link / Activity [01] = LED1: Activity, LED0: Link [10] = reserved [11] = reserved	RW	01 (KSZ8061MNX) 00 (KSZ8061MNG)
1F.3	Disable Transmitter	1 = Disable transmitter 0 = Enable transmitter	RW	0
1F.2	Remote Loopback	1 = Remote (analog) loopback is enabled 0 = Normal mode	RW	0
1F.1	Enable SQE Test	1 = Enable SQE test 0 = Disable SQE test	RW	0
1F.0	Disable Data Scrambling	1 = Disable scrambler 0 = Enable scrambler	RW	0

Note 4-1 RW = Read/Write; RO = Read Only; SC = Self-Cleared; LH = Latch High; LL = Latch Low

Note 4-2 If necessary, the value of this register can be used to adjust the transmit amplitude to achieve IEEE 802.3 Transmit Waveform Mask compliance. Increasing the register value decreases the TX amplitude, and decreasing the register value increases the TX amplitude.

© 2016-2019 Microchip Technology Inc.

4.3 MMD Registers

MMD registers provide indirect read/write access to up to 32 MMD device addresses with each device supporting up to 65,536 16-bit registers, as defined in clause 22 of the IEEE 802.3 Specification. The KSZ8061, however, uses only a small fraction of the available registers. See Section 4.1, Register Map for a list of supported MMD device addresses and their associated register addresses.

The following two standard registers serve as the portal registers to access the indirect MMD registers.

- Standard register Dh – MMD Access – Control
- Standard register Eh – MMD Access – Register/Data

TABLE 4-4: MMD REGISTERS

Address	Name	Description	Mode	Default
Register Dh - MMD Access Control Register				
D.15:14	Function	00 = address 01 = data, no post increment 10 = data, post increment on reads and writes 11 = data, post increment on writes only	RW	00
D.13:5	Reserved	Write as 0, ignore on read	RW	00_0000_000
D.4:0	DEVAD	These five bits set the MMD device address	RW	0_0000
Register Eh - MMD Access Address Data Register				
E.15:0	Address/ Data	When register Dh, bits [15:14] = 00, this register contains the MMD DEVAD's address register. Otherwise, this register contains the MMD DEVAD's data register as indicated by the contents of its address register.	RW	0000_0000_0

Examples:

MMD Register Write

Write MMD - Device Address 7h, Register 3Ch = 0002h.

1. Write Register Dh with 0007h // Set up register address for MMD – Device Address 7h.
2. Write Register Eh with 003Ch // Select register 3Ch of MMD – Device Address 7h.
3. Write Register Dh with 4007h // Select register data for MMD – Device Address 7h, Register 3Ch.
4. Write Register Eh with 0002h // Write value 0002h to MMD – Device Address 7h, Register 3Ch.

MMD Register Read

Read MMD - Device Address 1Fh, Register 19h - 1Bh.

1. Write Register Dh with 001Fh // Set up register address for MMD – Device Address 1Fh.
2. Write Register Eh with 0019h // Select register 19h of MMD – Device Address 1Fh.
3. Write Register Dh with 801Fh // Select register data for MMD – Device Address 1Fh, Register 19h // with post increments.
4. Read Register Eh // Read data in MMD – Device Address 1Fh, Register 19h.
5. Read Register Eh // Read data in MMD – Device Address 1Fh, Register 1Ah.
6. Read Register Eh // Read data in MMD – Device Address 1Fh, Register 1Bh.

Basic Status Register

TABLE 4-5: MMD REGISTERS

Address	Name	Description	Mode	Default
MMD Address 7h, Register 3Ch - Reserved				
7.3C.15:8	Reserved	—	RO	0000_0000
7.3C.7:3	Reserved	—	RW	0000_0
7.3C.2	Reserved	—	RW	0
7.3C.1	Reserved	—	RW	0
7.3C.0	Reserved	—	RW	0
MMD Address 7h, Register 3Dh - Reserved				
7.3D.15:3	Reserved	—	RO	0000_0000_0000_0
7.3D.2	Reserved	—	RO	0
7.3D.1	Reserved	—	RO	0
7.3D.0	Reserved	—	RO	0
MMD Address 1Bh, Register 0h - AFED Control Register				
1B.0.15:8	Reserved		RW	0000_0000
1B.0.7:4	LinkMD Pulse Amplitude	Sets the amplitude of the LinkMD pulse. Default value (0x2) is a small pulse. Set to 0x7 for a large pulse. Also see register 13h bit [15].	RW	0010
1B.0.3:0	Reserved	—	RW	0000
MMD Address 1Ch, Register ACh - Signal Quality Register				
1C.AC.15	Reserved	—	RO	0
1C.AC.14:8	Signal Quality Indicator	SQI indicates relative quality of the signal. A lower value indicates better signal quality.	RO	xxx_xxxx
1C.AC.7:0	Reserved	—	RO	0000_0000

© 2016-2019 Microchip Technology Inc.

5.0 OPERATIONAL CHARACTERISTICS

5.1 Absolute Maximum Ratings*

Supply Voltage (VDDIO, AVDDH) ..... –0.5V to +5.0V

Supply Voltage (VDDL, AVDDL) ..... –0.5V to +1.8V

Input Voltage (all inputs) ..... –0.5V to +5.0V

Output Voltage (all outputs) ..... –0.5V to +5.0V

Lead Temperature (soldering, 10 sec.) ..... 260°C

Storage Temperature (T_S) ..... –55°C to +150°C

HBM ESD Rating ..... 5 kV

*Exceeding the absolute maximum rating may damage the device. Stresses greater than the absolute maximum rating may cause permanent damage to the device. Operation of the device at these or any other conditions above those specified in the operating sections of this specification is not implied. Maximum conditions for extended periods may affect reliability.

5.2 Operating Conditions**

Supply Voltage

(AVDDH @ 3.3V) ..... +3.135V to +3.465V

(VDDIO @ 3.3V) ..... +3.135V to +3.465V

(VDDIO @ 2.5V) ..... +2.375V to +2.625V

(VDDIO @ 1.8V) ..... +1.71V to +1.89V

(VDDL, AVDDL) ..... +1.14V to +1.26V

Ambient Temperature

(T_A, Industrial) ..... –40°C to +85°C

(T_A, Extended) ..... –40°C to +105°C

Maximum Junction Temperature (T_J max.) ..... 125°C

Thermal Resistance (Θ_{JA}, 32-QFN, 32-WQFN) ..... 34°C/W

Thermal Resistance (Θ_{JC}, 32-QFN, 32-WQFN) ..... 6°C/W

Thermal Resistance (Θ_{JA}, 48-QFN) ..... 36°C/W

Thermal Resistance (Θ_{JC}, 48-QFN) ..... 9°C/W

**The device is not guaranteed to function outside its operating ratings.

Note:	Do not drive input signals without power supplied to the device.

6.0 ELECTRICAL CHARACTERISTICS

T_A = 25°C, bold values indicate –40°C ≤ T_A ≤ +85°C, unless noted.

TABLE 6-1: ELECTRICAL CHARACTERISTICS

Symbol	Parameter	Condition	Min.	Typ.	Max.	Units
Supply Current for VDDL, AVDDL						
I_{CORE}	1.2V Current for VDDL + AVDDL	No link, attempting to auto-negotiate	—	59	—	mA
		100BASE-TX full-duplex at 100% utilization	—	45	—	
		100BASE-TX link up, no traffic	—	45	—	
		10BASE-T full-duplex at 100% utilization	—	17	—	
		10BASE-T link up, no traffic	—	17	—	
		Energy Detect Power Down (EDPD) mode, no link partner (reg. 18h.11 = 0)	—	16	—	
		EDPD mode with PLL off, no link partner (reg. 18h.11 = 0; reg. 10h.4 = 1)	—	0.7	—	
		Power Down mode (reg. 0h.11 = 1)	—	0.5	—	
		Power Down mode, MII isolate, slow oscillator mode (reg. 0h.11 = 1; reg. 0h.10 = 1; reg. 11h.6 = 1)	—	0.05	—	
		Ultra-Deep Sleep mode with 1.2V (reg. 14h = 0x0078)	—	46	—	µA
		Ultra-Deep Sleep mode, VDDL and AVDDL = 0V (reg. 14h = 0x0078)	—	0	—	
Supply Current for VDDIO						
$I_{VDDIO_1.8}$	1.8V Current for Digital I/Os	No link, attempting to auto-negotiate	—	2.3	—	mA
		100BASE-TX full-duplex at 100% utilization	—	3.8	—	
		100BASE-TX link up, no traffic	—	2.3	—	
		10BASE-T full-duplex at 100% utilization	—	0.5	—	
		10BASE-T link up, no traffic	—	0.4	—	
		Energy Detect Power Down (EDPD) mode, no link partner (reg. 18h.11 = 0)	—	2.3	—	
		EDPD mode with PLL off, no link partner (reg. 18h.11 = 0; reg. 10h.4 = 1)	—	0.15	—	
		Power Down mode (reg. 0h.11 = 1)	—	0.17	—	
		Power Down mode, MII isolate, slow oscillator mode (reg. 0h.11 = 1; reg. 0h.10 = 1; reg. 11h.6 = 1)	—	0.04	—	
		Ultra-Deep Sleep mode with 1.2V (reg. 14h = 0x0078)	—	43	—	µA
		Ultra-Deep Sleep mode, VDDL and AVDDL = 0V (reg. 14h = 0x0078)	—	0.2	—	

© 2016-2019 Microchip Technology Inc.

TABLE 6-1: ELECTRICAL CHARACTERISTICS (CONTINUED)

Symbol	Parameter	Condition	Min.	Typ.	Max.	Units
$I_{VDDIO_2.5}$	2.5V Current for Digital I/Os	No link, attempting to auto-negotiate	—	3.3	—	mA
		100BASE-TX full-duplex at 100% utilization	—	5.9	—	
		100BASE-TX link up, no traffic	—	3.3	—	
		10BASE-T full-duplex at 100% utilization	—	1.0	—	
		10BASE-T link up, no traffic	—	0.6	—	
		Energy Detect Power Down (EDPD) mode, no link partner (reg. 18h.11 = 0)	—	3.9	—	
		EDPD mode with PLL off, no link partner (reg. 18h.11 = 0; reg. 10h.4 = 1)	—	0.23	—	
		Power Down mode (reg. 0h.11 = 1)	—	0.23	—	
		Power Down mode, MII isolate, slow oscillator mode (reg. 0h.11 = 1; reg. 0h.10 = 1; reg. 11h.6 = 1)	—	0.10	—	
		Ultra-Deep Sleep mode with 1.2V (reg. 14h = 0x0078)	—	100	—	µA
		Ultra-Deep Sleep mode, VDDL and AVDDL = 0V (reg. 14h = 0x0078)	—	0.01	—	
$I_{VDDIO_3.3}$	3.3V Current for Digital I/Os	No link, attempting to auto-negotiate	—	6.5	—	mA
		100BASE-TX full-duplex at 100% utilization	—	11	—	
		100BASE-TX link up, no traffic	—	6.5	—	
		10BASE-T full-duplex at 100% utilization	—	1.7	—	
		10BASE-T link up, no traffic	—	1.1	—	
		Energy Detect Power Down (EDPD) mode, no link partner (reg. 18h.11 = 0)	—	6.6	—	
		EDPD mode with PLL off, no link partner (reg. 18h.11 = 0; reg. 10h.4 = 1)	—	0.56	—	
		Power Down mode (reg. 0h.11 = 1)	—	0.51	—	
		Power Down mode, MII isolate, slow oscillator mode (reg. 0h.11 = 1; reg. 0h.10 = 1; reg. 11h.6 = 1)	—	0.18	—	
		Ultra-Deep Sleep mode with 1.2V (reg. 14h = 0x0078)	—	180	—	µA
		Ultra-Deep Sleep mode, VDDL and AVDDL = 0V (reg. 14h = 0x0078)	—	0.01	—	

TABLE 6-1: ELECTRICAL CHARACTERISTICS (CONTINUED)

Symbol	Parameter	Condition	Min.	Typ.	Max.	Units
Supply Current for AVDDH						
$I_{AVDDH_3.3}$	3.3V Current for Transceiver	No link, attempting to auto-negotiate	—	19	—	mA
		100BASE-TX full-duplex at 100% utilization	—	24	—	
		100BASE-TX link up, no traffic	—	24	—	
		10BASE-T full-duplex at 100% utilization	—	28	—	
		10BASE-T link up, no traffic	—	16	—	
		Energy Detect Power Down (EDPD) mode, no link partner (reg. 18h.11 = 0)	—	4.3	—	
		EDPD mode with PLL off, no link partner (reg. 18h.11 = 0; reg. 10h.4 = 1)	—	2.2	—	
		Power Down mode (reg. 0h.11 = 1)	—	1.0	—	
		Power Down mode, MII isolate, slow oscillator mode (reg. 0h.11 = 1; reg. 0h.10 = 1; reg. 11h.6 = 1)	—	0.18	—	
		Ultra-Deep Sleep mode with 1.2V (reg. 14h = 0x0078)	—	0.5	—	µA
		Ultra-Deep Sleep mode, VDDL and AVDDL = 0V (reg. 14h = 0x0078)	—	0.4	—	
CMOS Inputs (MDC, RESET, TXD, TXEN)						
V_{IH}	Input High Voltage	VDDIO = 3.3V	2.0	—	—	V
		VDDIO = 2.5V	1.5	—	—	
		VDDIO = 1.8V	1.1	—	—	
V_{IL}	Input Low Voltage	VDDIO = 3.3V	—	—	1.3	V
		VDDIO = 2.5V	—	—	1.0	
		VDDIO = 1.8V	—	—	0.7	
$\lvert I_{IN} \rvert$	Input Current	V_{IN} = GND ~ VDDIO	—	—	10	µA
CMOS Outputs (COL, CRS, LED, RXC, RXD, RXDV, RXER, SIGDET, TXC)						
V_{OH}	Output High Voltage	VDDIO = 3.3V, I_{OH} = 12 mA	2.4	—	—	V
		VDDIO = 2.5V, I_{OH} = 6 mA	2.0	—	—	
		VDDIO = 1.8V, I_{OH} = 10 mA	1.4	—	—	
V_{OL}	Output Low Voltage	VDDIO = 3.3V, I_{OL} = 6 mA	—	—	0.4	V
		VDDIO = 2.5V, I_{OL} = 5 mA	—	—	0.4	
		VDDIO = 1.8V, I_{OL} = 10 mA	—	—	0.4	
$\lvert I_{OZ} \rvert$	Output Tri-State Leakage	V_{OUT} = GND ~ VDDIO	—	—	10	µA
All Pull-Up/Pull-Down Pins (including Strapping Pins)						
pu	Internal Pull-Up Resistance	VDDIO = 3.3V, external 4.7kΩ pull-down	—	33	—	kΩ
		VDDIO = 2.5V, external 4.7kΩ pull-down	—	47	—	
		VDDIO = 1.8V, external 4.7kΩ pull-down	—	82	—	
pd	Internal Pull-Down Resistance	VDDIO = 3.3V, external 4.7kΩ pull-up	—	36	—	kΩ
		VDDIO = 2.5V, external 4.7kΩ pull-up	—	48	—	
		VDDIO = 1.8V, external 4.7kΩ pull-up	—	80	—	
100BASE-TX Transmit (measured differentially after 1:1 transformer)						
V_O	Peak Differential Output Voltage	100Ω termination across differential output	0.95	—	1.05	V

© 2016-2019 Microchip Technology Inc.

TABLE 6-1: ELECTRICAL CHARACTERISTICS (CONTINUED)

Symbol	Parameter	Condition	Min.	Typ.	Max.	Units
V_{IMB}	Output Voltage Imbalance	100Ω termination across differential output	—	—	2	%
t_r/t_f	Rise/Fall Time	—	3	—	5	ns
	Rise/Fall Time Imbalance	—	0	—	0.5	
	Duty Cycle Distortion	—	—	—	±0.25	
	Overshoot	—	—	—	5	%
	Output Jitter	Peak-to-peak	—	0.7	—	ns
10BASE-T Transmit (measured differentially after 1:1 transformer)						
V_P	Peak Differential Output Voltage	100Ω termination across differential output	2.2	—	2.8	V
	Jitter Added	Peak-to-peak	—	—	3.5	ns
t_r/t_f	Rise/Fall Time	—	—	25	—	
10BASE-T Receive						
V_{SQ}	Squelch Threshold	5 MHz square wave	—	400	—	mV
100 Mbps Mode - Industrial Applications Parameters						
	Clock Phase Delay – XI input to MII TXC output	XI (25-MHz clock input) to MII TXC (25-MHz clock output) delay, referenced to rising edges of both clocks	15	20	25	ns
t_{llr}	Link Loss Reaction (Indication) Time	Link loss detected at receive differential inputs to PHY signal indication time for each of the following: 1. For LED mode “00”, Speed LED output change from low (100 Mbps) to high (10 Mbps – default state for link-down). 2. For LED mode “01”, Link LED output change from low (link-up) to high (link-down). 3. INTRP pin assertion for link-down status change.	—	4.8	—	µs

7.0 TIMING DIAGRAMS

FIGURE 7-1: MII TRANSMIT TIMING (10BASE-T)

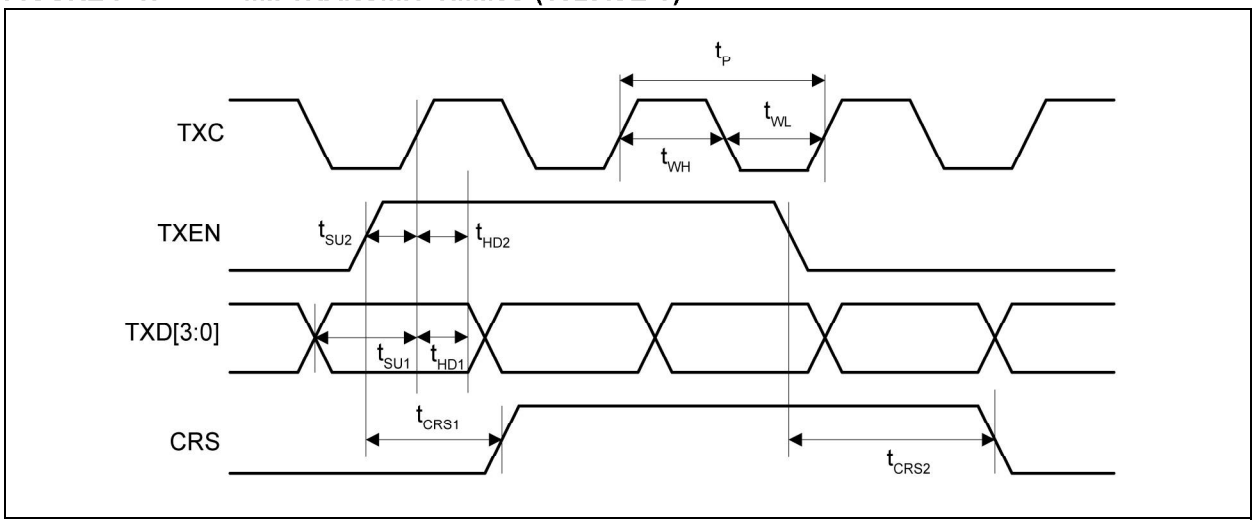

TABLE 7-1: MII TRANSMIT TIMING (10BASE-T) PARAMETERS

Timing Parameter	Description	Min.	Typ.	Max.	Units
t_P	TXC period	—	400	—	ns
t_{WL}	TXC pulse width low	—	200	—	
t_{WH}	TXC pulse width high	—	200	—	
t_{SU1}	TXD[3:0] setup to rising edge of TXC	120	—	—	
t_{SU2}	TXEN setup to rising edge of TXC	120	—	—	
t_{HD1}	TXD[3:0] hold from rising edge of TXC	0	—	—	
t_{HD2}	TXEN hold from rising edge of TXC	0	—	—	
t_{CRS1}	TXEN high to CRS asserted latency	—	600	—	
t_{CRS2}	TXEN low to CRS deasserted latency	—	1.0	—	µs

© 2016-2019 Microchip Technology Inc.

FIGURE 7-2: MII RECEIVE TIMING (10BASE-T)

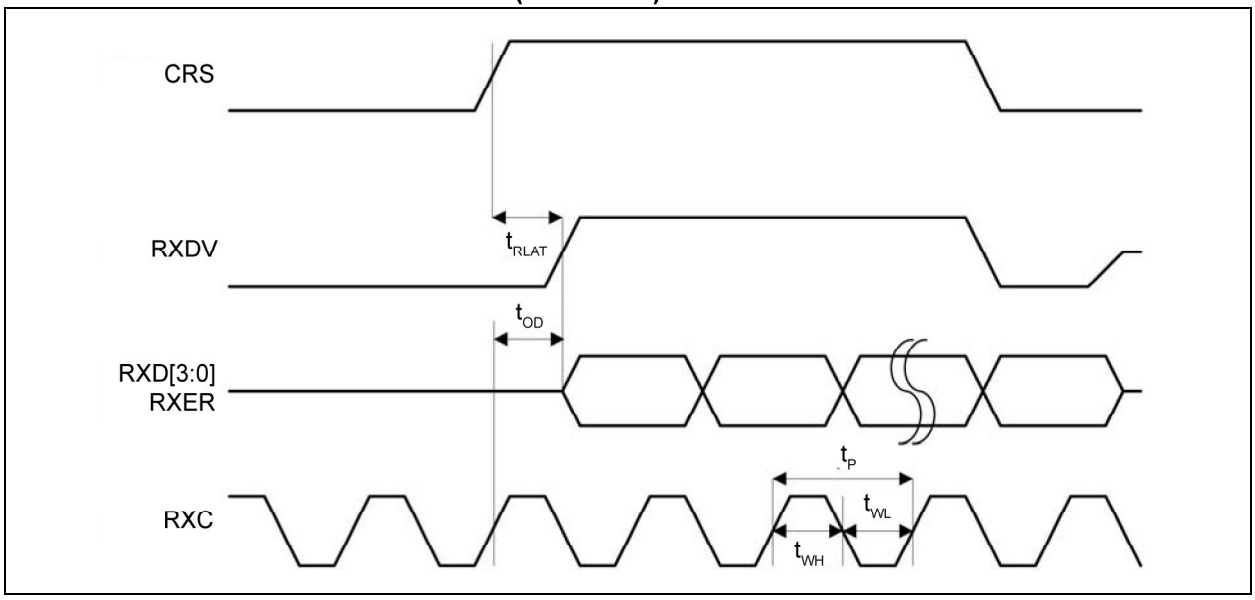

TABLE 7-2: MII RECEIVE TIMING (10BASE-T) PARAMETERS

Timing Parameter	Description	Min.	Typ.	Max.	Units
t_P	RXC period	—	400	—	ns
t_{WL}	RXC pulse width low	—	200	—	
t_{WH}	RXC pulse width high	—	200	—	
t_{OD}	(RXDV, RXD[3:0], RXER) output delay from rising edge of RXC	—	205	—	
t_{RLAT}	CRS to (RXDV, RXD[3:0]) latency	—	7.2	—	µs

FIGURE 7-3: MII TRANSMIT TIMING (100BASE-TX)

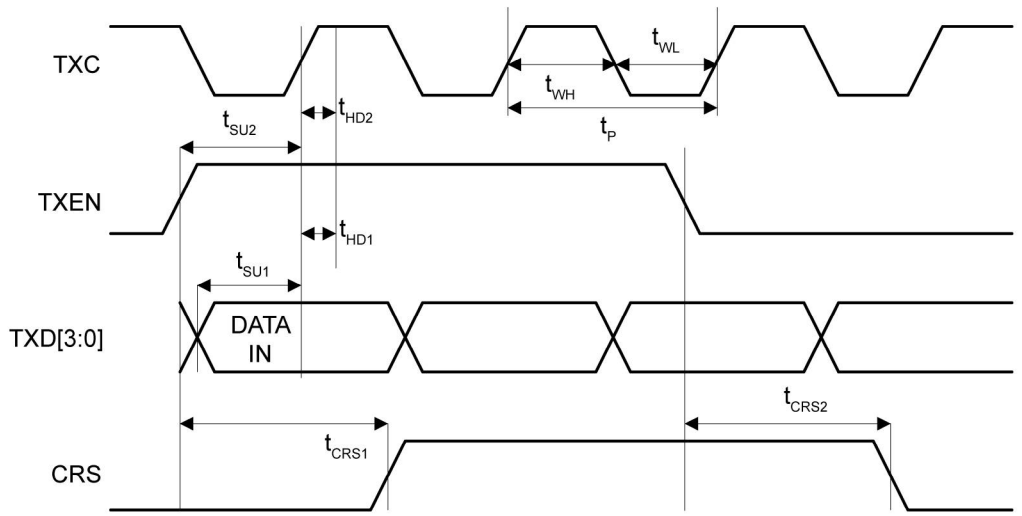

TABLE 7-3: MII TRANSMIT TIMING (100BASE-TX) PARAMETERS

Timing Parameter	Description	Min.	Typ.	Max.	Units
t_P	TXC period	—	40	—	ns
t_{WL}	TXC pulse width low	—	20	—	
t_{WH}	TXC pulse width high	—	20	—	
t_{SU1}	TXD[3:0] setup to rising edge of TXC	10	—	—	
t_{SU2}	TXEN setup to rising edge of TXC	10	—	—	
t_{HD1}	TXD[3:0] hold from rising edge of TXC	0	—	—	
t_{HD2}	TXEN hold from rising edge of TXC	0	—	—	
t_{CRS1}	TXEN high to CRS asserted latency	—	72	—	
t_{CRS2}	TXEN low to CRS deasserted latency	—	72	—	

© 2016-2019 Microchip Technology Inc.

FIGURE 7-4: MII RECEIVE TIMING (100BASE-TX)

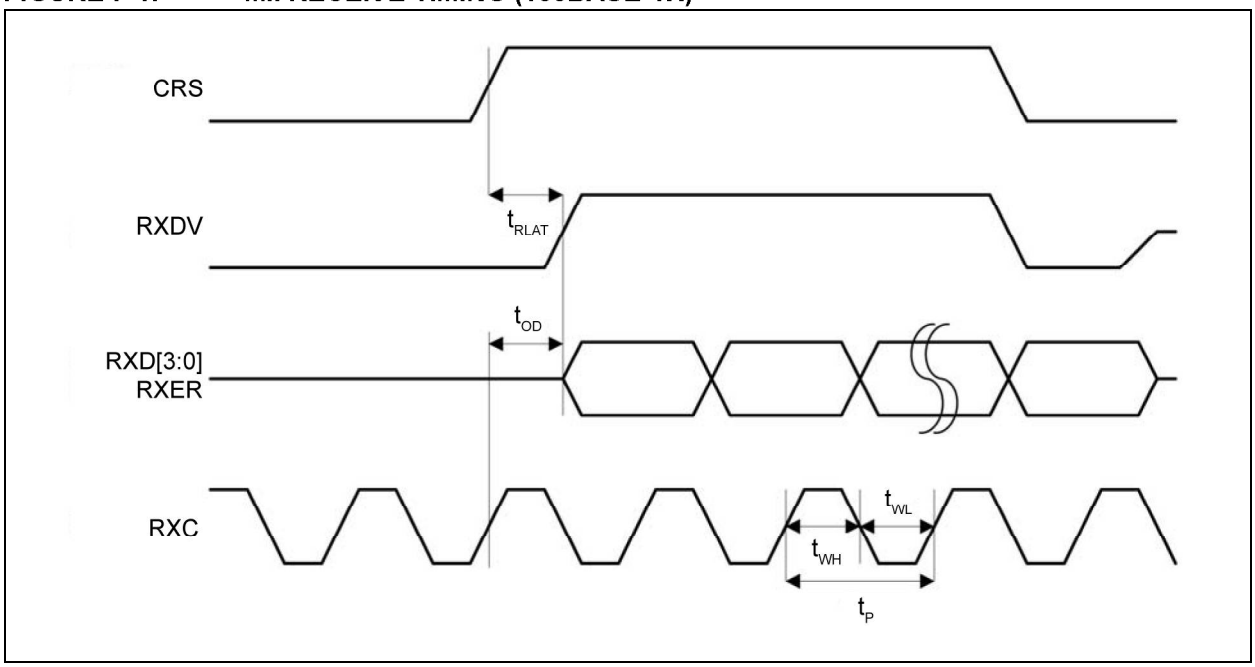

TABLE 7-4: MII RECEIVE TIMING (100BASE-T) PARAMETERS

Timing Parameter	Description	Min.	Typ.	Max.	Units
t_P	RXC period	—	40	—	ns
t_{WL}	RXC pulse width low	—	20	—	
t_{WH}	RXC pulse width high	—	20	—	
t_{OD}	(RXDV, RXD[3:0], RXER) output delay from rising edge of RXC	13	22	28	
t_{RLAT}	CRS to (RXDV, RXD[3:0]) latency	—	170	—	

FIGURE 7-5: AUTO-NEGOTIATION FAST LINK PULSE (FLP) TIMING

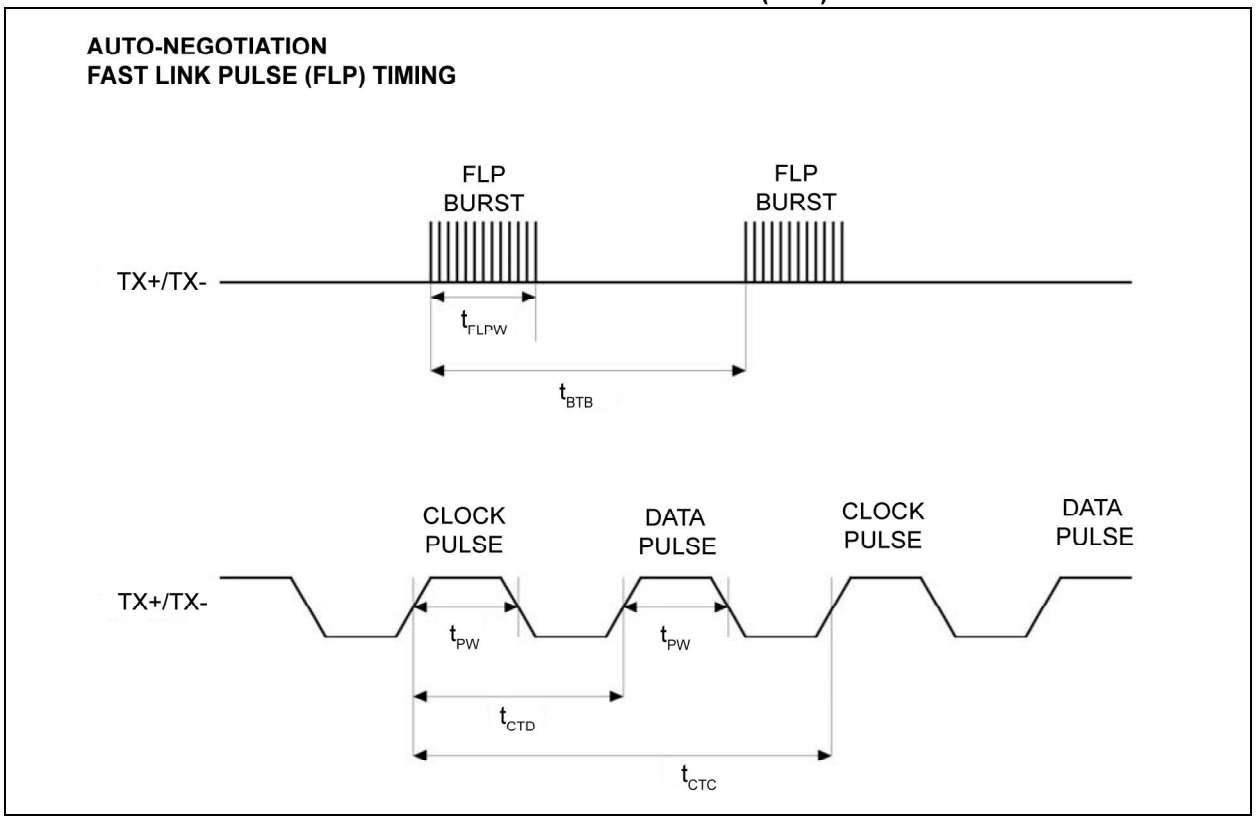

TABLE 7-5: AUTO-NEGOTIATION FAST LINK PULSE (FLP) TIMING PARAMETERS

Timing Parameter	Description	Min.	Typ.	Max.	Units
t_{BTB}	FLP burst to FLP burst	8	16	24	ms
t_{FLPW}	FLP burst width	—	2	—	
t_{PW}	Clock/Data pulse width	—	100	—	ns
t_{CTD}	Clock pulse to data pulse	55.5	64	69.5	µs
t_{CTC}	Clock pulse to clock pulse	111	128	139	
	Number of clock/data pulses per FLP burst	17	—	33	—

© 2016-2019 Microchip Technology Inc.

FIGURE 7-6: MDC/MDIO TIMING

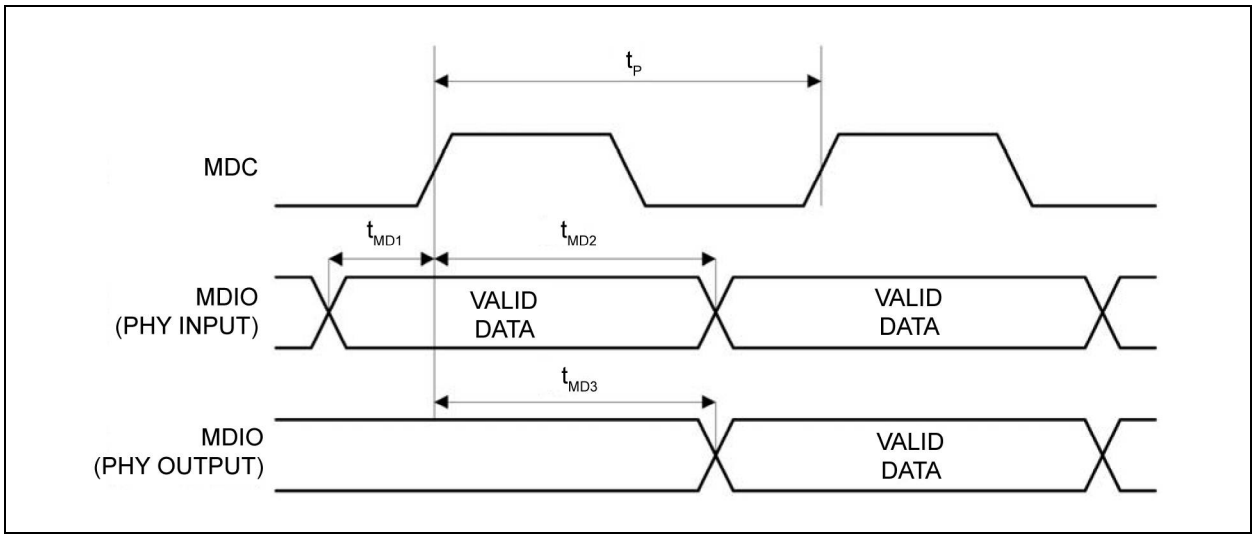

TABLE 7-6: MDC/MDIO TIMING PARAMETERS

Timing Parameter	Description	Min.	Typ.	Max.	Units
t_P	FLP burst to FLP burst	400	—	—	ns
t_{MD1}	FLP burst width	10	—	—	
t_{MD2}	Clock/Data pulse width	4	—	—	
t_{MD3}	Clock pulse to data pulse	5	—	Note 7-1	

Note 7-1 Maximum high-to-low time is 25 ns. Maximum low-to-high time is determined by the external pull-up resistor. Maximum low-to-high time is 25 ns.

FIGURE 7-7: POWER-UP/RESET TIMING

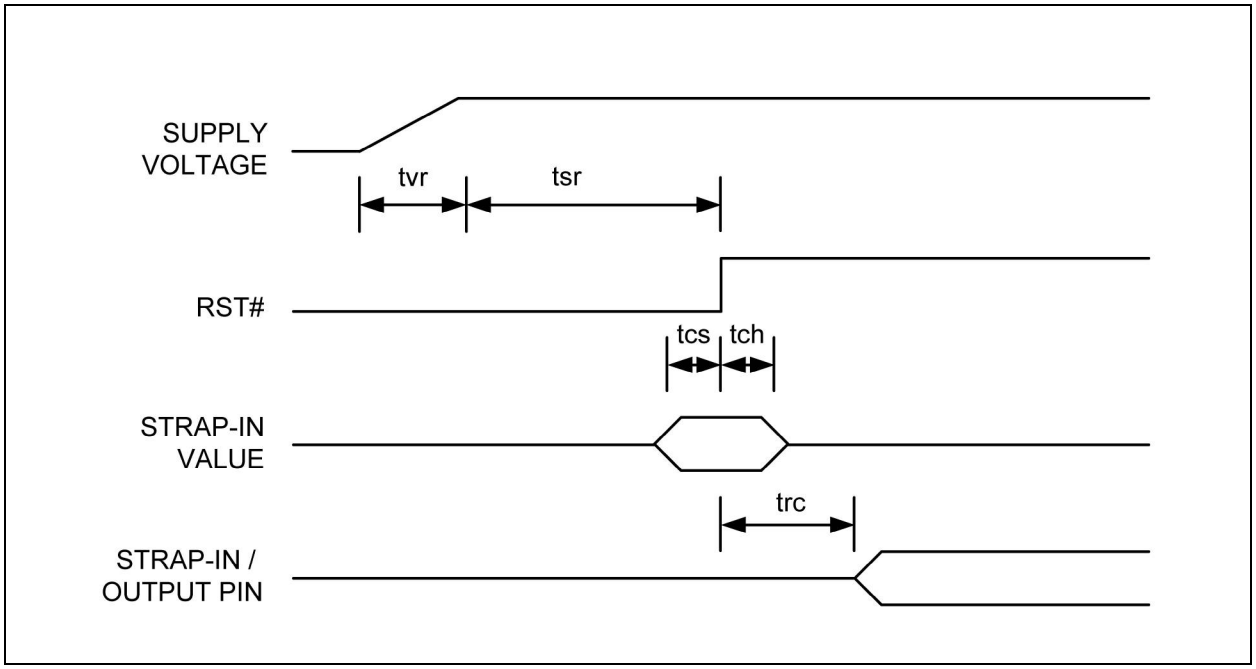

The KSZ8061MN reset timing requirement is summarized in Figure 7-7 and Table 7-7.

TABLE 7-7: POWER-UP/RESET TIMING PARAMETERS

Timing Parameter	Description	Min.	Typ.	Max.	Units
t_{VR}	Supply voltage (VDDIO, AVDD, VDDL, AVDDL) rise time	300	—	—	µs
t_{SR}	Stable supply voltage (VDDIO, AVDD, VDDL, AVDDL) to reset high	10	—	—	ms
t_{CS}	Configuration setup time	5	—	—	ns
t_{CH}	Configuration hold time	5	—	—	
t_{RC}	Reset to strap-in pin output	6	—	—	

The supply voltage (VDDIO, AVDD, VDDL, AVDDL) power-up waveforms should be monotonic, and the 300 µs minimum rise time is from 10% to 90%.

For warm reset, the reset (RESET#) pin should be asserted low for a minimum of 500 µs. The strap-in pin values are read and updated at the deassertion of reset.

After the deassertion of reset, it is recommended to wait a minimum of 100 µs before starting programming on the MIIM (MDC/MDIO) Interface.

© 2016-2019 Microchip Technology Inc.

8.0 RESET CIRCUIT

Figure 8-1 shows a reset circuit recommended for powering up the KSZ8061MN if reset is triggered by the power supply.

FIGURE 8-1: RECOMMENDED RESET CIRCUIT

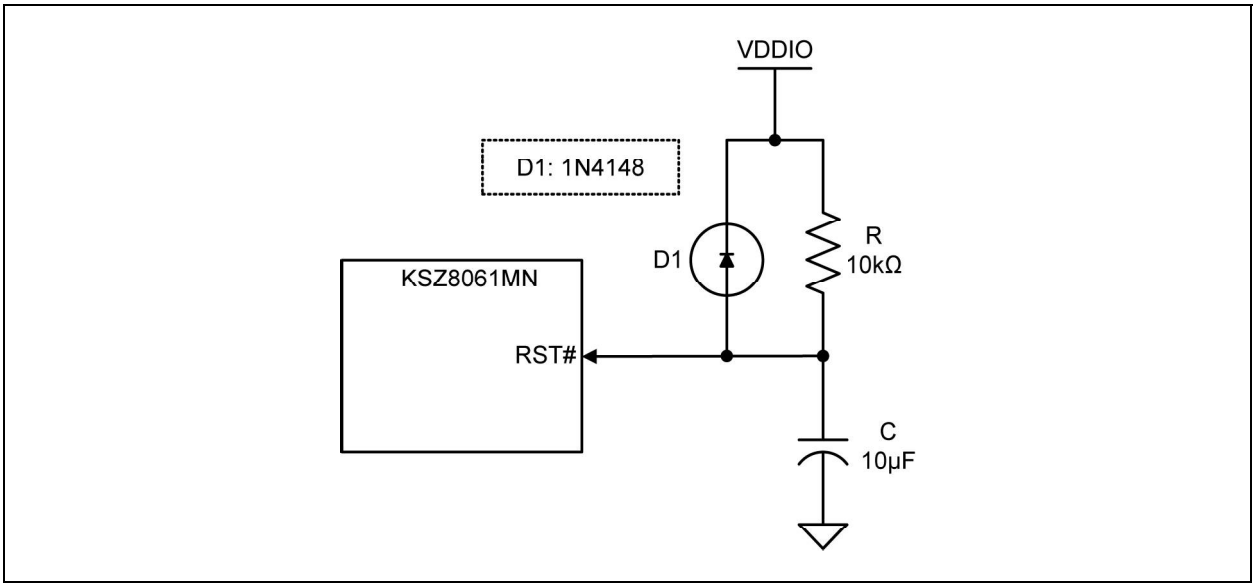

Figure 8-2 represents a reset circuit recommended for applications where reset is driven by another device (for example, CPU or FPGA). At power-on-reset, R, C, and D1 provide the necessary ramp rise time to reset the KSZ8061MN. The RST_OUT_n from CPU/FPGA provides the warm reset after power-up.

FIGURE 8-2: RECOMMENDED RESET CIRCUIT FOR CPU/FPGA RESET OUTPUT

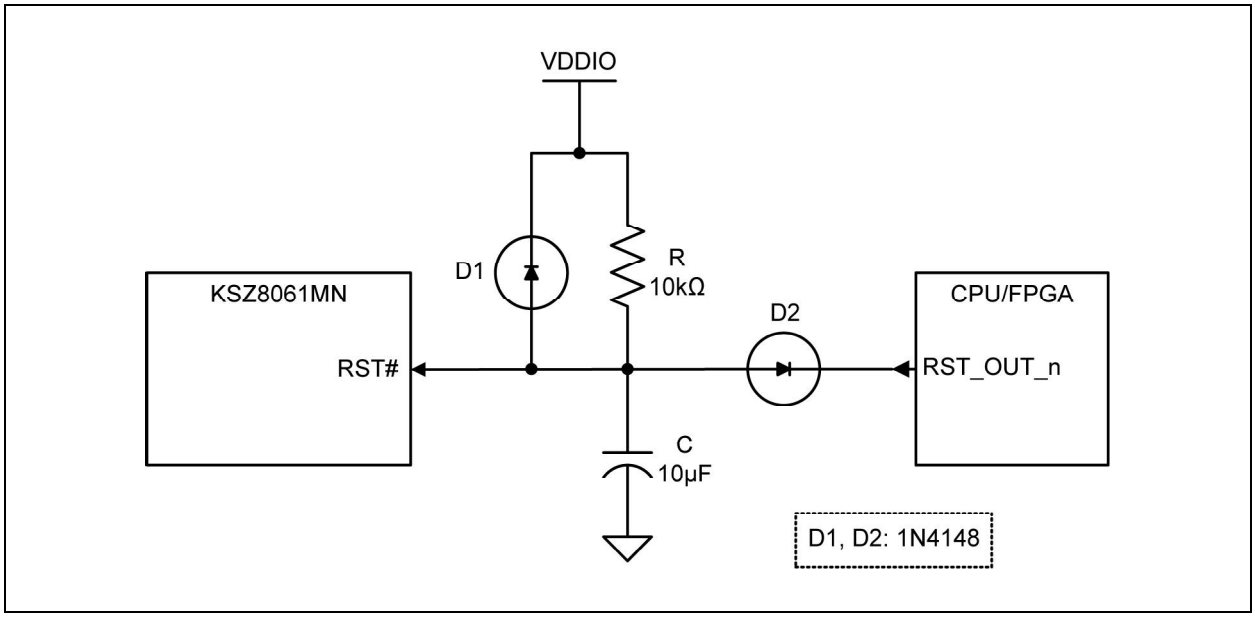

9.0 REFERENCE CLOCK — CONNECTION AND SELECTION

A crystal or external clock source, such as an oscillator, is used to provide the reference clock for the KSZ8061MN. For the KSZ8061MN in all operating modes, the reference clock is 25 MHz. An oscillator should be powered by the same voltage as AVDDH (3.3V). The reference clock connections to XI (pin 1) and XO (pin 2), and the reference clock selection criteria are provided in Figure 9-1 and Table 9-1.

FIGURE 9-1: 25-MHZ CRYSTAL/OSCILLATOR REFERENCE CLOCK CONNECTION

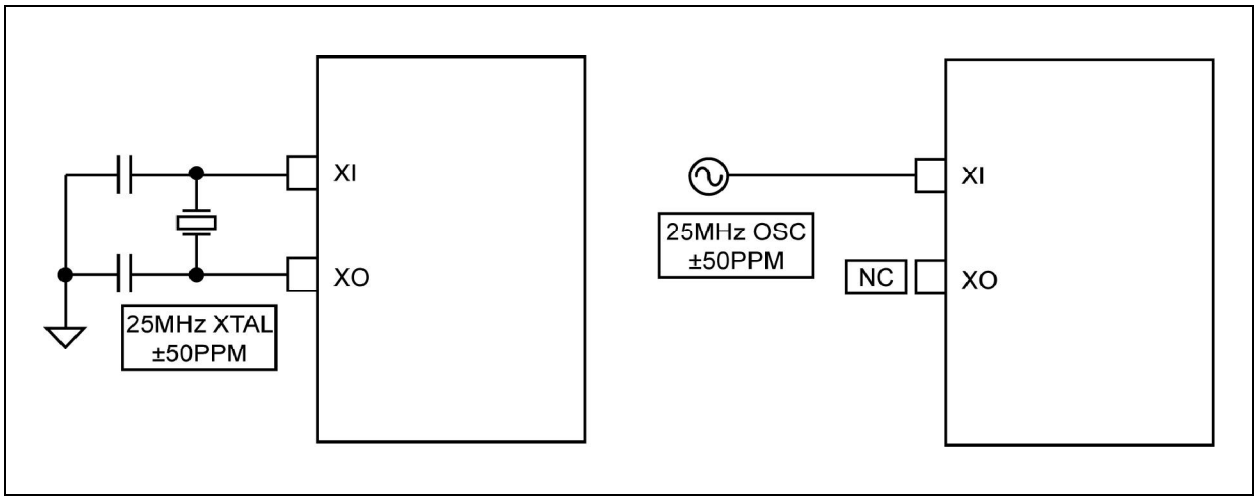

TABLE 9-1: 25-MHZ CRYSTAL/REFERENCE CLOCK SELECTION CRITERIA

Characteristics	Value
Frequency	25 MHz
Frequency Tolerance (max.)	±50 ppm
Crystal Drive Level	150 µW

TABLE 9-2: RECOMMENDED CRYSTALS

Manufacturer	Part Number
NDK	NX2016SA
Murata	XRCGB25M000F3A00R0

© 2016-2019 Microchip Technology Inc.

10.0 MAGNETIC – CONNECTION AND SELECTION

The KSZ8061MNX/MNG design incorporates voltage-mode transmit drivers and on-chip terminations.

With the voltage-mode implementation, the transmit drivers supply the common-mode voltages to the two differential pairs. Therefore, the two transformer center tap pins on the KSZ8061MNX/MNG side should not be connected to any power supply source on the board. Instead, the center tap pins should be separated from one another and connected through separate 0.1 µF common-mode capacitors to ground. Separation is required because the common-mode voltage is different between transmitting and receiving differential pairs.

Figure 10-1 shows the typical magnetic interface circuit for the KSZ8061MNX/MNG.

FIGURE 10-1: TYPICAL MAGNETIC INTERFACE CIRCUIT

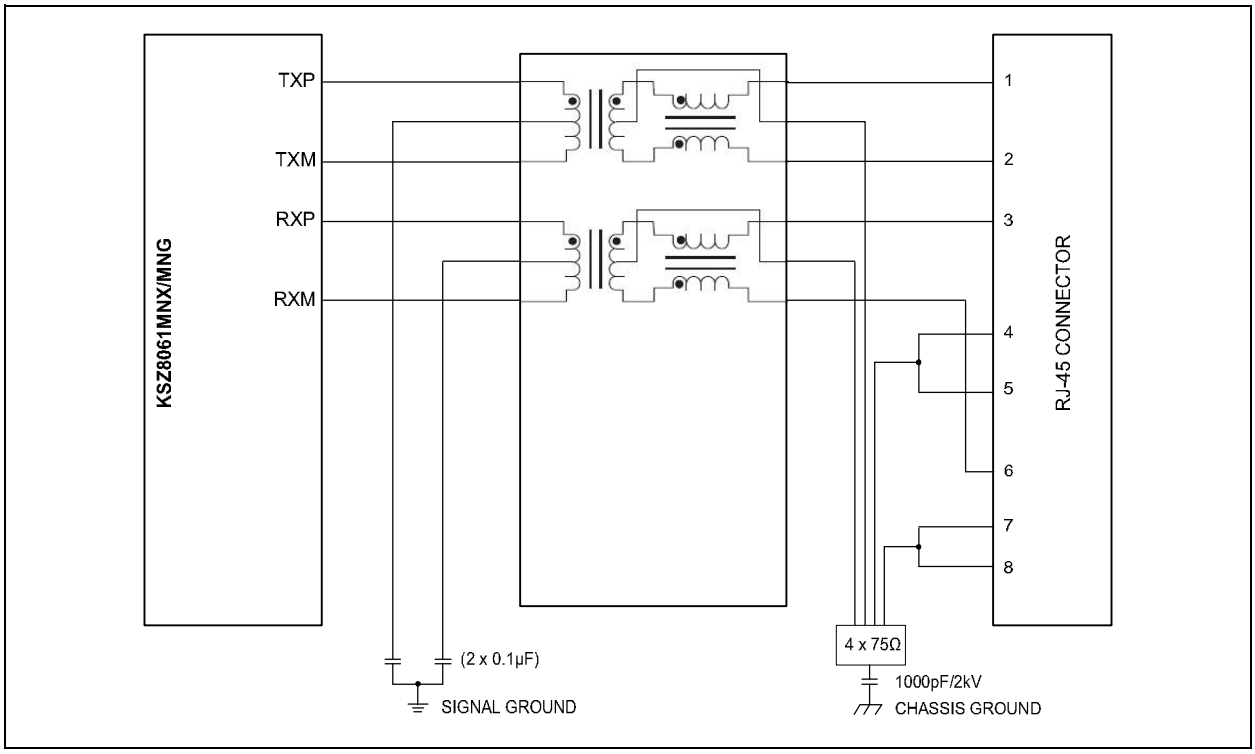

Table 10-1 lists recommended magnetic characteristics.

TABLE 10-1: MAGNETICS SELECTION CRITERIA

Parameter	Value	Test Condition
Turns ratio	1 CT : 1 CT	—
Open-circuit inductance (minimum)	350 µH	100 mV, 100 kHz, 8 mA
Insertion loss (typical)	–1.1 dB	100 kHz to 100 MHz
HIPOT (minimum)	1500 V_{rms}	—

11.0 PACKAGE OUTLINES

Note: For the most current package drawings, please see the Microchip Packaging Specification located at http://www.microchip.com/packaging.

FIGURE 11-1: 32-LEAD WQFN 5 MM X 5 MM PACKAGE

TITLE
32 LEAD WQFN 5x5mm PACKAGE (Wettable Flank) OUTLINE & RECOMMENDED LAND PATTERN

DRAWING #	WQFN55-32LD-PL-1	UNIT	MM

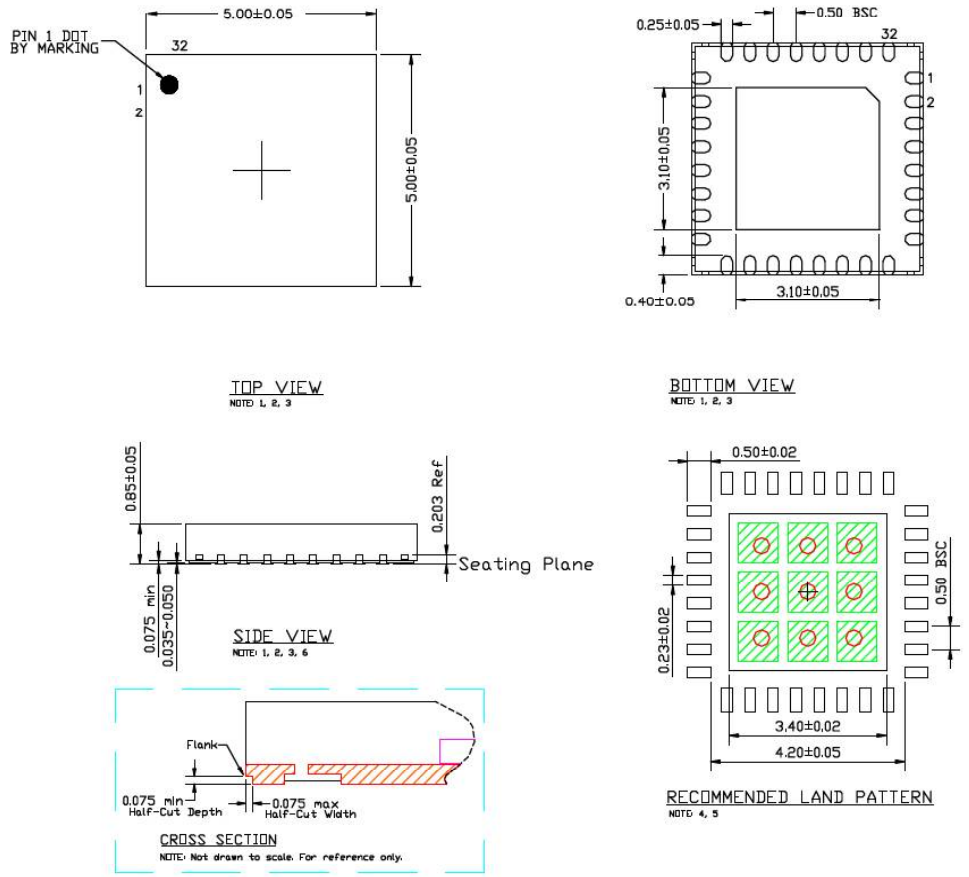

NOTE:
1. MAX PACKAGE WARPAGE IS 0.05mm.
2. MAX ALLOWABLE BURR IS 0.076mm IN ALL DIRECTIONS.
3. PIN #1 IS ON TOP WILL BE LASER MARKED.
4. RED CIRCLES IN LAND PATTERN INDICATES THERMAL VIA. SIZE SHOULD BE 0.30-0.35mm IN DIAMETER, 1.00mm PITCH & SHOULD BE CONNECTED TO GND FOR MAX THERMAL PERFORMANCE.
5. GREEN RECTANGLES (SHADED AREA) REPRESENT SOLDER STENCIL OPENING ON EXPOSED PAD AREA. RECOMMENDED SIZE IS 0.87x0.87mm, 1.07mm PITCH.
6. "W" IN WQFN IS WETTABLE FLANK PACKAGE.

© 2016-2019 Microchip Technology Inc.

Note: For the most current package drawings, please see the Microchip Packaging Specification located at http://www.microchip.com/packaging.

FIGURE 11-2: 32-LEAD QFN 5 MM X 5 MM PACKAGE

TITLE
32 LEAD QFN 5x5mm PACKAGE OUTLINE & RECOMMENDED LAND PATTERN

DRAWING #	QFN55-32LD-PL-1	UNIT	MM

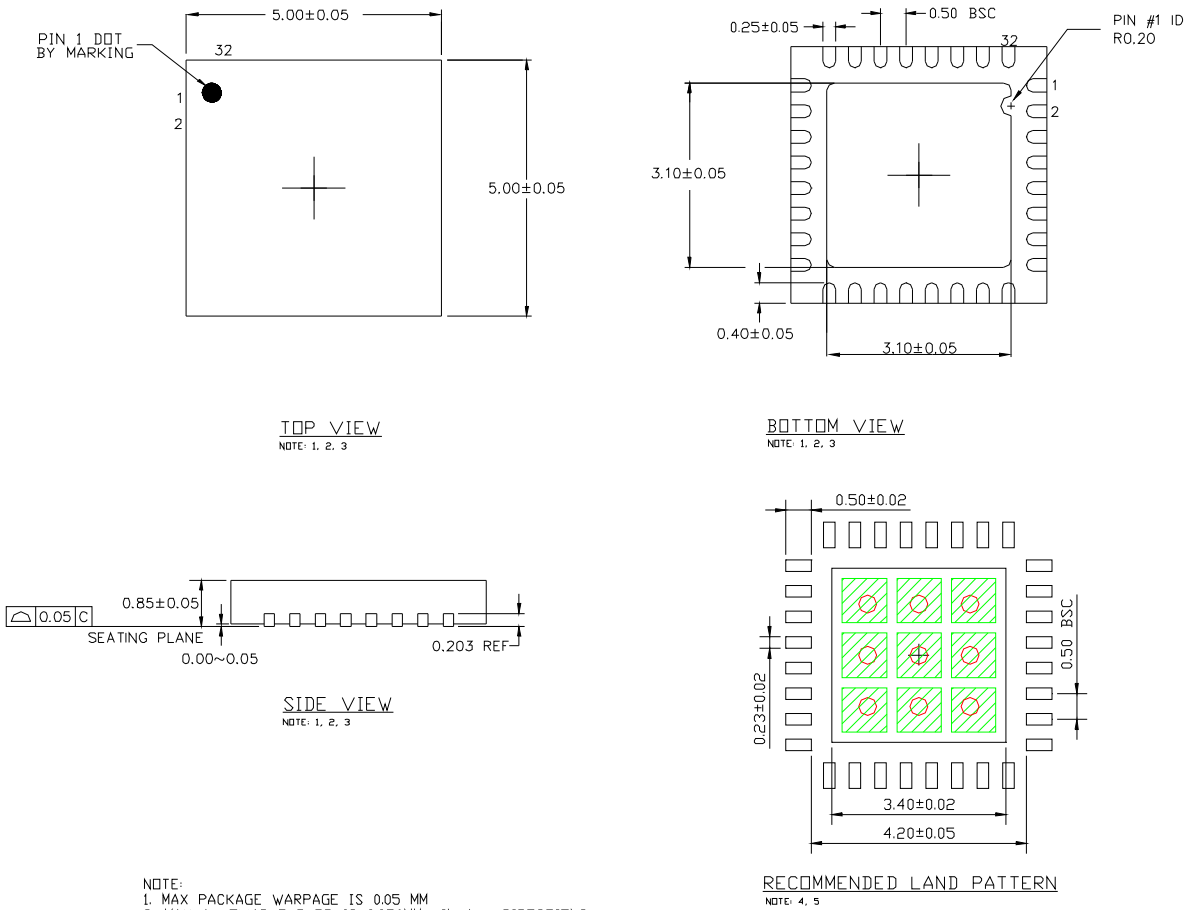

NOTE:
1. MAX PACKAGE WARPAGE IS 0.05 MM
2. MAX ALLOWABLE BURR IS 0.076MM IN ALL DIRECTIONS
3. PIN #1 IS ON TOP WILL BE LASER MARKED
4. RED CIRCLE IN LAND PATTERN INDICATE THERMAL VIA. SIZE SHOULD BE 0.30-0.35M IN DIAMETER AND SHOULD BE CONNECTED TO GND FOR MAX THERMAL PERFORMANCE
5. GREEN RECTANGLES (SHADED AREA) INDICATE SOLDER STENCIL OPENING ON EXPOSED PAD AREA. SIZE SHOULD BE 0.87x0.87 MM IN SIZE, 1.07 MM PITCH.

Note: For the most current package drawings, please see the Microchip Packaging Specification located at http://www.microchip.com/packaging.

FIGURE 11-3: 48-LEAD QFN 7 MM X 7 MM PACKAGE

48 LEAD QFN 7x7mm PACKAGE OUTLINE & RECOMMENDED LAND PATTERN

DRAWING #	QFN77-48LD-PL-2	UNIT	MM

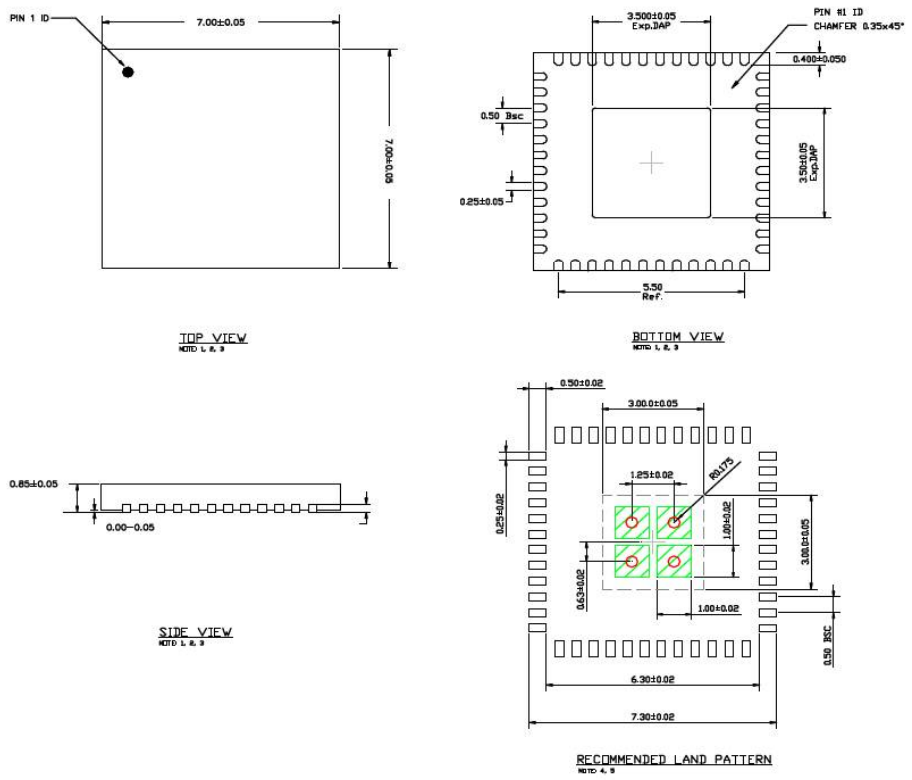

NOTE:
1. MAX PACKAGE WARPAGE IS 0.05mm
2. MAX ALLOWABLE BURR IS 0.076mm IN ALL DIRECTIONS.
3. PIN #1 IS ON TOP WILL BE LASER MARKED
4. RED CIRCLE IN LAND PATTERN INDICATES THERMAL VIA. SIZE SHOULD BE 0.30-0.35mm IN DIAMETER AND SHOULD BE CONNECTED TO GND FOR MAX THERMAL PERFORMANCE. PITCH is 1.25mm.
5. GREEN RECTANGLES (SHADED AREA) REPRESENT SOLDER STENCIL OPENING ON EXPOSED PAD AREA. RECOMMENDED SIZE IS 1.00mm x 1.00mm, SPACING IS 0.25mm, PITCH is 1.25mm.

© 2016-2019 Microchip Technology Inc.

APPENDIX A: DATA SHEET REVISION HISTORY

TABLE A-1: REVISION HISTORY

Revision	Section/Figure/Entry	Correction
DS00002038D (01-16-19)	Table 4-3, "Standard Register Description"	Updated the description of the following: • Address 18.10, Register 18h - Expanded Control • Address 1F.11, Register 1Fh - PHY Control 2 • Address 1C.4, Register 1Ch - Function Control
	Table 9-1, "25-MHz Crystal/Reference Clock Selection Criteria"	Added a new row for Crystal Drive Level.
	Figure 1-1, "System Block Diagram"	Corrected the arrows for INTRP and SIGNAL DETECT lines.
	LinkMD® Cable Diagnostics on page 24	Updated the step 4 under steps for short cables, and the step 3 under steps for long cables. Added a new paragraph.
	LinkMD®+ Enhanced Diagnostics: Receive Signal Quality Indicator on page 24	Updated the last sentence of the first paragraph to say “environmental EM noise.”
	Reference Clock — Connection and Selection on page 56	Updated the first paragraph.
	Magnetic – Connection and Selection on page 57	Added this section.
DS00002038C (12-21-17)	Table 4-3, “Standard Register Description,” on page 31	Added a note to Register 12h - AFE Control 1 Register.
	FIGURE 2-1: 32-QFN or WQFN KSZ8061MNX Pin Assignment (Top View) on page 5	Updated the figure.
	All	Minor text changes throughout.
DS00002038B (01-23-17)	All	Sales listing and cover pages updated. Minor text changes throughout.
	Highlights on page 1	Updated Quiet WIRE description; added AEC-Q100 Grade 2 Automotive Qualified.
	Section 3.1.8, "Auto-Negotiation," on page 14	Removed note.
	Section 3.3, "Fast Link-Up," on page 15	Updated last paragraph
	Table 4-1, “Standard Registers,” on page 30 and Table 4-3, “Standard Register Description,” on page 31	AFE Control 1 register information added.
	Section 5.2, "Operating Conditions**," on page 43	Updated minor formatting issue.
	FIGURE 11-2: 32-Lead QFN 5 mm x 5 mm Package on page 59	Image replaced.
	Product Identification System on page 64	Removed GMII references. Removed note.
DS00002038A (8-5-16)	All	Initial conversion of Micrel data sheet KSZ8061MNX/MNG to Microchip data sheet DS00002038A. Minor text changes throughout.

© 2016-2019 Microchip Technology Inc.

THE MICROCHIP WEB SITE

Microchip provides online support via our WWW site at www.microchip.com. This web site is used as a means to make files and information easily available to customers. Accessible by using your favorite Internet browser, the web site contains the following information:

- **Product Support** – Data sheets and errata, application notes and sample programs, design resources, user's guides and hardware support documents, latest software releases and archived software
- **General Technical Support** – Frequently Asked Questions (FAQ), technical support requests, online discussion groups, Microchip consultant program member listing
- **Business of Microchip** – Product selector and ordering guides, latest Microchip press releases, listing of seminars and events, listings of Microchip sales offices, distributors and factory representatives

CUSTOMER CHANGE NOTIFICATION SERVICE

Microchip's customer notification service helps keep customers current on Microchip products. Subscribers will receive e-mail notification whenever there are changes, updates, revisions or errata related to a specified product family or development tool of interest.

To register, access the Microchip web site at www.microchip.com. Under "Support", click on "Customer Change Notification" and follow the registration instructions.

CUSTOMER SUPPORT

Users of Microchip products can receive assistance through several channels:

- Distributor or Representative
- Local Sales Office
- Field Application Engineer (FAE)
- Technical Support

Customers should contact their distributor, representative or Field Application Engineer (FAE) for support. Local sales offices are also available to help customers. A listing of sales offices and locations is included in the back of this document.

Technical support is available through the web site at: http://microchip.com/support

PRODUCT IDENTIFICATION SYSTEM

To order or obtain information, e.g., on pricing or delivery, refer to the factory or the listed sales office.

PART NO.	X	XX	X
Device	Interface	Package	Temperature

Device:	KSZ8061
Interface:	M = MII
Package:	NX = 32-pin QFN or WQFN NG = 48-pin QFN
Temperature:	I = –40°C to +85°C (Industrial) V = –40°C to +105°C (Automotive-Qualified Extended) W = –40°C to +105°C (Industrial Extended)

Examples:

a) KSZ8061MNXI
MII Interface
32-pin QFN (Pb-Free)
Industrial Temperature

b) KSZ8061MNXV(1)
MII Interface
32-pin WQFN (Pb-Free)
AEC-Q100 Automotive Qualified Extended Temperature

c) KSZ8061MNGW
MII Interface
48-pin QFN (Pb-Free)
Industrial Extended Temperature

© 2016-2019 Microchip Technology Inc.

Note the following details of the code protection feature on Microchip devices:

- Microchip products meet the specification contained in their particular Microchip Data Sheet.
- Microchip believes that its family of products is one of the most secure families of its kind on the market today, when used in the intended manner and under normal conditions.
- There are dishonest and possibly illegal methods used to breach the code protection feature. All of these methods, to our knowledge, require using the Microchip products in a manner outside the operating specifications contained in Microchip's Data Sheets. Most likely, the person doing so is engaged in theft of intellectual property.
- Microchip is willing to work with the customer who is concerned about the integrity of their code.
- Neither Microchip nor any other semiconductor manufacturer can guarantee the security of their code. Code protection does not mean that we are guaranteeing the product as "unbreakable."

Code protection is constantly evolving. We at Microchip are committed to continuously improving the code protection features of our products. Attempts to break Microchip's code protection feature may be a violation of the Digital Millennium Copyright Act. If such acts allow unauthorized access to your software or other copyrighted work, you may have a right to sue for relief under that Act.

Information contained in this publication regarding device applications and the like is provided only for your convenience and may be superseded by updates. It is your responsibility to ensure that your application meets with your specifications. MICROCHIP MAKES NO REPRESENTATIONS OR WARRANTIES OF ANY KIND WHETHER EXPRESS OR IMPLIED, WRITTEN OR ORAL, STATUTORY OR OTHERWISE, RELATED TO THE INFORMATION, INCLUDING BUT NOT LIMITED TO ITS CONDITION, QUALITY, PERFORMANCE, MERCHANTABILITY OR FITNESS FOR PURPOSE**.** Microchip disclaims all liability arising from this information and its use. Use of Microchip devices in life support and/or safety applications is entirely at the buyer's risk, and the buyer agrees to defend, indemnify and hold harmless Microchip from any and all damages, claims, suits, or expenses resulting from such use. No licenses are conveyed, implicitly or otherwise, under any Microchip intellectual property rights unless otherwise stated.

Trademarks

The Microchip name and logo, the Microchip logo, AnyRate, AVR, AVR logo, AVR Freaks, BitCloud, chipKIT, chipKIT logo, CryptoMemory, CryptoRF, dsPIC, FlashFlex, flexPWR, Heldo, JukeBlox, KeeLoq, Kleer, LANCheck, LinkMD, maXStylus, maXTouch, MediaLB, megaAVR, MOST, MOST logo, MPLAB, OptoLyzer, PIC, picoPower, PICSTART, PIC32 logo, Prochip Designer, QTouch, SAM-BA, SpyNIC, SST, SST Logo, SuperFlash, tinyAVR, UNI/O, and XMEGA are registered trademarks of Microchip Technology Incorporated in the U.S.A. and other countries.

ClockWorks, The Embedded Control Solutions Company, EtherSynch, Hyper Speed Control, HyperLight Load, IntelliMOS, mTouch, Precision Edge, and Quiet-Wire are registered trademarks of Microchip Technology Incorporated in the U.S.A.

Adjacent Key Suppression, AKS, Analog-for-the-Digital Age, Any Capacitor, AnyIn, AnyOut, BodyCom, CodeGuard, CryptoAuthentication, CryptoAutomotive, CryptoCompanion, CryptoController, dsPICDEM, dsPICDEM.net, Dynamic Average Matching, DAM, ECAN, EtherGREEN, In-Circuit Serial Programming, ICSP, INICnet, Inter-Chip Connectivity, JitterBlocker, KleerNet, KleerNet logo, memBrain, Mindi, MiWi, motorBench, MPASM, MPF, MPLAB Certified logo, MPLIB, MPLINK, MultiTRAK, NetDetach, Omniscient Code Generation, PICDEM, PICDEM.net, PICkit, PICtail, PowerSmart, PureSilicon, QMatrix, REAL ICE, Ripple Blocker, SAM-ICE, Serial Quad I/O, SMART-I.S., SQI, SuperSwitcher, SuperSwitcher II, Total Endurance, TSHARC, USBCheck, VariSense, ViewSpan, WiperLock, Wireless DNA, and ZENA are trademarks of Microchip Technology Incorporated in the U.S.A. and other countries.

SQTP is a service mark of Microchip Technology Incorporated in the U.S.A.

Silicon Storage Technology is a registered trademark of Microchip Technology Inc. in other countries.

GestIC is a registered trademark of Microchip Technology Germany II GmbH & Co. KG, a subsidiary of Microchip Technology Inc., in other countries.

All other trademarks mentioned herein are property of their respective companies.

© 2016-2019, Microchip Technology Incorporated, All Rights Reserved.

ISBN: 978-1-5224-4056-7

QUALITY MANAGEMENT SYSTEM CERTIFIED BY DNV

ISO/TS 16949

Microchip received ISO/TS-16949:2009 certification for its worldwide headquarters, design and wafer fabrication facilities in Chandler and Tempe, Arizona; Gresham, Oregon and design centers in California and India. The Company's quality system processes and procedures are for its PIC® MCUs and dsPIC® DSCs, KEELOQ® code hopping devices, Serial EEPROMs, microperipherals, nonvolatile memory and analog products. In addition, Microchip's quality system for the design and manufacture of development systems is ISO 9001:2000 certified.

Worldwide Sales and Service

AMERICAS

Corporate Office
2355 West Chandler Blvd.
Chandler, AZ 85224-6199
Tel: 480-792-7200
Fax: 480-792-7277
Technical Support:
http://www.microchip.com/support
Web Address:
www.microchip.com

Atlanta
Duluth, GA
Tel: 678-957-9614
Fax: 678-957-1455

Austin, TX
Tel: 512-257-3370

Boston
Westborough, MA
Tel: 774-760-0087
Fax: 774-760-0088

Chicago
Itasca, IL
Tel: 630-285-0071
Fax: 630-285-0075

Dallas
Addison, TX
Tel: 972-818-7423
Fax: 972-818-2924

Detroit
Novi, MI
Tel: 248-848-4000

Houston, TX
Tel: 281-894-5983

Indianapolis
Noblesville, IN
Tel: 317-773-8323
Fax: 317-773-5453
Tel: 317-536-2380

Los Angeles
Mission Viejo, CA
Tel: 949-462-9523
Fax: 949-462-9608
Tel: 951-273-7800

Raleigh, NC
Tel: 919-844-7510

New York, NY
Tel: 631-435-6000

San Jose, CA
Tel: 408-735-9110
Tel: 408-436-4270

Canada - Toronto
Tel: 905-695-1980
Fax: 905-695-2078

ASIA/PACIFIC

Australia - Sydney
Tel: 61-2-9868-6733

China - Beijing
Tel: 86-10-8569-7000

China - Chengdu
Tel: 86-28-8665-5511

China - Chongqing
Tel: 86-23-8980-9588

China - Dongguan
Tel: 86-769-8702-9880

China - Guangzhou
Tel: 86-20-8755-8029

China - Hangzhou
Tel: 86-571-8792-8115

China - Hong Kong SAR
Tel: 852-2943-5100

China - Nanjing
Tel: 86-25-8473-2460

China - Qingdao
Tel: 86-532-8502-7355

China - Shanghai
Tel: 86-21-3326-8000

China - Shenyang
Tel: 86-24-2334-2829

China - Shenzhen
Tel: 86-755-8864-2200

China - Suzhou
Tel: 86-186-6233-1526

China - Wuhan
Tel: 86-27-5980-5300

China - Xian
Tel: 86-29-8833-7252

China - Xiamen
Tel: 86-592-2388138

China - Zhuhai
Tel: 86-756-3210040

ASIA/PACIFIC

India - Bangalore
Tel: 91-80-3090-4444

India - New Delhi
Tel: 91-11-4160-8631

India - Pune
Tel: 91-20-4121-0141

Japan - Osaka
Tel: 81-6-6152-7160

Japan - Tokyo
Tel: 81-3-6880- 3770

Korea - Daegu
Tel: 82-53-744-4301

Korea - Seoul
Tel: 82-2-554-7200

Malaysia - Kuala Lumpur
Tel: 60-3-7651-7906

Malaysia - Penang
Tel: 60-4-227-8870

Philippines - Manila
Tel: 63-2-634-9065

Singapore
Tel: 65-6334-8870

Taiwan - Hsin Chu
Tel: 886-3-577-8366

Taiwan - Kaohsiung
Tel: 886-7-213-7830

Taiwan - Taipei
Tel: 886-2-2508-8600

Thailand - Bangkok
Tel: 66-2-694-1351

Vietnam - Ho Chi Minh
Tel: 84-28-5448-2100

EUROPE

Austria - Wels
Tel: 43-7242-2244-39
Fax: 43-7242-2244-393

Denmark - Copenhagen
Tel: 45-4450-2828
Fax: 45-4485-2829

Finland - Espoo
Tel: 358-9-4520-820

France - Paris
Tel: 33-1-69-53-63-20
Fax: 33-1-69-30-90-79

Germany - Garching
Tel: 49-8931-9700

Germany - Haan
Tel: 49-2129-3766400

Germany - Heilbronn
Tel: 49-7131-67-3636

Germany - Karlsruhe
Tel: 49-721-625370

Germany - Munich
Tel: 49-89-627-144-0
Fax: 49-89-627-144-44

Germany - Rosenheim
Tel: 49-8031-354-560

Israel - Ra'anana
Tel: 972-9-744-7705

Italy - Milan
Tel: 39-0331-742611
Fax: 39-0331-466781

Italy - Padova
Tel: 39-049-7625286

Netherlands - Drunen
Tel: 31-416-690399
Fax: 31-416-690340

Norway - Trondheim
Tel: 47-7288-4388

Poland - Warsaw
Tel: 48-22-3325737

Romania - Bucharest
Tel: 40-21-407-87-50

Spain - Madrid
Tel: 34-91-708-08-90
Fax: 34-91-708-08-91

Sweden - Gothenberg
Tel: 46-31-704-60-40

Sweden - Stockholm
Tel: 46-8-5090-4654

UK - Wokingham
Tel: 44-118-921-5800
Fax: 44-118-921-5820

© 2016-2019 Microchip Technology Inc.

SYST-16IAPK635 - Data Sheet - KSZ8061MNX/MNG 10BASE-T/100 BASE-TX Physical Layer Transceiver

Affected Catalog Part Numbers(CPN)

KSZ8061MNGW
KSZ8061MNGW-TR
KSZ8061MNX-EVAL
KSZ8061MNXI
KSZ8061MNXI-TR
KSZ8061MNXV
KSZ8061MNXV-TR
KSZ8061MNXV-TRV01
KSZ8061MNXV-TRV02
KSZ8061MNXV-V03
KSZ8061MNXV-V04