Product Change Notification - SYST-18KTST181

Date:

19 Dec 2018

Product Category:

Memory

Affected CPNs:

Notification subject:

Data Sheet - 24AA01/24LC01B/24FC01 Data Sheet

Notification text:

SYST-18KTST181

Microchip has released a new DeviceDoc for the 24AA01/24LC01B/24FC01 Data Sheet of devices. If you are using one of these devices please read the document located at 24AA01/24LC01B/24FC01 Data Sheet.

Data Sheet - 24AA01/24LC01B/24FC01 Data Sheet

Notification Status: Final

Description of Change: 1) Added the 24FC01 device.

Impacts to Data Sheet: None

Reason for Change: To Improve Manufacturability

Change Implementation Status: Complete

Date Document Changes Effective: 19 Dec 2018

NOTE: Please be advised that this is a change to the document only the product has not been changed.

Markings to Distinguish Revised from Unrevised Devices: N/A

Attachment(s):

24AA01/24LC01B/24FC01 Data Sheet

Please contact your local Microchip sales office with questions or concerns regarding this notification.

Terms and Conditions:

If you wish to receive Microchip PCNs via email please register for our PCN email service at our PCN home page select register then fill in the required fields. You will find instructions about registering for Microchips PCN email service in the PCN FAQ section.
If you wish to change your PCN profile, including opt out, please go to the PCN home page select login and sign into your myMicrochip account. Select a profile option from the left navigation bar and make the applicable selections.

24AA01/24LC01B/24FC01

1K I²C Serial EEPROM

Device Selection Table

Part Number	Vcc Range	Max. Clock Frequency	Temp. Ranges	Available Packages
24AA01	1.7V-5.5V	400 kHz(1)	I	P, SN, MS, ST, MC, LT, MNY, OT
24LC01B	2.5V-5.5V	400 kHz	I, E	P, SN, MS, ST, MC, LT, MNY, OT
24FC01	1.7V-5.5V	1 MHz	I, E	P, SN, MS, ST, MUY, OT

Note 1: 100 kHz for Vcc < 2.5V

Features

- Single Supply with Operation down to 1.7V for 24AAXX and 24FCXX Devices, 2.5V for 24LCXX Devices
- Low-Power CMOS Technology:
  - Read current 1 mA, maximum
  - Standby current 1 µA, maximum (I-temp.)
- 2-Wire Serial Interface, I²C Compatible
- Schmitt Trigger Inputs for Noise Suppression
- Output Slope Control to Eliminate Ground Bounce
- 100 kHz, 400 kHz and 1 MHz Compatibility
- Page Write Time: 5 ms, Maximum
- Self-Timed Erase/Write Cycle
- 8-Byte Page Write Buffer
- Hardware Write-Protect
- ESD Protection >4,000V
- More than 1 Million Erase/Write Cycles
- Data Retention >200 Years
- Factory Programming Available
- RoHS Compliant
- Temperature Ranges:
  - Industrial (I): -40°C to +85°C
  - Extended (E): -40°C to +125°C
- Automotive AEC-Q100 Qualified

Packages:

- 8-Lead DFN, 8-Lead MSOP, 8-Lead PDIP, 8-Lead SOIC, 8-Lead TDFN, 8-Lead TSSOP, 8-Lead UDFN, 5-Lead SOT-23 and 5-Lead SC-70

Description

The Microchip Technology Inc. 24XX01(1) is a 1 Kbit Electrically Erasable PROM. The device is organized as one block of 128 x 8-bit memory with a 2-wire serial interface. Its low-voltage design permits operation down to 1.7V with standby and active currents of only 1 µA and 1 mA, respectively. The 24XX01 also has a page write capability for up to 8 bytes of data.

Note 1: 24XX01 is used in this document as a generic part number for the 24AA01/24LC01B/24FC01 devices.

Package Types

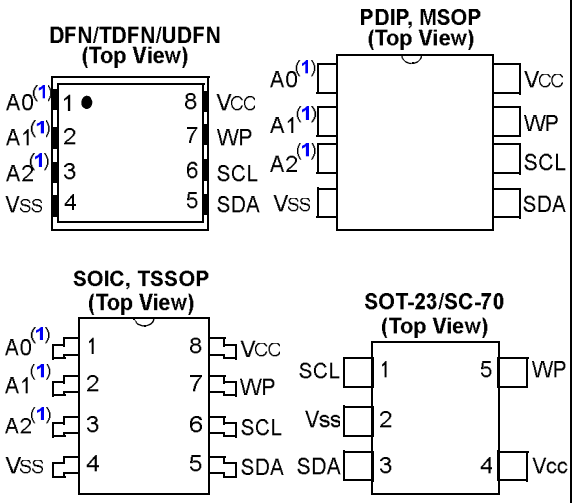

Note 1: Pins A0, A1 and A2 are not used by the 24XX01 (no internal connections).

© 2009-2018 Microchip Technology Inc.

Block Diagram

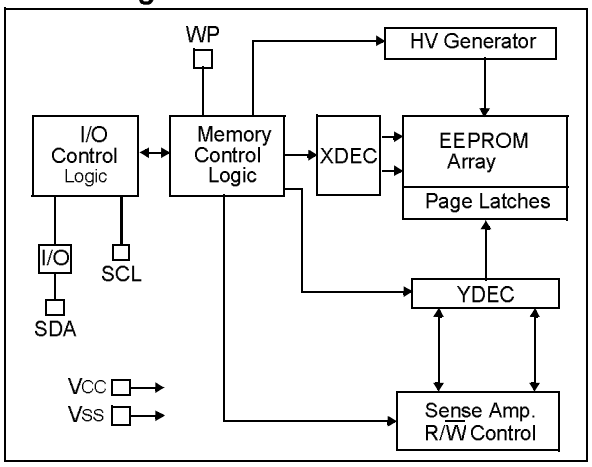

© 2009-2018 Microchip Technology Inc.

1.0 ELECTRICAL CHARACTERISTICS

Absolute Maximum Ratings (†)

Vcc.....6.5V

All inputs and outputs w.r.t. Vss.....-0.3V to Vcc +1.0V

Storage temperature.....-65°C to +150°C

Ambient temperature with power applied.....-40°C to +125°C

ESD protection on all pins.....≥4 kV

† NOTICE: Stresses above those listed under "Absolute Maximum Ratings" may cause permanent damage to the device. This is a stress rating only and functional operation of the device at those or any other conditions above those indicated in the operational listings of this specification is not implied. Exposure to maximum rating conditions for extended periods may affect device reliability.

TABLE 1-1: DC CHARACTERISTICS

DC CHARACTERISTICS			Industrial (I): TA = -40°C to +85°C, Vcc = +1.7V to +5.5V Extended (E): TA = -40°C to +125°C, Vcc = +2.5V to +5.5V (24LC01B) Extended (E): TA = -40°C to +125°C, Vcc = +1.7V to +5.5V (24FC01)				
Param. No.	**Symbol**	**Characteristic**	**Min.**	**Typ.**	**Max.**	**Units**	**Conditions**
D1	VIH	High-Level Input Voltage	0.7 Vcc	—	—	V	
D2	VIL	Low-Level Input Voltage	—	—	0.3 Vcc	V	
D3	VHYS	Hysteresis of Schmitt Trigger Inputs	0.05 Vcc	—	—	V	(Note)
D4	VOL	Low-Level Output Voltage	—	—	0.40	V	IOL = 3.0 mA, Vcc = 2.5V
D5	ILI	Input Leakage Current	—	—	±1	µA	VIN = Vss or Vcc
D6	ILO	Output Leakage Current	—	—	±1	µA	VOUT = Vss or Vcc
D7	CIN, COUT	Pin Capacitance (all inputs/outputs)	—	—	10	pF	Vcc = 5.0V (Note) TA = 25°C, FCLK = 1 MHz
D8	ICCWRITE	Operating Current	—	—	3	mA	Vcc = 5.5V, SCL = 400 kHz
D9	ICCREAD		—	—	1	mA	Vcc = 5.5V, SCL = 400 kHz
D10	ICCS	Standby Current	—	—	1	µA	SDA = SCL = Vcc WP = V_{SS}, I-Temp.
			—	—	3	µA	SDA = SCL = VDD WP = V_{SS}, E-Temp. (**24FC01**)
			—	—	5	µA	SDA = SCL = Vcc WP = V_{SS}, E-Temp. (**24LC01B**)

Note: This parameter is periodically sampled and not 100% tested.

TABLE 1-2 AC CHARACTERISTICS

AC CHARACTERISTICS			Industrial (I): TA = -40°C to +85°C, VCC = +1.7V to +5.5V Extended (E): TA = -40°C to +125°C, VCC = +2.5V to +5.5V (24LC01B) Extended (E): TA = -40°C to +125°C, VCC = +1.7V to +5.5V (24FC01)				
Param. No.	**Symbol**	**Characteristic**	**Min.**	**Typ.**	**Max.**	**Units**	**Conditions**
1	FCLK	Clock Frequency	—	—	400	kHz	2.5V ≤ VCC ≤ 5.5V
			—	—	100	kHz	1.7V ≤ VCC < 2.5V (**24AA01**)
			—	—	1000	kHz	1.7V ≤ VCC ≤ 5.5V (**24FC01**)
2	THIGH	Clock High Time	600	—	—	ns	2.5V ≤ VCC ≤ 5.5V
			4000	—	—	ns	1.7V ≤ VCC < 2.5V (**24AA01**)
			260	—	—	ns	1.7V ≤ VCC ≤ 5.5V (**24FC01**)
3	TLOW	Clock Low Time	1300	—	—	ns	2.5V ≤ VCC ≤ 5.5V
			4700	—	—	ns	1.7V ≤ VCC < 2.5V (**24AA01**)
			500	—	—	ns	1.7V ≤ VCC ≤ 5.5V (**24FC01**)
4	TR	SDA and SCL Rise Time	—	—	300	ns	2.5V ≤ VCC ≤ 5.5V (**Note 1**)
			—	—	1000	ns	1.7V ≤ VCC < 2.5V (**24AA01**) (**Note 1**)
			—	—	1000	ns	1.7V ≤ VCC ≤ 5.5V (**24FC01**) (**Note 1**)
5	TF	SDA and SCL Fall Time	—	—	300	ns	(**Note 1**)
6	THD:STA	Start Condition Hold Time	600	—	—	ns	2.5V ≤ VCC ≤ 5.5V
			4000	—	—	ns	1.7V ≤ VCC < 2.5V (**24AA01**)
			250	—	—	ns	1.7V ≤ VCC ≤ 5.5V (**24FC01**)
7	TSU:STA	Start Condition Setup Time	600	—	—	ns	2.5V ≤ VCC ≤ 5.5V
			4700	—	—	ns	1.7V ≤ VCC < 2.5V (**24AA01**)
			250	—	—	ns	1.7V ≤ VCC ≤ 5.5V (**24FC01**)
8	THD:DAT	Data Input Hold Time	0	—	—	ns	(**Note 2**)
9	TSU:DAT	Data Input Setup Time	100	—	—	ns	2.5V ≤ VCC ≤ 5.5V
			250	—	—	ns	1.7V ≤ VCC < 2.5V (**24AA01**)
			50	—	—	ns	1.7V ≤ VCC ≤ 5.5V (**24FC01**)
10	TSU:STO	Stop Condition Setup Time	600	—	—	ns	2.5V ≤ VCC ≤ 5.5V
			4000	—	—	ns	1.7V ≤ VCC < 2.5V (**24AA01**)
			250	—	—	ns	1.7V ≤ VCC ≤ 5.5V (**24FC01**)
11	TSU:WP	WP Setup Time	0	—	—	ns	1.7V ≤ VCC ≤ 5.5V (**24FC01**)
12	THD:WP	WP Hold Time	1000	—	—	ns	1.7V ≤ VCC ≤ 5.5V (**24FC01**)
13	TAA	Output Valid from Clock	—	—	900	ns	2.5V ≤ VCC ≤ 5.5V (**Note 2**)
			—	—	3500	ns	1.7V ≤ VCC < 2.5V (**24AA01**) (**Note 2**)
			—	—	450	ns	1.7V ≤ VCC ≤ 5.5V (**24FC01**) (**Note 2**)

Note 1: Characterized but not 100% tested.

2: As a transmitter, the device must provide an internal minimum delay time to bridge the undefined region (minimum 300 ns) of the falling edge of SCL to avoid unintended generation of Start or Stop conditions.

3: CB = total capacitance of one bus line in pF.

4: This parameter is not tested but ensured by characterization. For endurance estimates in a specific application, please consult the Total Endurance™ Model which can be obtained from Microchip's website at www.microchip.com.

© 2009-2018 Microchip Technology Inc.

TABLE 1-2 AC CHARACTERISTICS (CONTINUED)

AC CHARACTERISTICS (Continued)			Industrial (I): TA = -40°C to +85°C, VCC = +1.7V to +5.5V Extended (E): TA = -40°C to +125°C, VCC = +2.5V to +5.5V (24LC01B) Extended (E): TA = -40°C to +125°C, VCC = +1.7V to +5.5V (24FC01)				
Param. No.	**Symbol**	**Characteristic**	**Min.**	**Typ.**	**Max.**	**Units**	**Conditions**
14	TBUF	Bus Free Time: The time the bus must be free before a new transmission can start	1300	—	—	ns	2.5V ≤ VCC ≤ 5.5V
			4700	—	—	ns	1.7V ≤ VCC < 2.5V (**24AA01**)
			500	—	—	ns	1.7V ≤ VCC ≤ 5.5V (**24FC01**)
15	TOF	Output Fall Time from VIH Minimum to VIL Maximum	20+0.1CB	—	250	ns	2.5V ≤ VCC ≤ 5.5V (**24LC01B**) (Notes 1 and 3)
			—	—	250	ns	1.7V ≤ VCC < 2.5V (**24AA01**) (Note 1)
16	TSP	Input Filter Spike Suppression (SDA and SCL pins)	—	—	50	ns	(Note 1)
17	TWC	Write Cycle Time (byte or page)	—	—	5	ms	
18		Endurance	1,000,000	—	—	cycles	25°C, 5.5V, Page Mode (Note 4)

Note 1: Characterized but not 100% tested.

2: As a transmitter, the device must provide an internal minimum delay time to bridge the undefined region (minimum 300 ns) of the falling edge of SCL to avoid unintended generation of Start or Stop conditions.

3: CB = total capacitance of one bus line in pF.

4: This parameter is not tested but ensured by characterization. For endurance estimates in a specific application, please consult the Total Endurance™ Model which can be obtained from Microchip's website at www.microchip.com.

FIGURE 1-1: BUS TIMING DATA

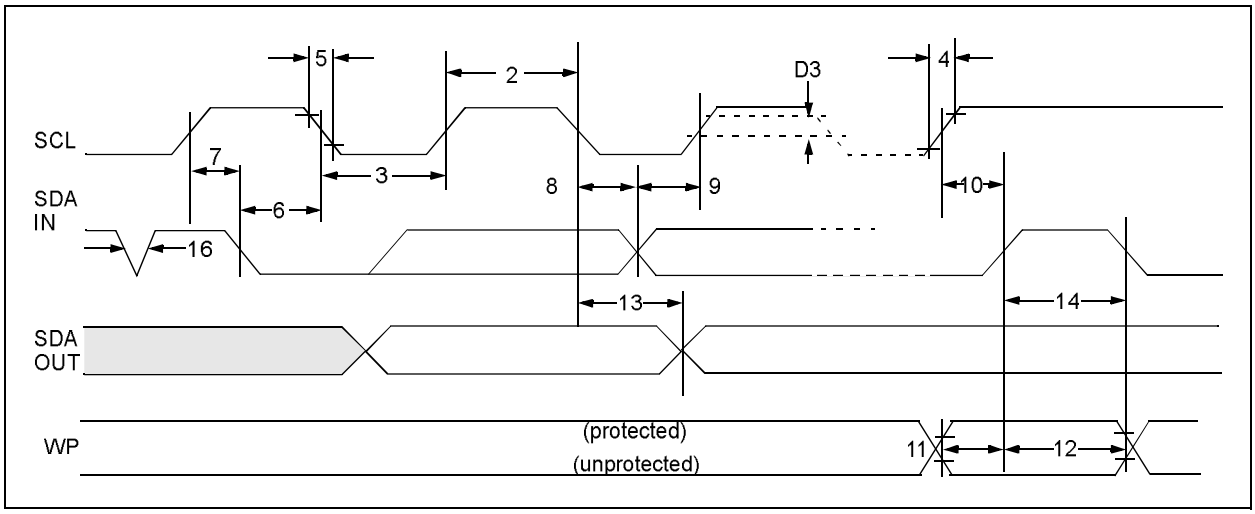

2.0 PIN DESCRIPTIONS

The descriptions of the pins are listed in Table 2-1.

TABLE 2-1: PIN FUNCTION TABLE

Name	DFN	MSOP	PDIP	SC-70	SOIC	SOT-23	TDFN	TSSOP	UDFN	Description
A0	1	1	1	—	1	—	1	1	1	Not Connected
A1	2	2	2	—	2	—	2	2	2	Not Connected
A2	3	3	3	—	3	—	3	3	3	Not Connected
Vss	4	4	4	2	4	2	4	4	4	Ground
SDA	5	5	5	3	5	3	5	5	5	Serial Address/Data I/O
SCL	6	6	6	1	6	1	6	6	6	Serial Clock
WP	7	7	7	5	7	5	7	7	7	Write-Protect Input
Vcc	8	8	8	4	8	4	8	8	8	Power Supply

2.1 A0, A1, A2

The A0, A1 and A2 pins are not used by the 24XX01. They may be left floating or tied to either Vss or Vcc.

2.2 Serial Address/Data Input/Output (SDA)

The SDA input is a bidirectional pin used to transfer addresses and data into and out of the device. Since it is an open-drain terminal, the SDA bus requires a pull-up resistor to Vcc (typical 10 kΩ for 100 kHz, 2 kΩ for 400 kHz and 1 MHz).

For normal data transfer, SDA is allowed to change only during SCL low. Changes during SCL high are reserved for indicating Start and Stop conditions.

2.3 Serial Clock (SCL)

The SCL input is used to synchronize the data transfer to and from the device.

2.4 Write-Protect (WP)

This pin must be connected to either Vss or Vcc.

If tied to Vss, normal memory operation is enabled (read/write the entire memory 00-7F).

If tied to Vcc, write operations are inhibited. The entire memory will be write-protected. Read operations are not affected.

© 2009-2018 Microchip Technology Inc.

3.0 FUNCTIONAL DESCRIPTION

The 24XX01 supports a bidirectional, 2-wire bus and data transmission protocol. A device that sends data onto the bus is defined as transmitter, while defining a device receiving data as a receiver. The bus has to be controlled by a master device which generates the Serial Clock (SCL), controls the bus access and generates the Start and Stop conditions, while the 24XX01 works as slave. Both master and slave can operate as transmitter or receiver, but the master device determines which mode is activated.

4.0 BUS CHARACTERISTICS

The following **bus protocol** has been defined:

- Data transfer may be initiated only when the bus is not busy.
- During data transfer, the data line must remain stable whenever the clock line is high. Changes in the data line while the clock line is high will be interpreted as a Start or Stop condition.

Accordingly, the following bus conditions have been defined (Figure 4-1).

4.1 Bus Not Busy (A)

Both data and clock lines remain high.

4.2 Start Data Transfer (B)

A high-to-low transition of the SDA line while the clock (SCL) is high determines a Start condition. All commands must be preceded by a Start condition.

4.3 Stop Data Transfer (C)

A low-to-high transition of the SDA line while the clock (SCL) is high determines a Stop condition. All operations must be ended with a Stop condition.

4.4 Data Valid (D)

The state of the data line represents valid data when, after a Start condition, the data line is stable for the duration of the high period of the clock signal.

The data on the line must be changed during the low period of the clock signal. There is one clock pulse per bit of data.

Each data transfer is initiated with a Start condition and terminated with a Stop condition. The number of data bytes transferred between the Start and Stop conditions is determined by the master device and is, theoretically, unlimited (although only the last eight will be stored when doing a write operation). When an overwrite does occur, it will replace data based on the first-in first-out (FIFO) principle.

4.5 Acknowledge

Each receiving device, when addressed, is obliged to generate an acknowledge after the reception of each byte. The master device must generate an extra clock pulse which is associated with this Acknowledge bit.

Note:	The 24XX01 does not generate any Acknowledge bits if an internal programming cycle is in progress.

The device that acknowledges has to pull down the SDA line during the acknowledge clock pulse in such a way that the SDA line is stable-low during the high period of the acknowledge-related clock pulse. Moreover, setup and hold times must be taken into account. During reads, a master must signal an end of data to the slave by not generating an Acknowledge bit on the last byte that has been clocked out of the slave. In this case, the slave (24XX01) will leave the data line high to enable the master to generate the Stop condition.

FIGURE 4-1: DATA TRANSFER SEQUENCE ON THE SERIAL BUS

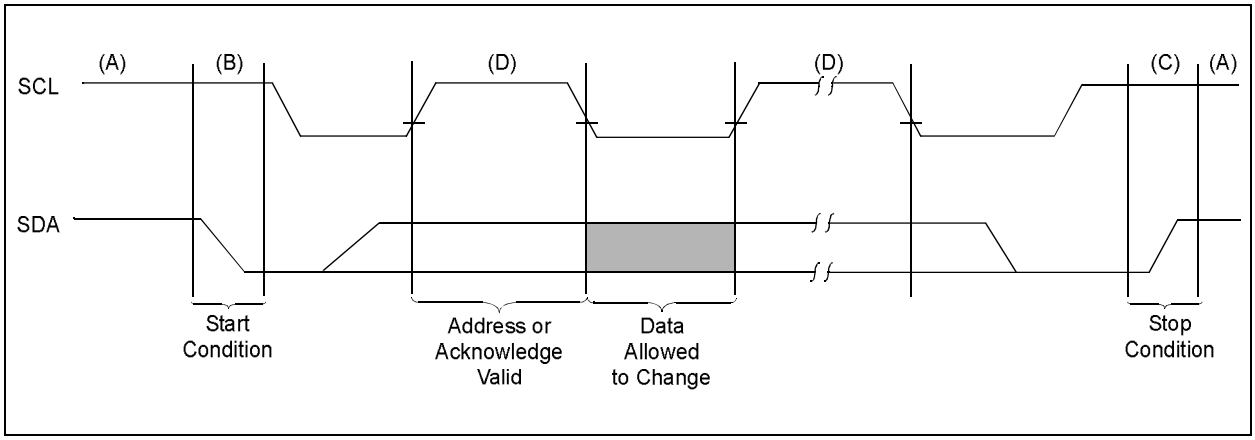

5.0 DEVICE ADDRESSING

A control byte is the first byte received following the Start condition from the master device. The control byte consists of a four-bit control code. For the 24XX01, this is set as '1010' binary for read and write operations. The next three bits of the control byte are "don't cares" for the 24XX01. The combination of the 4-bit control code and the next three bits are called the slave address.

The last bit of the control byte is the Read/$\overline{\text{Write}}$ (R/$\overline{\text{W}}$) bit and it defines the operation to be performed. When set to '1', a read operation is selected. When set to '0', a write operation is selected. Following the Start condition, the 24XX01 monitors the SDA bus, checking the device type identifier being transmitted. Upon receiving a valid slave address and the R/$\overline{\text{W}}$ bit, the slave device outputs an Acknowledge signal on the SDA line. Depending on the state of the R/$\overline{\text{W}}$ bit, the 24XX01 will select a read or write operation.

The next byte received defines the address of the first data byte within the selected block (Figure 5-2). Because only A6…A0 are used, the upper address bit is a "don't care".

Operation	Control Code	Block Select	R/$\overline{\text{W}}$
Read	1010	Block Address	1
Write	1010	Block Address	0

FIGURE 5-1: CONTROL BYTE ALLOCATION

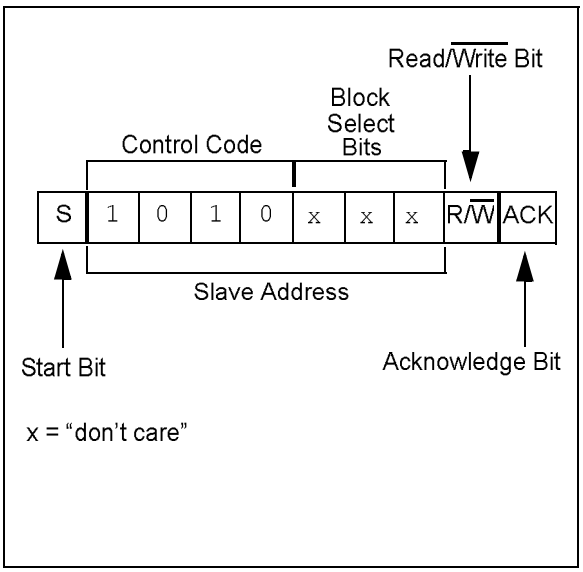

FIGURE 5-2: ADDRESS SEQUENCE BIT ASSIGNMENTS

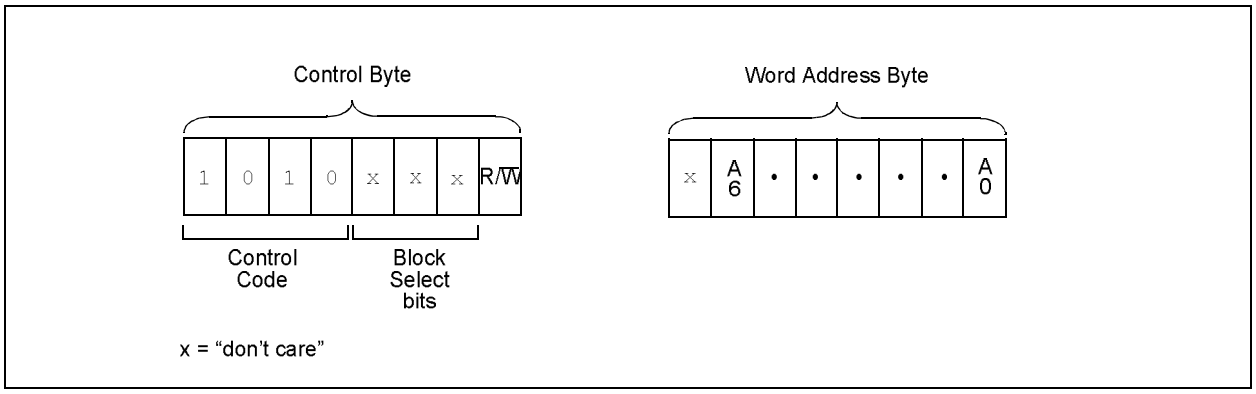

© 2009-2018 Microchip Technology Inc.

6.0 WRITE OPERATION

6.1 Byte Write

Following the Start condition from the master, the device code (4 bits), the block address (3 bits, “don’t cares”) and the R/$\overline{W}$ bit, which is a logic-low, is placed onto the bus by the master transmitter. This indicates to the addressed slave receiver that a byte with a word address will follow after it has generated an Acknowledge bit during the ninth clock cycle. Therefore, the next byte transmitted by the master is the word address and will be written into the Address Pointer of the 24XX01. After receiving another Acknowledge signal from the 24XX01, the master device will transmit the data word to be written into the addressed memory location. The 24XX01 acknowledges again and the master generates a Stop condition. This initiates the internal write cycle, and, during this time, the 24XX01 will not generate Acknowledge signals (Figure 6-1).

6.2 Page Write

The write control byte, word address and first data byte are transmitted to the 24XX01 in the same way as in a byte write. However, instead of generating a Stop condition, the master transmits up to 8 data bytes to the 24XX01, which are temporarily stored in the on-chip page buffer and will be written into the memory once the master has transmitted a Stop condition. Upon receipt of each word, the three lower-order Address Pointer bits, which form the byte counter, are internally incremented by one. The higher-order five bits of the word address remain constant. If the master should transmit more than eight words prior to generating the Stop condition, the Address Pointer will roll over and the previously received data will be overwritten. As with the byte write operation, once the Stop condition is received, an internal write cycle will begin (Figure 6-2).

Note:	Page write operations are limited to writing bytes within a single physical page **regardless** of the number of bytes actually being written. Physical page boundaries start at addresses that are integer multiples of the page buffer size (or ‘page size’) and end at addresses that are integer multiples of page size – 1. If a page write command attempts to write across a physical page boundary, the result is that the data wraps around to the beginning of the current page (overwriting data previously stored there), instead of being written to the next page, as might be expected. It is therefore necessary for the application software to prevent page write operations that would attempt to cross a page boundary.

6.3 Write Protection

The WP pin allows the user to write-protect the entire array (00-7F) when the pin is tied to Vcc. If tied to Vss, the write protection is disabled.

FIGURE 6-1: BYTE WRITE

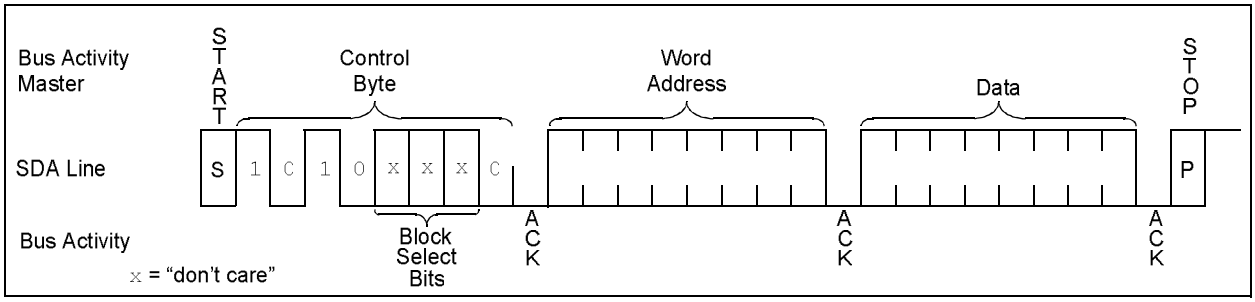

FIGURE 6-2: PAGE WRITE

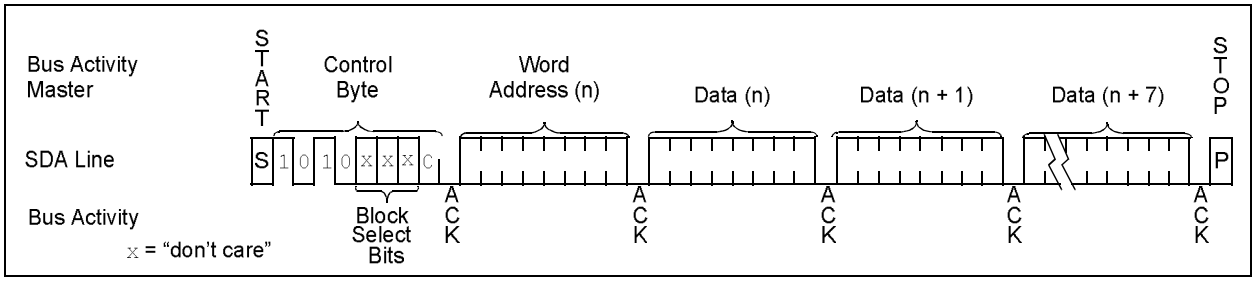

© 2009-2018 Microchip Technology Inc.

7.0 ACKNOWLEDGE POLLING

Since the device will not acknowledge during a write cycle, this can be used to determine when the cycle is complete (this feature can be used to maximize bus throughput). Once the Stop condition for a write command has been issued from the master, the device initiates the internally-timed write cycle. ACK polling can then be initiated immediately. This involves the master sending a Start condition followed by the control byte for a write command (R/$\overline{W}$ = 0). If the device is still busy with the write cycle, no ACK will be returned. If the cycle is complete, the device will return the ACK and the master can then proceed with the next read or write operation. See Figure 7-1 for a flow diagram of this operation.

FIGURE 7-1: ACKNOWLEDGE POLLING FLOW

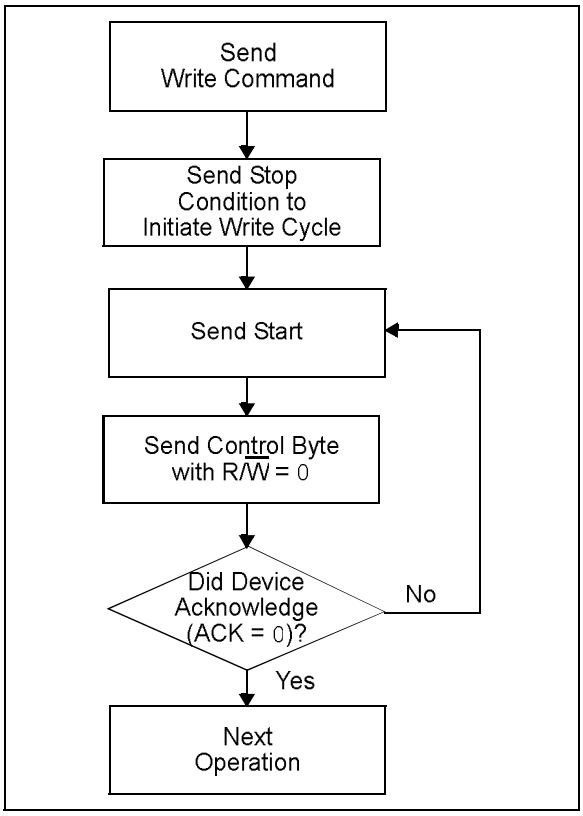

8.0 READ OPERATION

Read operations are initiated in the same way as write operations, with the exception that the R/$\overline{W}$ bit of the slave address is set to '1'. There are three basic types of read operations: current address read, random read and sequential read.

8.1 Current Address Read

The 24XX01 contains an Address Pointer that maintains the address of the last word accessed, internally incremented by one. Therefore, if the previous access (either a read or write operation) was to address n, the next current address read operation would access data from address n + 1. Upon receipt of the slave address with R/$\overline{W}$ bit set to '1', the 24XX01 issues an acknowledge and transmits the 8-bit data word. The master will not acknowledge the transfer, but does generate a Stop condition and the 24XX01 discontinues transmission (Figure 8-1).

8.2 Random Read

Random read operations allow the master to access any memory location in a random manner. To perform this type of read operation, the word address must first be set. This is accomplished by sending the word address to the 24XX01 as part of a write operation. Once the word address is sent, the master generates a Start condition following the acknowledge. This terminates the write operation, but not before the internal Address Pointer is set. The master then issues the control byte again, but with the R/$\overline{W}$ bit set to a '1'. The 24XX01 will then issue an acknowledge and transmits the 8-bit data word. The master will not acknowledge the transfer, but does generate a Stop condition and the 24XX01 discontinues transmission (Figure 8-2).

8.3 Sequential Read

Sequential reads are initiated in the same way as a random read, except that once the 24XX01 transmits the first data byte, the master issues an acknowledge (as opposed to a Stop condition in a random read). This directs the 24XX01 to transmit the next sequentially addressed 8-bit word (Figure 8-3).

To provide sequential reads the 24XX01 contains an internal Address Pointer which is incremented by one at the completion of each operation. This Address Pointer allows the entire memory contents to be serially read during one operation.

8.4 Noise Protection

The SCL and SDA inputs have Schmitt Trigger and filter circuits which suppress noise spikes to assure proper device operation even on a noisy bus.

FIGURE 8-1: CURRENT ADDRESS READ

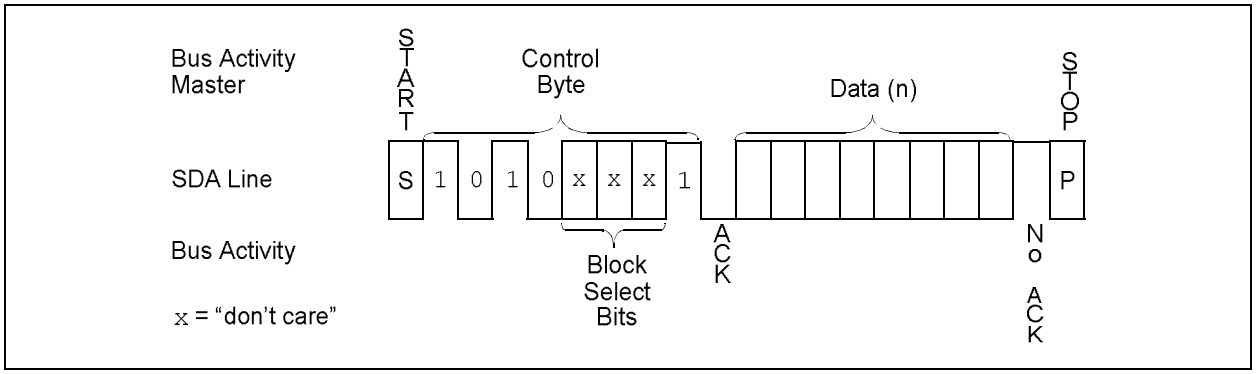

© 2009-2018 Microchip Technology Inc.

FIGURE 8-2: RANDOM READ

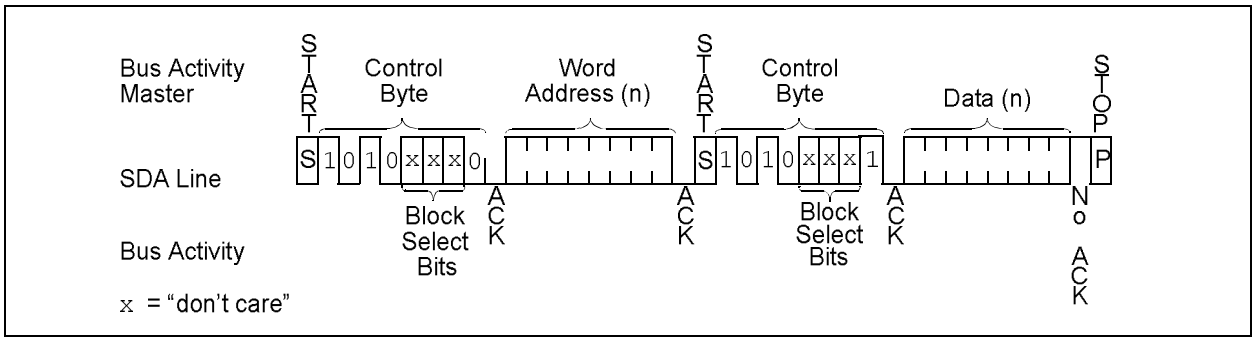

FIGURE 8-3: SEQUENTIAL READ

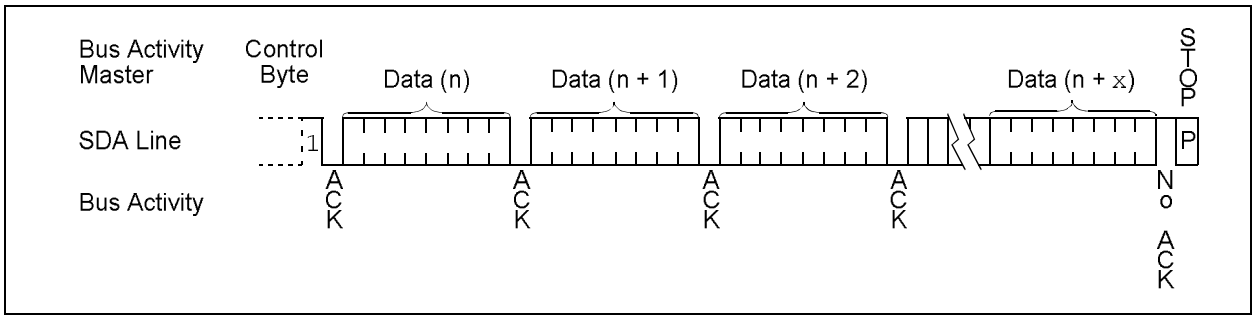

9.0 PACKAGING INFORMATION

9.1 Package Marking Information*

8-Lead 2x3 DFN

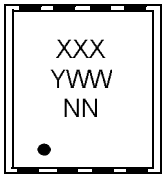

Example

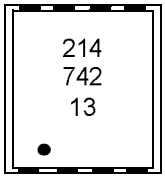

8-Lead MSOP

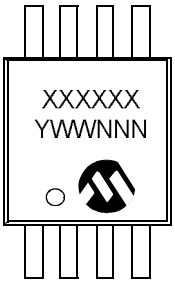

Example

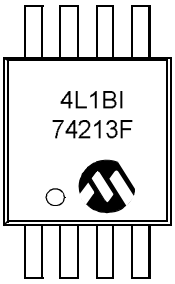

8-Lead PDIP (300 mil)

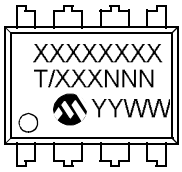

Example

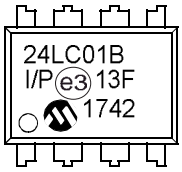

5-Lead SC-70

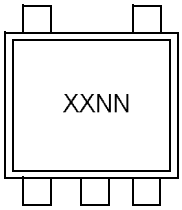

Example

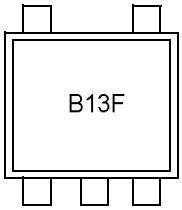

8-Lead SOIC (3.90 mm)

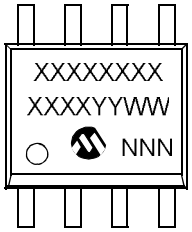

Example

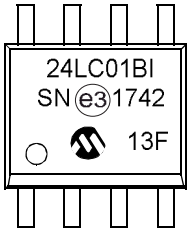

© 2009-2018 Microchip Technology Inc.

5-Lead SOT-23 (**1-Line Marking**)

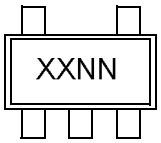

Example

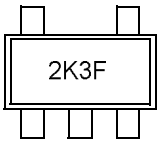

5-Lead SOT-23 (**2-Line Marking**)

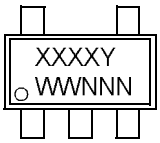

Example

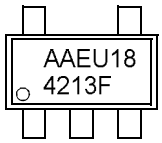

8-Lead 2x3 TDFN

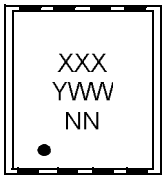

Example

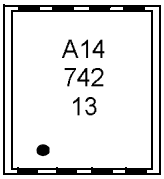

8-Lead TSSOP

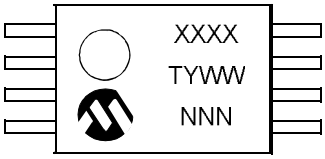

Example

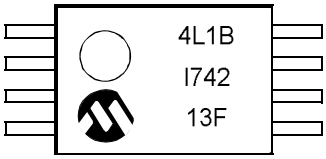

8-Lead 2x3 UDFN

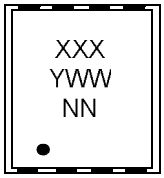

Example

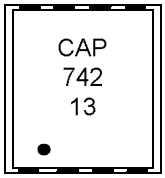

Part Number	1st Line Marking Codes										
	TSSOP	MSOP	UDFN	SOT-23		DFN		TDFN		SC-70	
				I-Temp	E-Temp	I-Temp	E-Temp	I-Temp	E-Temp	I-Temp	E-Temp
24AA01	4A01	4A01T(1)	—	B1NN(2,3)	—	211	—	A11	—	B2NN(2)	—
24LC01B	4L1B	4L1BT(1)	—	M1NN(2,3)	N1NN(2,3)	214	215	A14	A15	B1NN(2)	B3NN(2)
24FC01	AADP	24FC01	CAP	AAEUYY(4)	AAEUYY(4)	—	—	—	—	—	—

Note 1: T = Temperature grade (I, E)
2: NN = Alphanumeric traceability code
3: These parts use the 1-line SOT-23 marking format
4: These parts use the 2-line SOT-23 marking format

Legend:	XX...X	Part number or part number code
	T	Temperature (I, E)
	Y	Year code (last digit of calendar year)
	YY	Year code (last 2 digits of calendar year)
	WW	Week code (week of January 1 is week '01')
	NNN	Alphanumeric traceability code (2 characters for small packages)
	e3	JEDEC® designator for Matte Tin (Sn)

* Standard OTP marking consists of Microchip part number, year code, week code, and traceability code.

Note: For very small packages with no room for the JEDEC® designator e3, the marking will only appear on the outer carton or reel label.

Note: In the event the full Microchip part number cannot be marked on one line, it will be carried over to the next line, thus limiting the number of available characters for customer-specific information.

© 2009-2018 Microchip Technology Inc.

8-Lead Plastic Dual Flat, No Lead Package (MC) – 2x3x0.9 mm Body [DFN]

Note: For the most current package drawings, please see the Microchip Packaging Specification located at http://www.microchip.com/packaging

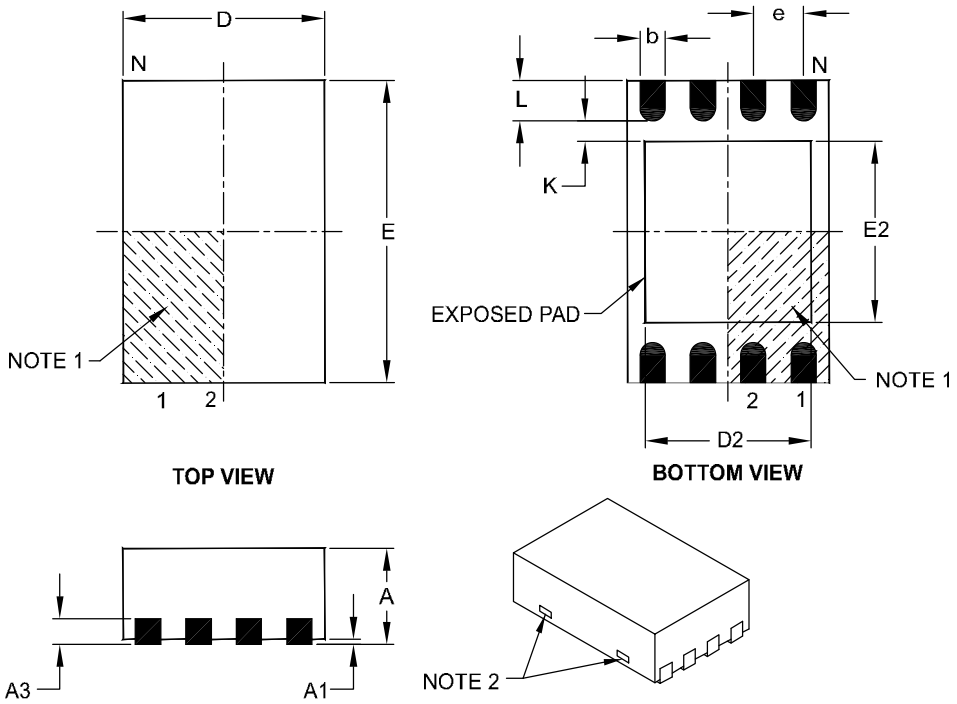

Units		MILLIMETERS		
Dimension Limits		MIN	NOM	MAX
Number of Pins	N	8		
Pitch	e	0.50 BSC		
Overall Height	A	0.80	0.90	1.00
Standoff	A1	0.00	0.02	0.05
Contact Thickness	A3	0.20 REF		
Overall Length	D	2.00 BSC		
Overall Width	E	3.00 BSC		
Exposed Pad Length	D2	1.30	–	1.55
Exposed Pad Width	E2	1.50	–	1.75
Contact Width	b	0.20	0.25	0.30
Contact Length	L	0.30	0.40	0.50
Contact-to-Exposed Pad	K	0.20	–	–

Notes:

1. Pin 1 visual index feature may vary, but must be located within the hatched area.
2. Package may have one or more exposed tie bars at ends.
3. Package is saw singulated.
4. Dimensioning and tolerancing per ASME Y14.5M.
   BSC: Basic Dimension. Theoretically exact value shown without tolerances.
   REF: Reference Dimension, usually without tolerance, for information purposes only.

Microchip Technology Drawing C04-123C

8-Lead Plastic Dual Flat, No Lead Package (MC) - 2x3x0.9mm Body [DFN]

Note: For the most current package drawings, please see the Microchip Packaging Specification located at http://www.microchip.com/packaging

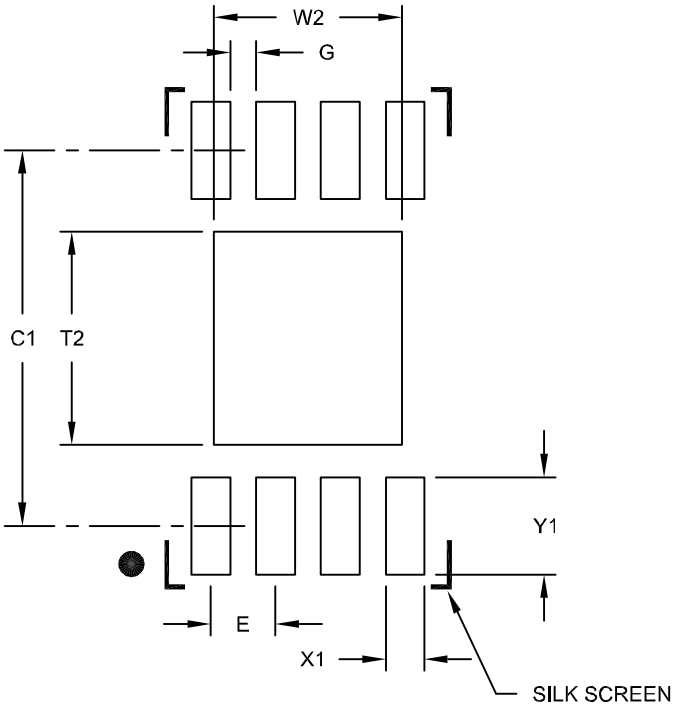

RECOMMENDED LAND PATTERN

Units		MILLIMETERS		
Dimension Limits		MIN	NOM	MAX
Contact Pitch	E		0.50 BSC	
Optional Center Pad Width	W2			1.45
Optional Center Pad Length	T2			1.75
Contact Pad Spacing	C1		2.90	
Contact Pad Width (X8)	X1			0.30
Contact Pad Length (X8)	Y1			0.75
Distance Between Pads	G	0.20		

Notes:

1. Dimensioning and tolerancing per ASME Y14.5M
   BSC: Basic Dimension. Theoretically exact value shown without tolerances.

Microchip Technology Drawing No. C04-2123B

© 2009-2018 Microchip Technology Inc.

8-Lead Plastic Micro Small Outline Package (MS) [MSOP]

Note: For the most current package drawings, please see the Microchip Packaging Specification located at http://www.microchip.com/packaging

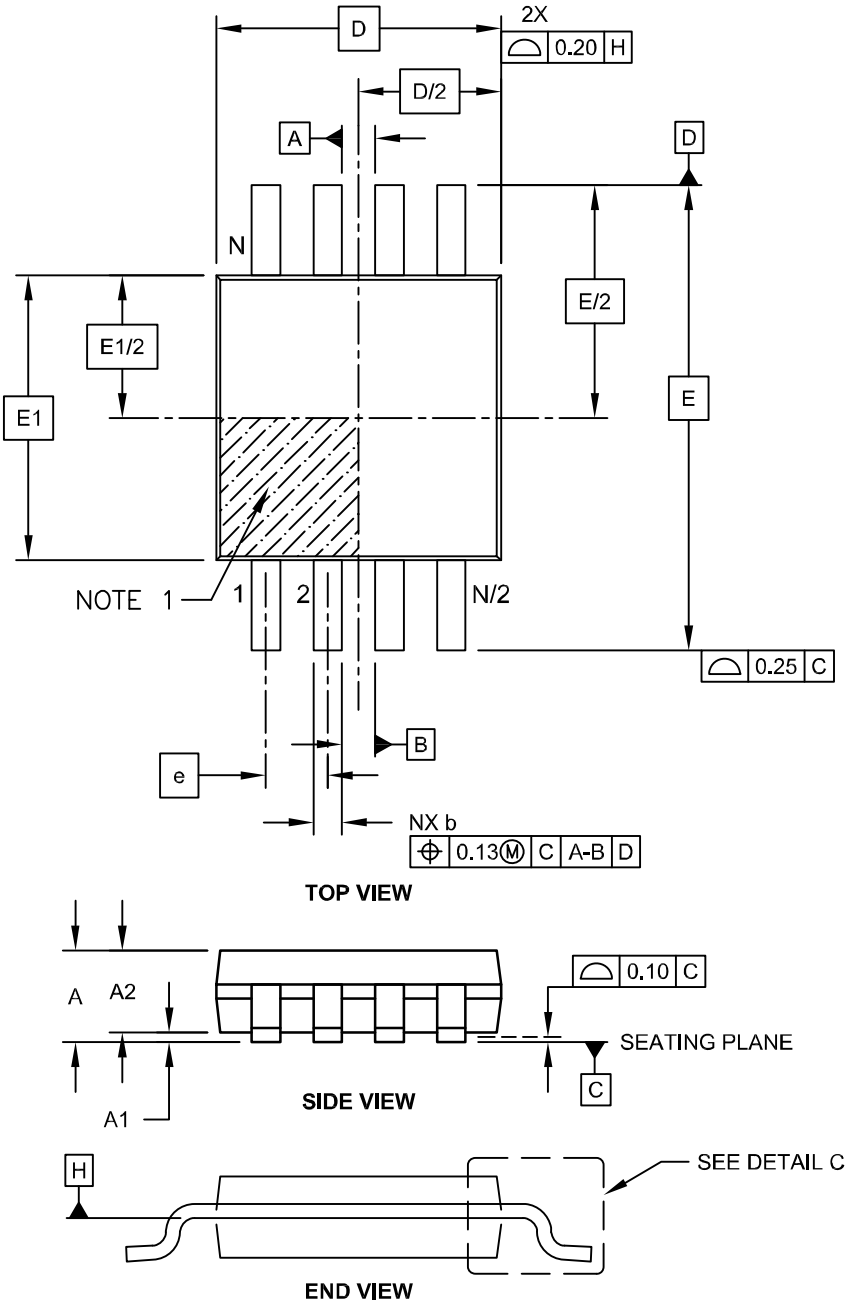

Microchip Technology Drawing C04-111C Sheet 1 of 2

8-Lead Plastic Micro Small Outline Package (MS) [MSOP]

Note: For the most current package drawings, please see the Microchip Packaging Specification located at http://www.microchip.com/packaging

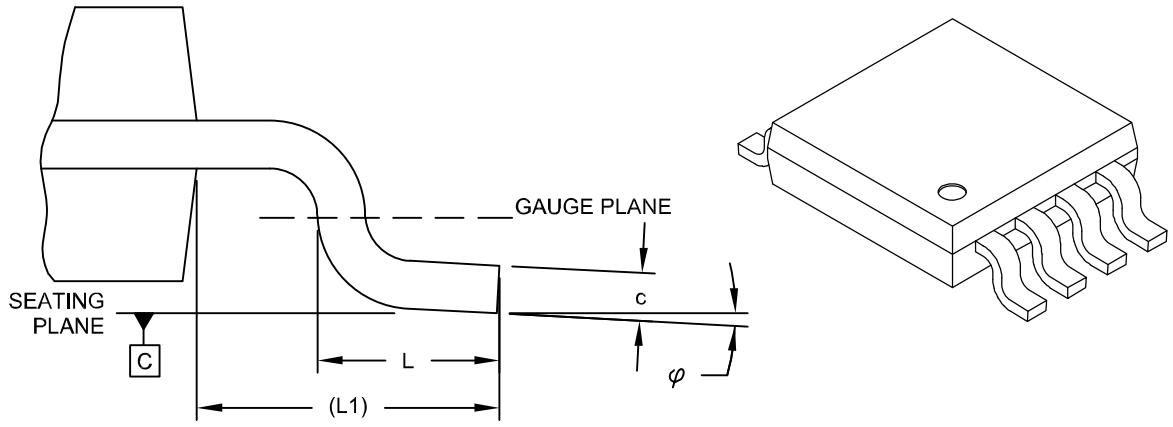

DETAIL C

Units		MILLIMETERS		
Dimension Limits		MIN	NOM	MAX
Number of Pins	N		8	
Pitch	e		0.65 BSC	
Overall Height	A	-	-	1.10
Molded Package Thickness	A2	0.75	0.85	0.95
Standoff	A1	0.00	-	0.15
Overall Width	E		4.90 BSC	
Molded Package Width	E1		3.00 BSC	
Overall Length	D		3.00 BSC	
Foot Length	L	0.40	0.60	0.80
Footprint	L1		0.95 REF	
Foot Angle	φ	0°	-	8°
Lead Thickness	c	0.08	-	0.23
Lead Width	b	0.22	-	0.40

Notes:

1. Pin 1 visual index feature may vary, but must be located within the hatched area.
2. Dimensions D and E1 do not include mold flash or protrusions. Mold flash or protrusions shall not exceed 0.15mm per side.
3. Dimensioning and tolerancing per ASME Y14.5M.
   BSC: Basic Dimension. Theoretically exact value shown without tolerances.
   REF: Reference Dimension, usually without tolerance, for information purposes only.

Microchip Technology Drawing C04-111C Sheet 2 of 2

© 2009-2018 Microchip Technology Inc.

8-Lead Plastic Micro Small Outline Package (MS) [MSOP]

Note: For the most current package drawings, please see the Microchip Packaging Specification located at http://www.microchip.com/packaging

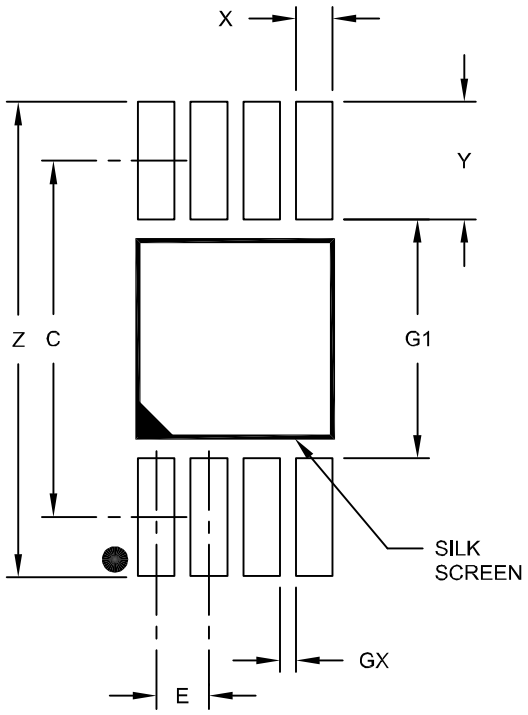

RECOMMENDED LAND PATTERN

Units		MILLIMETERS		
Dimension Limits		MIN	NOM	MAX
Contact Pitch	E	0.65 BSC		
Contact Pad Spacing	C		4.40	
Overall Width	Z			5.85
Contact Pad Width (X8)	X1			0.45
Contact Pad Length (X8)	Y1			1.45
Distance Between Pads	G1	2.95		
Distance Between Pads	GX	0.20		

Notes:

1. Dimensioning and tolerancing per ASME Y14.5M
   BSC: Basic Dimension. Theoretically exact value shown without tolerances.

Microchip Technology Drawing No. C04-2111A

8-Lead Plastic Dual In-Line (P) - 300 mil Body [PDIP]

Note: For the most current package drawings, please see the Microchip Packaging Specification located at http://www.microchip.com/packaging

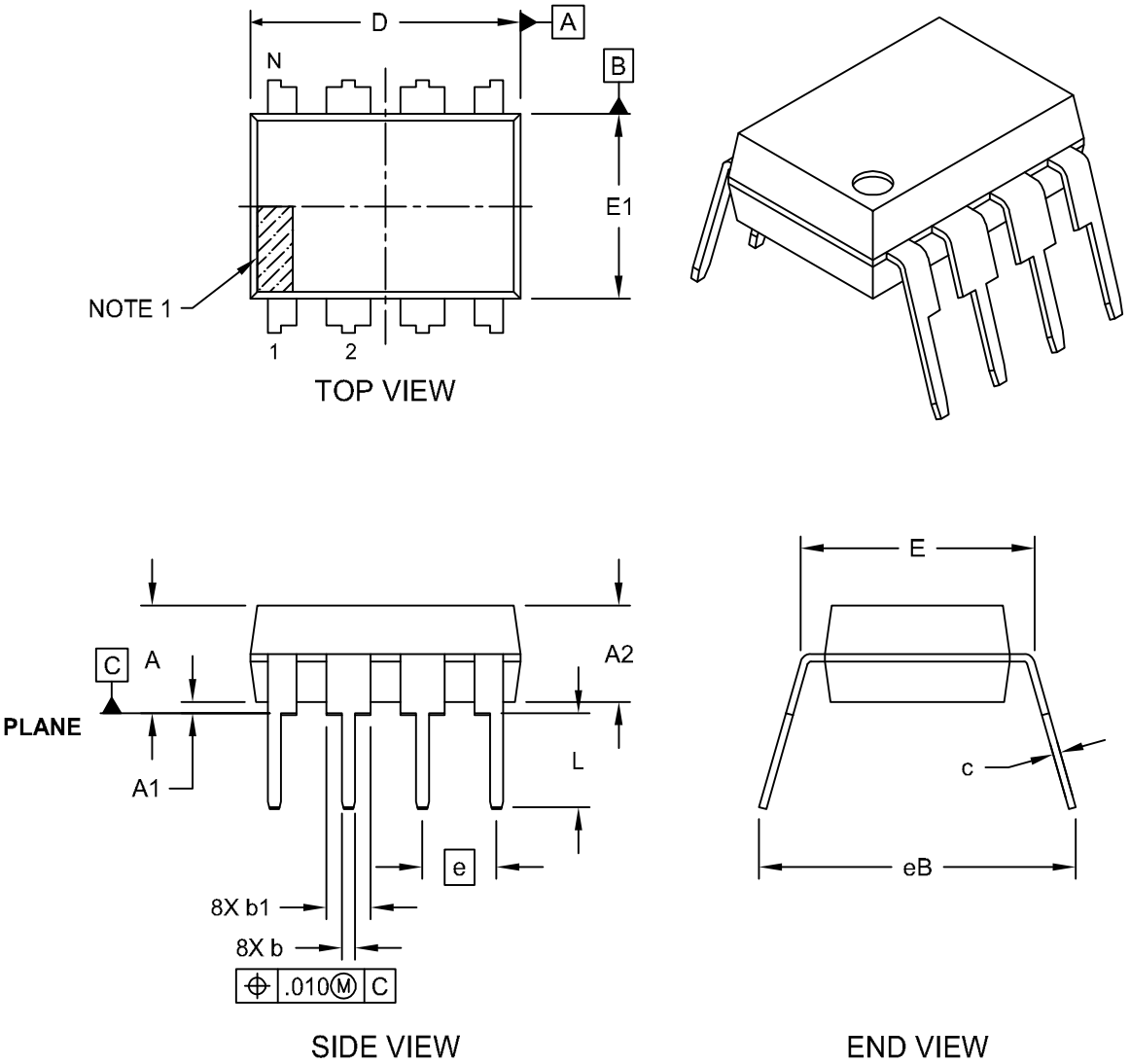

Microchip Technology Drawing No. C04-018D Sheet 1 of 2

© 2009-2018 Microchip Technology Inc.

8-Lead Plastic Dual In-Line (P) - 300 mil Body [PDIP]

Note: For the most current package drawings, please see the Microchip Packaging Specification located at http://www.microchip.com/packaging

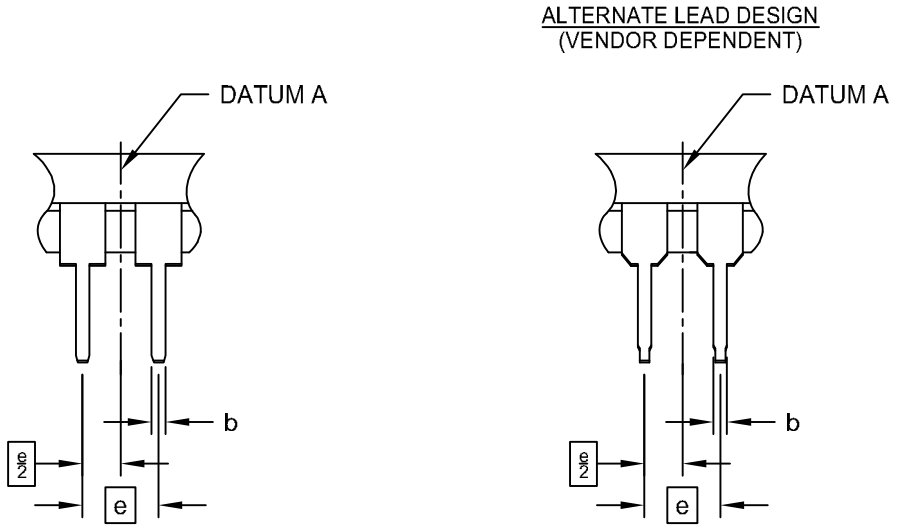

Units		INCHES		
Dimension Limits		MIN	NOM	MAX
Number of Pins	N	8		
Pitch	e	.100 BSC		
Top to Seating Plane	A	-	-	.210
Molded Package Thickness	A2	.115	.130	.195
Base to Seating Plane	A1	.015	-	-
Shoulder to Shoulder Width	E	.290	.310	.325
Molded Package Width	E1	.240	.250	.280
Overall Length	D	.348	.365	.400
Tip to Seating Plane	L	.115	.130	.150
Lead Thickness	c	.008	.010	.015
Upper Lead Width	b1	.040	.060	.070
Lower Lead Width	b	.014	.018	.022
Overall Row Spacing §	eB	-	-	.430

Notes:

1. Pin 1 visual index feature may vary, but must be located within the hatched area.
2. § Significant Characteristic
3. Dimensions D and E1 do not include mold flash or protrusions. Mold flash or protrusions shall not exceed .010" per side.
4. Dimensioning and tolerancing per ASME Y14.5M
   BSC: Basic Dimension. Theoretically exact value shown without tolerances.

Microchip Technology Drawing No. C04-018D Sheet 2 of 2

5-Lead Plastic Small Outline Transistor (LT) [SC70]

Note: For the most current package drawings, please see the Microchip Packaging Specification located at http://www.microchip.com/packaging

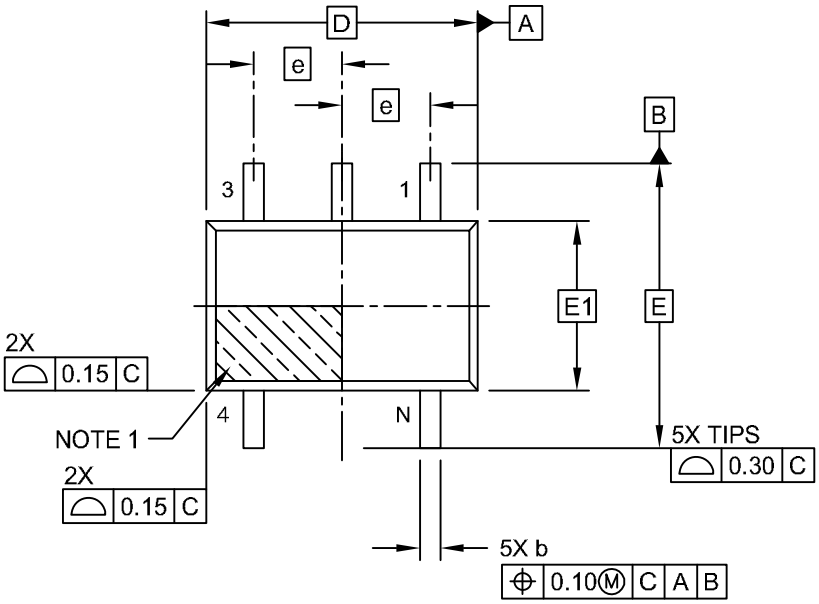

TOP VIEW

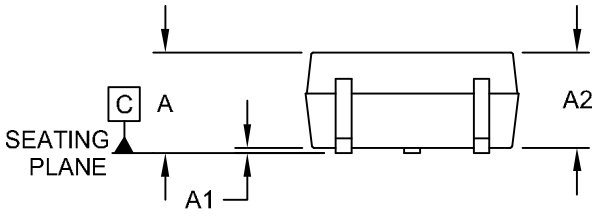

SIDE VIEW

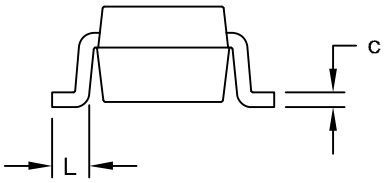

END VIEW

Microchip Technology Drawing C04-061D Sheet 1 of 2

© 2009-2018 Microchip Technology Inc.

5-Lead Plastic Small Outline Transistor (LT) [SC70]

Note: For the most current package drawings, please see the Microchip Packaging Specification located at http://www.microchip.com/packaging

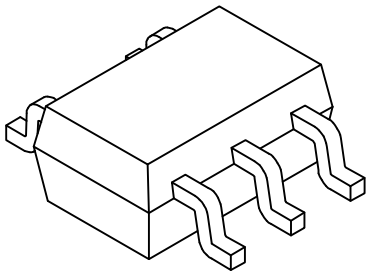

Units		MILLIMETERS		
Dimension Limits		MIN	NOM	MAX
Number of Pins	N	5		
Pitch	e	0.65 BSC		
Overall Height	A	0.80	-	1.10
Standoff	A1	0.00	-	0.10
Molded Package Thickness	A2	0.80	-	1.00
Overall Length	D	2.00 BSC		
Exposed Pad Length	D2	2.50	2.60	2.70
Overall Width	E	2.10 BSC		
Exposed Pad Width	E1	1.25 BSC		
Terminal Width	b	0.15	-	0.40
Terminal Length	L	0.10	0.20	0.46
Lead Thickness	c	0.08	-	0.26

Notes:

1. Pin 1 visual index feature may vary, but must be located within the hatched area.
2. Dimensions D and E1 do not include mold flash or protrusions. Mold flash or protrusions shall not exceed 0.15mm per side.
3. Dimensioning and tolerancing per ASME Y14.5M

   BSC: Basic Dimension. Theoretically exact value shown without tolerances.

   REF: Reference Dimension, usually without tolerance, for information purposes only.

Microchip Technology Drawing C04-061D Sheet 2 of 2

5-Lead Plastic Small Outline Transistor (LT) [SC70]

Note: For the most current package drawings, please see the Microchip Packaging Specification located at http://www.microchip.com/packaging

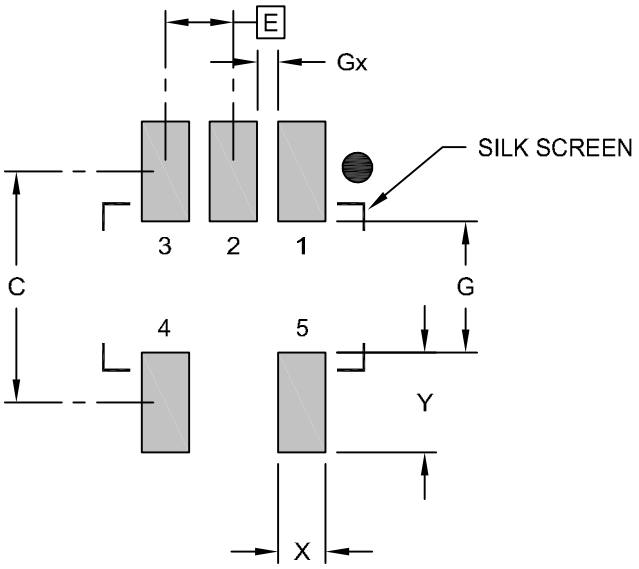

RECOMMENDED LAND PATTERN

Units		MILLIMETERS		
Dimension Limits		MIN	NOM	MAX
Contact Pitch	E		0.65 BSC	
Contact Pad Spacing	C		2.20	
Contact Pad Width	X			0.45
Contact Pad Length	Y			0.95
Distance Between Pads	G	1.25		
Distance Between Pads	Gx	0.20		

Notes:

1. Dimensioning and tolerancing per ASME Y14.5M
   BSC: Basic Dimension. Theoretically exact value shown without tolerances.

Microchip Technology Drawing No. C04-2061B

© 2009-2018 Microchip Technology Inc.

8-Lead Plastic Small Outline (SN) - Narrow, 3.90 mm (.150 In.) Body [SOIC]

Note: For the most current package drawings, please see the Microchip Packaging Specification located at http://www.microchip.com/packaging

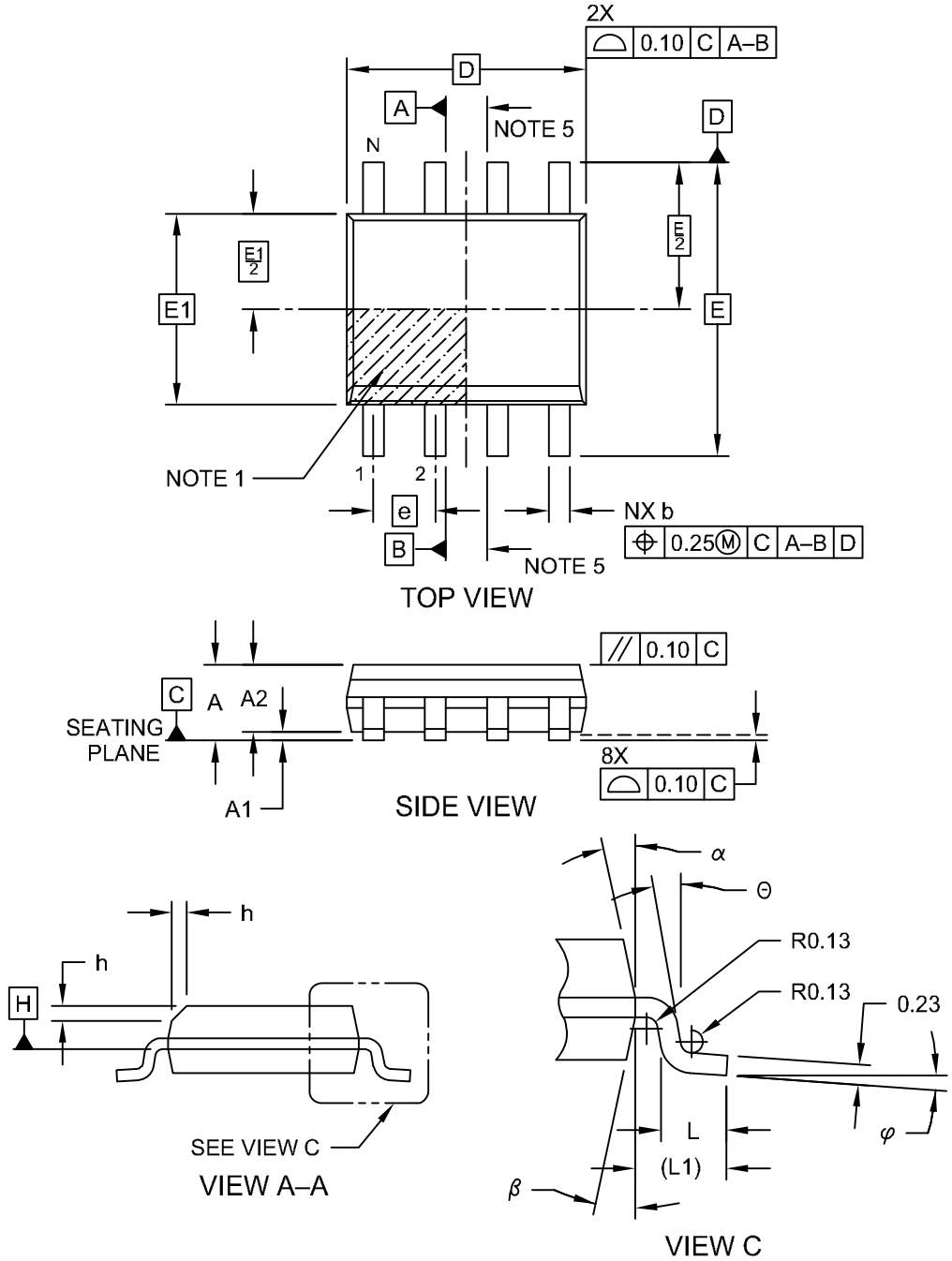

Microchip Technology Drawing No. C04-057-SN Rev D Sheet 1 of 2

8-Lead Plastic Small Outline (SN) - Narrow, 3.90 mm (.150 In.) Body [SOIC]

Note: For the most current package drawings, please see the Microchip Packaging Specification located at http://www.microchip.com/packaging

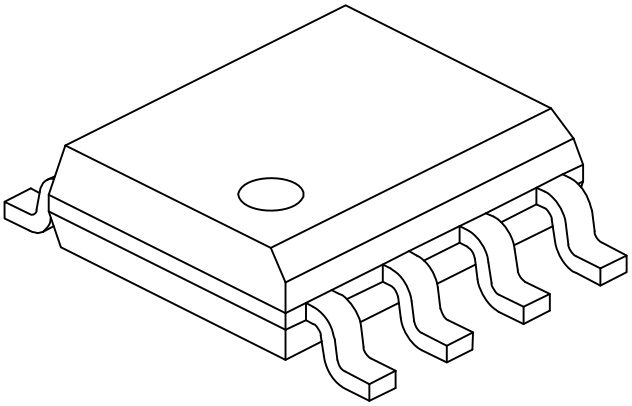

Units		MILLIMETERS		
Dimension Limits		MIN	NOM	MAX
Number of Pins	N	8		
Pitch	e	1.27 BSC		
Overall Height	A	-	-	1.75
Molded Package Thickness	A2	1.25	-	-
Standoff §	A1	0.10	-	0.25
Overall Width	E	6.00 BSC		
Molded Package Width	E1	3.90 BSC		
Overall Length	D	4.90 BSC		
Chamfer (Optional)	h	0.25	-	0.50
Foot Length	L	0.40	-	1.27
Footprint	L1	1.04 REF		
Foot Angle	φ	0°	-	8°
Lead Thickness	c	0.17	-	0.25
Lead Width	b	0.31	-	0.51
Mold Draft Angle Top	α	5°	-	15°
Mold Draft Angle Bottom	β	5°	-	15°

Notes:

1. Pin 1 visual index feature may vary, but must be located within the hatched area.
2. § Significant Characteristic
3. Dimensions D and E1 do not include mold flash or protrusions. Mold flash or protrusions shall not exceed 0.15mm per side.
4. Dimensioning and tolerancing per ASME Y14.5M
   BSC: Basic Dimension. Theoretically exact value shown without tolerances.
   REF: Reference Dimension, usually without tolerance, for information purposes only.
5. Datums A & B to be determined at Datum H.

Microchip Technology Drawing No. C04-057-SN Rev D Sheet 2 of 2

© 2009-2018 Microchip Technology Inc.

8-Lead Plastic Small Outline (SN) - Narrow, 3.90 mm Body [SOIC]

Note: For the most current package drawings, please see the Microchip Packaging Specification located at http://www.microchip.com/packaging

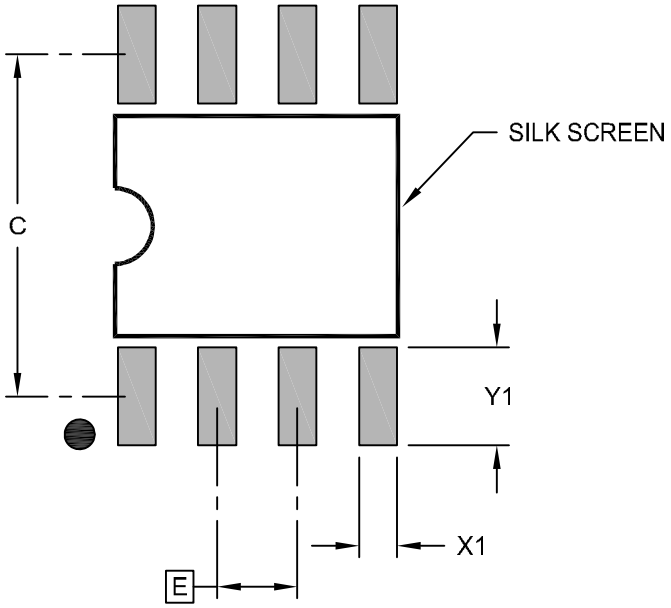

RECOMMENDED LAND PATTERN

Units		MILLIMETERS		
Dimension Limits		MIN	NOM	MAX
Contact Pitch	E	1.27 BSC		
Contact Pad Spacing	C		5.40	
Contact Pad Width (X8)	X1			0.60
Contact Pad Length (X8)	Y1			1.55

Notes:

1. Dimensioning and tolerancing per ASME Y14.5M
   BSC: Basic Dimension. Theoretically exact value shown without tolerances.

Microchip Technology Drawing C04-2057-SN Rev B

5-Lead Plastic Small Outline Transistor (OT) [SOT23]

Note: For the most current package drawings, please see the Microchip Packaging Specification located at http://www.microchip.com/packaging

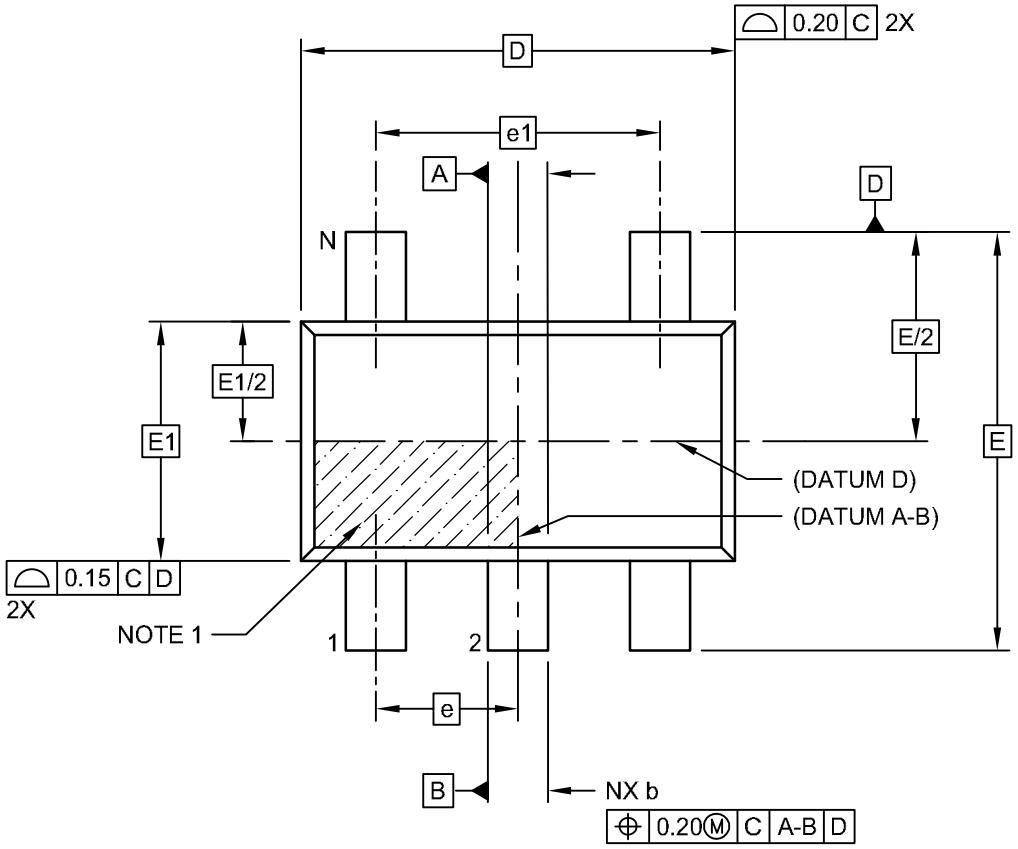

TOP VIEW

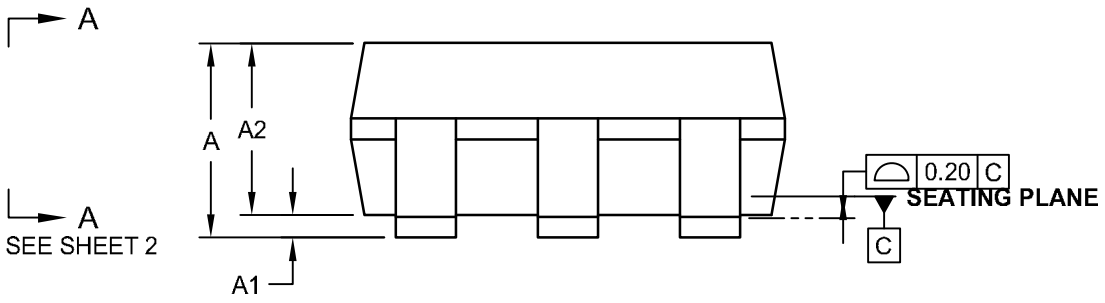

SIDE VIEW

Microchip Technology Drawing C04-028D [OT] Sheet 1 of 2

© 2009-2018 Microchip Technology Inc.

5-Lead Plastic Small Outline Transistor (OT) [SOT23]

Note: For the most current package drawings, please see the Microchip Packaging Specification located at http://www.microchip.com/packaging

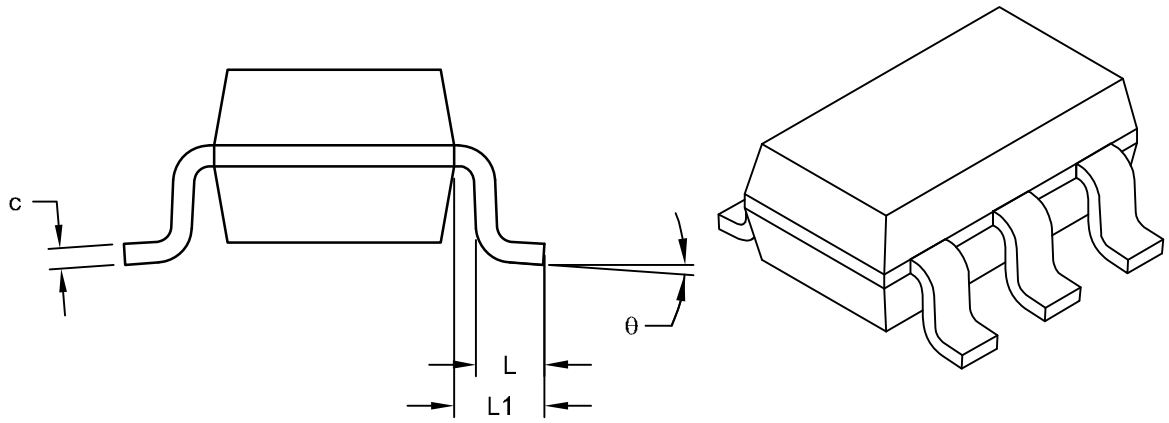

VIEW A-A
SHEET 1

Units		MILLIMETERS		
Dimension Limits		MIN	NOM	MAX
Number of Pins	N	6		
Pitch	e	0.95 BSC		
Outside lead pitch	e1	1.90 BSC		
Overall Height	A	0.90	-	1.45
Molded Package Thickness	A2	0.89	-	1.30
Standoff	A1	-	-	0.15
Overall Width	E	2.80 BSC		
Molded Package Width	E1	1.60 BSC		
Overall Length	D	2.90 BSC		
Foot Length	L	0.30	-	0.60
Footprint	L1	0.60 REF		
Foot Angle	ϕ	0°	-	10°
Lead Thickness	c	0.08	-	0.26
Lead Width	b	0.20	-	0.51

Notes:
1. Dimensions D and E1 do not include mold flash or protrusions. Mold flash or protrusions shall not exceed 0.25mm per side.
2. Dimensioning and tolerancing per ASME Y14.5M
   BSC: Basic Dimension. Theoretically exact value shown without tolerances.
   REF: Reference Dimension, usually without tolerance, for information purposes only.

Microchip Technology Drawing C04-091D [OT] Sheet 2 of 2

5-Lead Plastic Small Outline Transistor (OT) [SOT23]

Note: For the most current package drawings, please see the Microchip Packaging Specification located at http://www.microchip.com/packaging

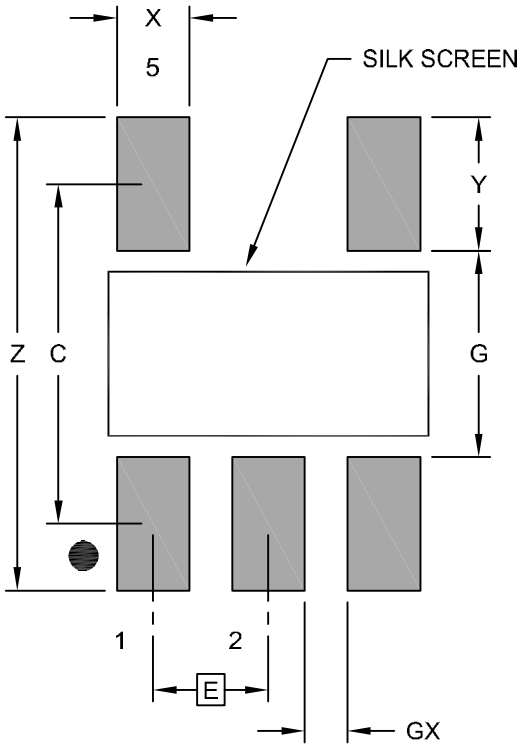

RECOMMENDED LAND PATTERN

Units		MILLIMETERS		
Dimension Limits		MIN	NOM	MAX
Contact Pitch	E		0.95 BSC	
Contact Pad Spacing	C		2.80	
Contact Pad Width (X5)	X			0.60
Contact Pad Length (X5)	Y			1.10
Distance Between Pads	G	1.70		
Distance Between Pads	GX	0.35		
Overall Width	Z			3.90

Notes:

1. Dimensioning and tolerancing per ASME Y14.5M
   BSC: Basic Dimension. Theoretically exact value shown without tolerances.

Microchip Technology Drawing No. C04-2091A [OT]

© 2009-2018 Microchip Technology Inc.

8-Lead Plastic Dual Flat, No Lead Package (MNY) – 2x3x0.8 mm Body [TDFN] With 1.4x1.3 mm Exposed Pad (JEDEC Package type WDFN)

Note: For the most current package drawings, please see the Microchip Packaging Specification located at http://www.microchip.com/packaging

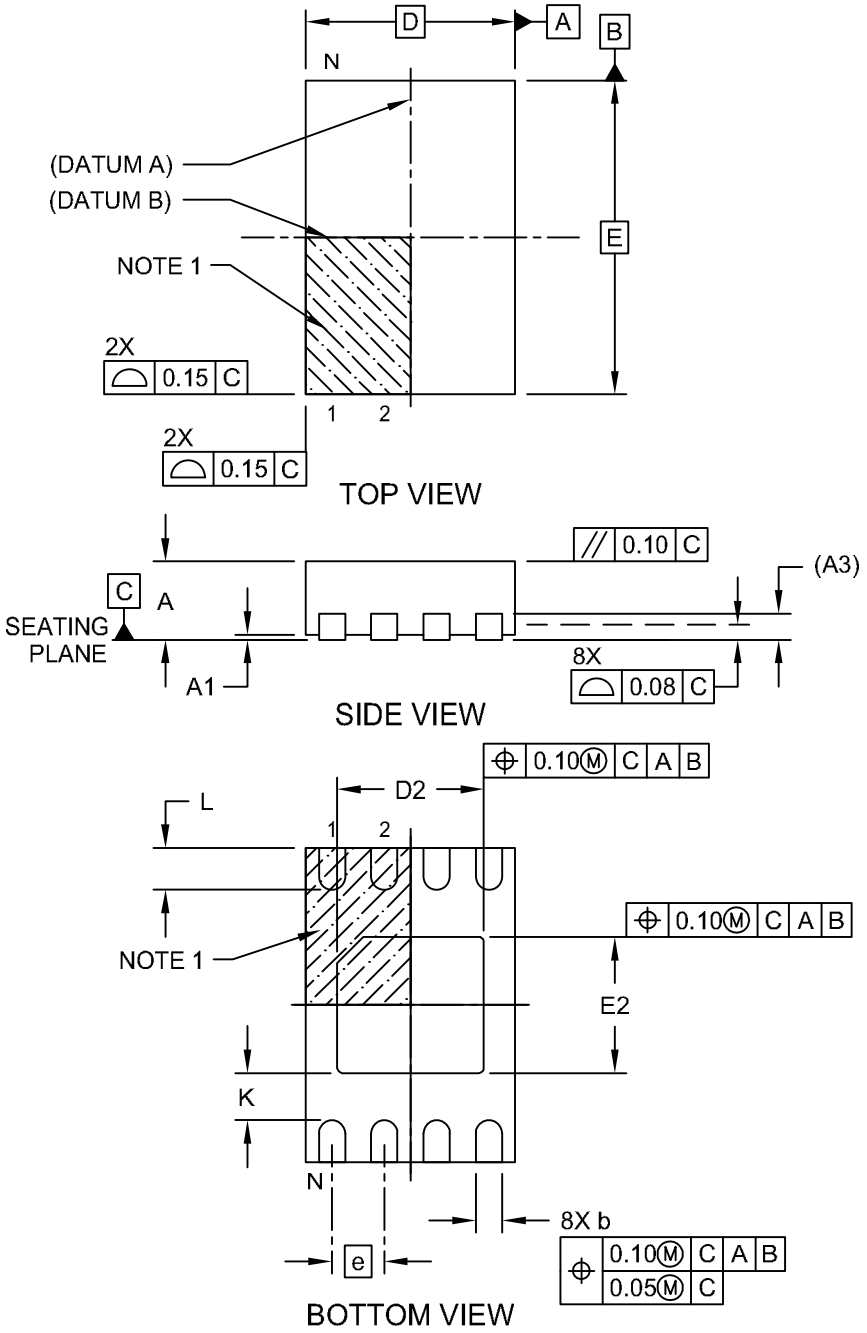

Microchip Technology Drawing No. C04-129-MNY Rev E Sheet 1 of 2

8-Lead Plastic Dual Flat, No Lead Package (MNY) – 2x3x0.8 mm Body [TDFN] With 1.4x1.3 mm Exposed Pad (JEDEC Package type WDFN)

Note: For the most current package drawings, please see the Microchip Packaging Specification located at http://www.microchip.com/packaging

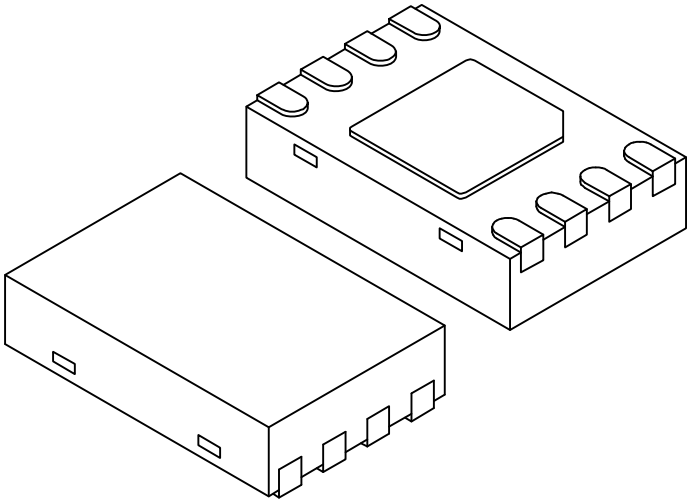

Units		MILLIMETERS		
Dimension Limits		MIN	NOM	MAX
Number of Pins	N	8		
Pitch	e	0.50 BSC		
Overall Height	A	0.70	0.75	0.80
Standoff	A1	0.00	0.02	0.05
Contact Thickness	A3	0.20 REF		
Overall Length	D	2.00 BSC		
Overall Width	E	3.00 BSC		
Exposed Pad Length	D2	1.35	1.40	1.45
Exposed Pad Width	E2	1.25	1.30	1.35
Contact Width	b	0.20	0.25	0.30
Contact Length	L	0.25	0.30	0.45
Contact-to-Exposed Pad	K	0.20	-	-

Notes:

1. Pin 1 visual index feature may vary, but must be located within the hatched area.
2. Package may have one or more exposed tie bars at ends.
3. Package is saw singulated
4. Dimensioning and tolerancing per ASME Y14.5M

   BSC: Basic Dimension. Theoretically exact value shown without tolerances.

   REF: Reference Dimension, usually without tolerance, for information purposes only.

Microchip Technology Drawing No. C04-129-MNY Rev E Sheet 2 of 2

© 2009-2018 Microchip Technology Inc.

8-Lead Plastic Dual Flat, No Lead Package (MNY) – 2x3x0.8 mm Body [TDFN] With 1.4x1.3 mm Exposed Pad (JEDEC Package type WDFN)

Note: For the most current package drawings, please see the Microchip Packaging Specification located at http://www.microchip.com/packaging

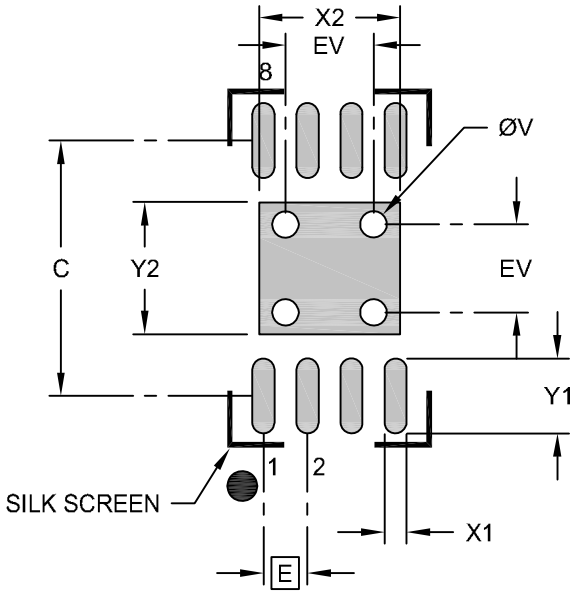

RECOMMENDED LAND PATTERN

Units		MILLIMETERS		
Dimension Limits		MIN	NOM	MAX
Contact Pitch	E		0.50 BSC	
Optional Center Pad Width	X2			1.60
Optional Center Pad Length	Y2			1.50
Contact Pad Spacing	C		2.90	
Contact Pad Width (X8)	X1			0.25
Contact Pad Length (X8)	Y1			0.85
Thermal Via Diameter	V		0.30	
Thermal Via Pitch	EV		1.00	

Notes:

1. Dimensioning and tolerancing per ASME Y14.5M
   BSC: Basic Dimension. Theoretically exact value shown without tolerances.
2. For best soldering results, thermal vias, if used, should be filled or tented to avoid solder loss during reflow process

Microchip Technology Drawing No. C04-129-MNY Rev. B

8-Lead Plastic Thin Shrink Small Outline (ST) – 4.4 mm Body [TSSOP]

Note: For the most current package drawings, please see the Microchip Packaging Specification located at http://www.microchip.com/packaging

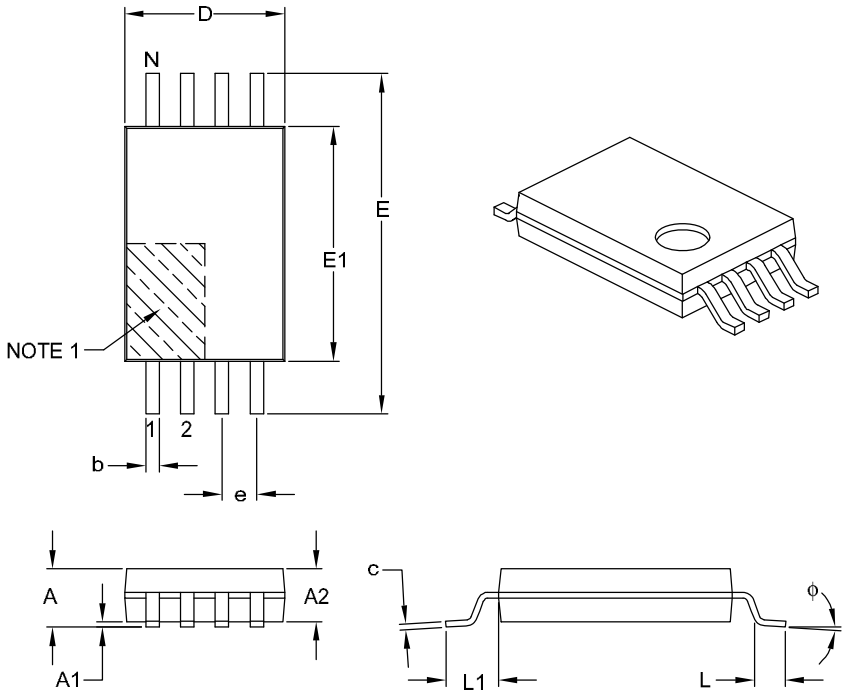

Units		MILLIMETERS		
Dimension Limits		MIN	NOM	MAX
Number of Pins	N	8		
Pitch	e	0.65 BSC		
Overall Height	A	–	–	1.20
Molded Package Thickness	A2	0.80	1.00	1.05
Standoff	A1	0.05	–	0.15
Overall Width	E	6.40 BSC		
Molded Package Width	E1	4.30	4.40	4.50
Molded Package Length	D	2.90	3.00	3.10
Foot Length	L	0.45	0.60	0.75
Footprint	L1	1.00 REF		
Foot Angle	ϕ	0°	–	8°
Lead Thickness	c	0.09	–	0.20
Lead Width	b	0.19	–	0.30

Notes:

1. Pin 1 visual index feature may vary, but must be located within the hatched area.
2. Dimensions D and E1 do not include mold flash or protrusions. Mold flash or protrusions shall not exceed 0.15 mm per side.
3. Dimensioning and tolerancing per ASME Y14.5M.

   BSC: Basic Dimension. Theoretically exact value shown without tolerances.

   REF: Reference Dimension, usually without tolerance, for information purposes only.

Microchip Technology Drawing C04-086B

© 2009-2018 Microchip Technology Inc.

8-Lead Plastic Thin Shrink Small Outline (ST) - 4.4 mm Body [TSSOP]

Note: For the most current package drawings, please see the Microchip Packaging Specification located at http://www.microchip.com/packaging

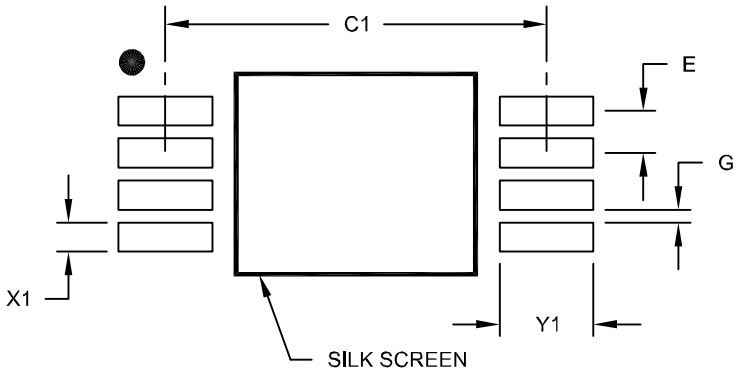

RECOMMENDED LAND PATTERN

Units		MILLIMETERS		
Dimension Limits		MIN	NOM	MAX
Contact Pitch	E	0.65 BSC		
Contact Pad Spacing	C1		5.90	
Contact Pad Width (X8)	X1			0.45
Contact Pad Length (X8)	Y1			1.45
Distance Between Pads	G	0.20		

Notes:

1. Dimensioning and tolerancing per ASME Y14.5M

BSC: Basic Dimension. Theoretically exact value shown without tolerances.

Microchip Technology Drawing No. C04-2086A

8-Lead Ultra Thin Plastic Dual Flat, No Lead Package (Q4B) - 2x3 mm Body [UDFN]
Atmel Legacy YNZ Package

Note:	For the most current package drawings, please see the Microchip Packaging Specification located at http://www.microchip.com/packaging

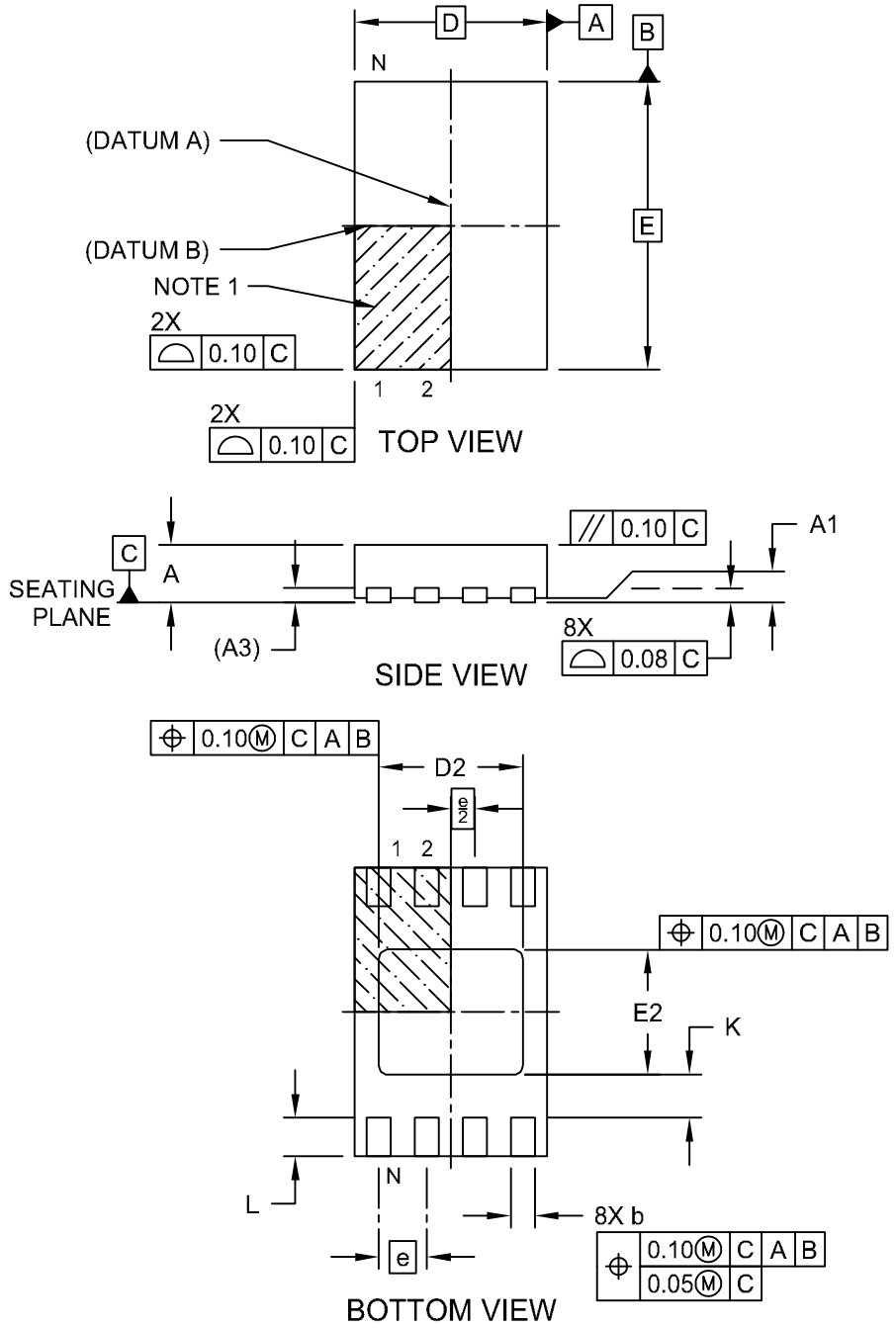

Microchip Technology Drawing C04-21355-Q4B Rev A Sheet 1 of 2

© 2009-2018 Microchip Technology Inc.

8-Lead Ultra Thin Plastic Dual Flat, No Lead Package (Q4B) - 2x3 mm Body [UDFN] Atmel Legacy YNZ Package

Note: For the most current package drawings, please see the Microchip Packaging Specification located at http://www.microchip.com/packaging

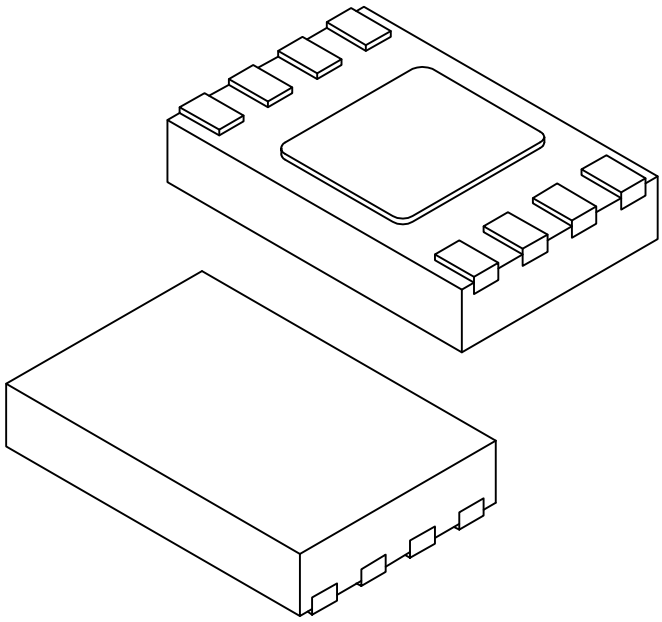

Units		MILLIMETERS		
Dimension Limits		MIN	NOM	MAX
Number of Terminals	N	8		
Pitch	e	0.50 BSC		
Overall Height	A	0.50	0.55	0.60
Standoff	A1	0.00	0.02	0.05
Terminal Thickness	A3	0.152 REF		
Overall Length	D	2.00 BSC		
Exposed Pad Length	D2	1.40	1.50	1.60
Overall Width	E	3.00 BSC		
Exposed Pad Width	E2	1.20	1.30	1.40
Terminal Width	b	0.18	0.25	0.30
Terminal Length	L	0.35	0.40	0.45
Terminal-to-Exposed-Pad	K	0.20	-	-

Notes:

1. Pin 1 visual index feature may vary, but must be located within the hatched area.
2. Package is saw singulated
3. Dimensioning and tolerancing per ASME Y14.5M

   BSC: Basic Dimension. Theoretically exact value shown without tolerances.

   REF: Reference Dimension, usually without tolerance, for information purposes only.

Microchip Technology Drawing C04-21355-Q4B Rev A Sheet 2 of 2

8-Lead Ultra Thin Plastic Dual Flat, No Lead Package (Q4B) - 2x3 mm Body [UDFN] Atmel Legacy YNZ Package

Note: For the most current package drawings, please see the Microchip Packaging Specification located at http://www.microchip.com/packaging

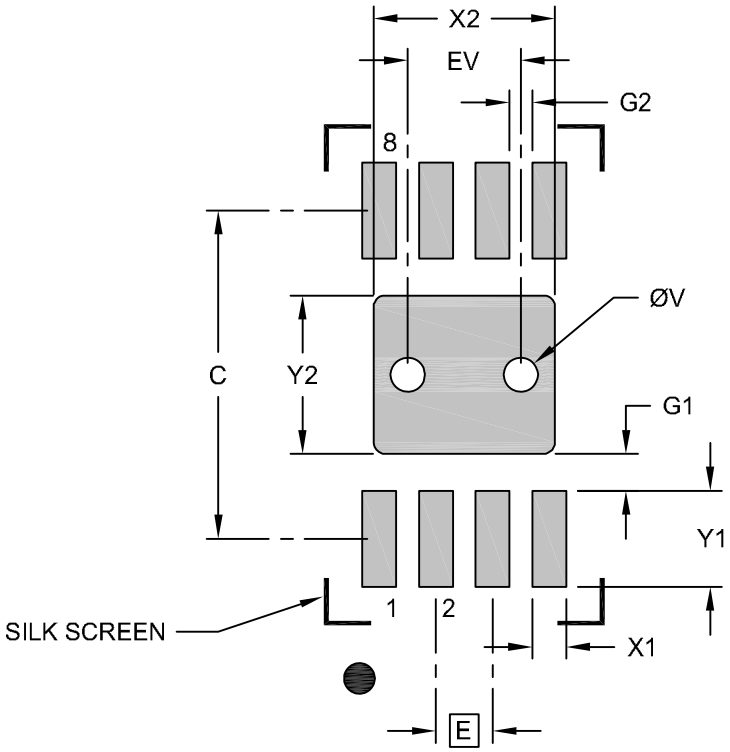

RECOMMENDED LAND PATTERN

Units		MILLIMETERS		
Dimension Limits		MIN	NOM	MAX
Contact Pitch	E		0.50 BSC	
Optional Center Pad Width	X2			1.60
Optional Center Pad Length	Y2			1.40
Contact Pad Spacing	C		2.90	
Contact Pad Width (X8)	X1			0.30
Contact Pad Length (X8)	Y1			0.85
Contact Pad to Center Pad (X8)	G1	0.20		
Contact Pad to Contact Pad (X6)	G2	0.33		
Thermal Via Diameter	V		0.30	
Thermal Via Pitch	EV		1.00	

Notes:

1. Dimensioning and tolerancing per ASME Y14.5M
   BSC: Basic Dimension. Theoretically exact value shown without tolerances.
2. For best soldering results, thermal vias, if used, should be filled or tented to avoid solder loss during reflow process

Microchip Technology Drawing C04-21355-Q4B Rev A

© 2009-2018 Microchip Technology Inc.

APPENDIX A: REVISION HISTORY

Revision K (11/2018)

Added the 24FC01 device.

Revision J (01/2009)

Added TDFN Package; Updated Package Drawings.

Revision H (08/2008)

Added SC-70 Package; Updated Package Drawings.

Revision G (03/2007)

Replaced Package Drawings (Rev. AM).

Revision F (01/2007)

Revised Device Selection Table; Revised Features Section; Changed 1.8V to 1.7V; Revised Table 1-1, 1-2, 8-1; Replaced Package Drawings; Revised Product ID System.

Revision E

Revised Figure 3-2 Control Byte Allocation; Figure 4-1 Byte Write; Figure 4-2 Page Write; Section 6.0 Write Protection; Figure 7-1 Current Address Read; Figure 7-2 Random Read; Figure 7-3 Sequential Read.

Revision D

Added DFN package.

Revision C

Corrections to Section 1.0, Electrical Characteristics and Section 9.1, 24LC01B standard marking code.

THE MICROCHIP WEBSITE

Microchip provides online support via our website at www.microchip.com. This website is used as a means to make files and information easily available to customers. Accessible by using your favorite Internet browser, the website contains the following information:

- **Product Support** – Data sheets and errata, application notes and sample programs, design resources, user's guides and hardware support documents, latest software releases and archived software
- **General Technical Support** – Frequently Asked Questions (FAQ), technical support requests, online discussion groups, Microchip consultant program member listing
- **Business of Microchip** – Product selector and ordering guides, latest Microchip press releases, listing of seminars and events, listings of Microchip sales offices, distributors and factory representatives

CUSTOMER CHANGE NOTIFICATION SERVICE

Microchip's customer notification service helps keep customers current on Microchip products. Subscribers will receive e-mail notification whenever there are changes, updates, revisions or errata related to a specified product family or development tool of interest.

To register, access the Microchip website at www.microchip.com. Under "Support", click on "Customer Change Notification" and follow the registration instructions.

CUSTOMER SUPPORT

Users of Microchip products can receive assistance through several channels:

- Distributor or Representative
- Local Sales Office
- Field Application Engineer (FAE)
- Technical Support

Customers should contact their distributor, representative or Field Application Engineer (FAE) for support. Local sales offices are also available to help customers. A listing of sales offices and locations is included in the back of this document.

Technical support is available through the website at: http://microchip.com/support

NOTES:

© 2018 Microchip Technology Inc.

PRODUCT IDENTIFICATION SYSTEM

To order or obtain information, e.g., on pricing or delivery, refer to the factory or the listed sales office.

PART NO.	[X](1)	–X	/XX
Device	Tape and Reel Option	Temperature Range	Package

Device:
- 24AA01: = 1.7V, 1 Kbit I^2C Serial EEPROM
- 24LC01B: = 2.5V, 1 Kbit I^2C Serial EEPROM
- 24FC01: = 1.7V, High Speed, 1 Kbit I^2C Serial EEPROM

Tape and Reel Option:
- Blank = Standard packaging (tube or tray)
- T = Tape and Reel(1)

Temperature Range:
- I = -40°C to +85°C (Industrial)
- E = -40°C to +125°C (Extended)

Package:
- MC = Plastic Dual Flat, No Lead Package – 2x3x0.9mm, Body, 8-lead (DFN)
- MS = Plastic Micro Small Outline Package, 8-lead (MSOP)
- P = Plastic Dual In-Line – 300 mil Body, 8-lead (PDIP)
- LT = Plastic Small Outline Transistor, 5-lead (SC-70) (Tape and Reel only)
- SN = Plastic Small Outline - Narrow, 3.90 mm Body, 8-lead (SOIC)
- OT = Plastic Small Outline Transistor, 5-lead (SOT-23) (Tape and Reel only)
- MNY = Plastic Dual Flat, No Lead Package - 2x3x0.8 mm Body, 8-lead (TDFN)
- ST = Plastic Thin Shrink Small Outline – 4.4 mm, 8-lead (TSSOP)
- MUY = Plastic Dual Flat, No Lead Package - 2x3x0.6 mm Body, 8-lead (UDFN)

Examples:

a) 24LC01BT-E/MC: Tape and Reel, Extended Temperature, 2.5V, DFN package.
b) 24LC01BT-I/MS: Tape and Reel, Industrial Temperature, 2.5V, MSOP package.
c) 24AA01-I/P: Industrial Temperature, 1.7V, PDIP package.
d) 24LC01BT-I/LT: Tape and Reel, Industrial Temperature, 2.5V, SC-70 package.
e) 24AA01-I/SN: Industrial Temperature, 1.7V, SOIC package.
f) 24AA01T-I/OT: Tape and Reel, Industrial Temperature, 1.7V, SOT-23 package.
g) 24AA01T-I/MNY: Tape and Reel, Industrial Temperature, 1.7V, TDFN package.
h) 24AA01T-I/ST: Tape and Reel, Industrial Temperature, 1.7V, TSSOP package.
i) 24FC01-I/P: Industrial Temperature, 1.7V, PDIP package.
j) 24FC01T-I/MUY: Tape and Reel, Industrial Temperature, 1.7V, UDFN package.

Note 1: Tape and Reel identifier only appears in the catalog part number description. This identifier is used for ordering purposes and is not printed on the device package. Check with your Microchip Sales Office for package availability with the Tape and Reel option.

2: Contact Microchip for Automotive grade ordering part numbers.

NOTES:

© 2009-2018 Microchip Technology Inc.

Note the following details of the code protection feature on Microchip devices:

- Microchip products meet the specification contained in their particular Microchip Data Sheet.
- Microchip believes that its family of products is one of the most secure families of its kind on the market today, when used in the intended manner and under normal conditions.
- There are dishonest and possibly illegal methods used to breach the code protection feature. All of these methods, to our knowledge, require using the Microchip products in a manner outside the operating specifications contained in Microchip's Data Sheets. Most likely, the person doing so is engaged in theft of intellectual property.
- Microchip is willing to work with the customer who is concerned about the integrity of their code.
- Neither Microchip nor any other semiconductor manufacturer can guarantee the security of their code. Code protection does not mean that we are guaranteeing the product as "unbreakable."

Code protection is constantly evolving. We at Microchip are committed to continuously improving the code protection features of our products. Attempts to break Microchip's code protection feature may be a violation of the Digital Millennium Copyright Act. If such acts allow unauthorized access to your software or other copyrighted work, you may have a right to sue for relief under that Act.

Information contained in this publication regarding device applications and the like is provided only for your convenience and may be superseded by updates. It is your responsibility to ensure that your application meets with your specifications. MICROCHIP MAKES NO REPRESENTATIONS OR WARRANTIES OF ANY KIND WHETHER EXPRESS OR IMPLIED, WRITTEN OR ORAL, STATUTORY OR OTHERWISE, RELATED TO THE INFORMATION, INCLUDING BUT NOT LIMITED TO ITS CONDITION, QUALITY, PERFORMANCE, MERCHANTABILITY OR FITNESS FOR PURPOSE**.** Microchip disclaims all liability arising from this information and its use. Use of Microchip devices in life support and/or safety applications is entirely at the buyer's risk, and the buyer agrees to defend, indemnify and hold harmless Microchip from any and all damages, claims, suits, or expenses resulting from such use. No licenses are conveyed, implicitly or otherwise, under any Microchip intellectual property rights unless otherwise stated.

Microchip received ISO/TS-16949:2009 certification for its worldwide headquarters, design and wafer fabrication facilities in Chandler and Tempe, Arizona; Gresham, Oregon and design centers in California and India. The Company's quality system processes and procedures are for its PIC® MCUs and dsPIC® DSCs, KEELOQ® code hopping devices, Serial EEPROMs, microperipherals, nonvolatile memory and analog products. In addition, Microchip's quality system for the design and manufacture of development systems is ISO 9001:2000 certified.

QUALITY MANAGEMENT SYSTEM
CERTIFIED BY DNV
═ ISO/TS 16949 ═

Trademarks

The Microchip name and logo, the Microchip logo, AnyRate, AVR, AVR logo, AVR Freaks, BitCloud, chipKIT, chipKIT logo, CryptoMemory, CryptoRF, dsPIC, FlashFlex, flexPWR, Heldo, JukeBlox, KeeLoq, Kleer, LANCheck, LINK MD, maXStylus, maXTouch, MediaLB, megaAVR, MOST, MOST logo, MPLAB, OptoLyzer, PIC, picoPower, PICSTART, PIC32 logo, Prochip Designer, QTouch, SAM-BA, SpyNIC, SST, SST Logo, SuperFlash, tinyAVR, UNI/O, and XMEGA are registered trademarks of Microchip Technology Incorporated in the U.S.A. and other countries.

ClockWorks, The Embedded Control Solutions Company, EtherSynch, Hyper Speed Control, HyperLight Load, IntelliMOS, mTouch, Precision Edge, and Quiet-Wire are registered trademarks of Microchip Technology Incorporated in the U.S.A.

Adjacent Key Suppression, AKS, Analog-for-the-Digital Age, Any Capacitor, AnyIn, AnyOut, BodyCom, CodeGuard, CryptoAuthentication, CryptoAutomotive, CryptoCompanion, CryptoController, dsPICDEM, dsPICDEM.net, Dynamic Average Matching, DAM, ECAN, EtherGREEN, In-Circuit Serial Programming, ICSP, INICnet, Inter-Chip Connectivity, JitterBlocker, KleerNet, KleerNet logo, memBrain, Mindi, MiWi, motorBench, MPASM, MPF, MPLAB Certified logo, MPLIB, MPLINK, MultiTRAK, NetDetach, Omniscient Code Generation, PICDEM, PICDEM.net, PICkit, PICtail, PowerSmart, PureSilicon, QMatrix, REAL ICE, Ripple Blocker, SAM-ICE, Serial Quad I/O, SMART-I.S., SQI, SuperSwitcher, SuperSwitcher II, Total Endurance, TSHARC, USBCheck, VariSense, ViewSpan, WiperLock, Wireless DNA, and ZENA are trademarks of Microchip Technology Incorporated in the U.S.A. and other countries.

SQTP is a service mark of Microchip Technology Incorporated in the U.S.A.

Silicon Storage Technology is a registered trademark of Microchip Technology Inc. in other countries.

GestIC is a registered trademark of Microchip Technology Germany II GmbH & Co. KG, a subsidiary of Microchip Technology Inc., in other countries.

All other trademarks mentioned herein are property of their respective companies.

© 2018, Microchip Technology Incorporated, All Rights Reserved.

ISBN: 978-1-5224-3881-6

Worldwide Sales and Service

AMERICAS

Corporate Office
2355 West Chandler Blvd.
Chandler, AZ 85224-6199
Tel: 480-792-7200
Fax: 480-792-7277
Technical Support:
http://www.microchip.com/support
Web Address:
www.microchip.com

Atlanta
Duluth, GA
Tel: 678-957-9614
Fax: 678-957-1455

Austin, TX
Tel: 512-257-3370

Boston
Westborough, MA
Tel: 774-760-0087
Fax: 774-760-0088

Chicago
Itasca, IL
Tel: 630-285-0071
Fax: 630-285-0075

Dallas
Addison, TX
Tel: 972-818-7423
Fax: 972-818-2924

Detroit
Novi, MI
Tel: 248-848-4000

Houston, TX
Tel: 281-894-5983

Indianapolis
Noblesville, IN
Tel: 317-773-8323
Fax: 317-773-5453
Tel: 317-536-2380

Los Angeles
Mission Viejo, CA
Tel: 949-462-9523
Fax: 949-462-9608
Tel: 951-273-7800

Raleigh, NC
Tel: 919-844-7510

New York, NY
Tel: 631-435-6000

San Jose, CA
Tel: 408-735-9110
Tel: 408-436-4270

Canada - Toronto
Tel: 905-695-1980
Fax: 905-695-2078

ASIA/PACIFIC

Australia - Sydney
Tel: 61-2-9868-6733

China - Beijing
Tel: 86-10-8569-7000

China - Chengdu
Tel: 86-28-8665-5511

China - Chongqing
Tel: 86-23-8980-9588

China - Dongguan
Tel: 86-769-8702-9880

China - Guangzhou
Tel: 86-20-8755-8029

China - Hangzhou
Tel: 86-571-8792-8115

China - Hong Kong SAR
Tel: 852-2943-5100

China - Nanjing
Tel: 86-25-8473-2460

China - Qingdao
Tel: 86-532-8502-7355

China - Shanghai
Tel: 86-21-3326-8000

China - Shenyang
Tel: 86-24-2334-2829

China - Shenzhen
Tel: 86-755-8864-2200

China - Suzhou
Tel: 86-186-6233-1526

China - Wuhan
Tel: 86-27-5980-5300

China - Xian
Tel: 86-29-8833-7252

China - Xiamen
Tel: 86-592-2388138

China - Zhuhai
Tel: 86-756-3210040

ASIA/PACIFIC

India - Bangalore
Tel: 91-80-3090-4444

India - New Delhi
Tel: 91-11-4160-8631

India - Pune
Tel: 91-20-4121-0141

Japan - Osaka
Tel: 81-6-6152-7160

Japan - Tokyo
Tel: 81-3-6880- 3770

Korea - Daegu
Tel: 82-53-744-4301

Korea - Seoul
Tel: 82-2-554-7200

Malaysia - Kuala Lumpur
Tel: 60-3-7651-7906

Malaysia - Penang
Tel: 60-4-227-8870

Philippines - Manila
Tel: 63-2-634-9065

Singapore
Tel: 65-6334-8870

Taiwan - Hsin Chu
Tel: 886-3-577-8366

Taiwan - Kaohsiung
Tel: 886-7-213-7830

Taiwan - Taipei
Tel: 886-2-2508-8600

Thailand - Bangkok
Tel: 66-2-694-1351

Vietnam - Ho Chi Minh
Tel: 84-28-5448-2100

EUROPE

Austria - Wels
Tel: 43-7242-2244-39
Fax: 43-7242-2244-393

Denmark - Copenhagen
Tel: 45-4450-2828
Fax: 45-4485-2829

Finland - Espoo
Tel: 358-9-4520-820

France - Paris
Tel: 33-1-69-53-63-20
Fax: 33-1-69-30-90-79

Germany - Garching
Tel: 49-8931-9700

Germany - Haan
Tel: 49-2129-3766400

Germany - Heilbronn
Tel: 49-7131-67-3636

Germany - Karlsruhe
Tel: 49-721-625370

Germany - Munich
Tel: 49-89-627-144-0
Fax: 49-89-627-144-44

Germany - Rosenheim
Tel: 49-8031-354-560

Israel - Ra'anana
Tel: 972-9-744-7705

Italy - Milan
Tel: 39-0331-742611
Fax: 39-0331-466781

Italy - Padova
Tel: 39-049-7625286

Netherlands - Drunen
Tel: 31-416-690399
Fax: 31-416-690340

Norway - Trondheim
Tel: 47-7288-4388

Poland - Warsaw
Tel: 48-22-3325737

Romania - Bucharest
Tel: 40-21-407-87-50

Spain - Madrid
Tel: 34-91-708-08-90
Fax: 34-91-708-08-91

Sweden - Gothenberg
Tel: 46-31-704-60-40

Sweden - Stockholm
Tel: 46-8-5090-4654

UK - Wokingham
Tel: 44-118-921-5800
Fax: 44-118-921-5820

© 2018 Microchip Technology Inc.

SYST-18KTST181 - Data Sheet - 24AA01/24LC01B/24FC01 Data Sheet

Affected Catalog Part Numbers(CPN)

24AA01-I/MS
24AA01-I/P
24AA01-I/S16K
24AA01-I/SN
24AA01-I/ST
24AA01-I/W16K
24AA01-I/W16K-MIT
24AA01-I/WF16K
24AA01-I/WF16K6
24AA01-I/WIM16K-MIT
24AA01-I/WM16K-MIT
24AA01-I/WMB34
24AA01/SN
24AA01/W15K
24AA014-I/MC
24AA014-I/MS
24AA014-I/P
24AA014-I/SN
24AA014-I/ST
24AA014H-I/MS
24AA014H-I/P
24AA014H-I/SN
24AA014H-I/ST
24AA014HT-I/MNY
24AA014HT-I/MS
24AA014HT-I/SN
24AA014HT-I/ST
24AA014T-I/MC
24AA014T-I/MNY
24AA014T-I/MS
24AA014T-I/OT
24AA014T-I/SN
24AA014T-I/ST
24AA01H-I/MS
24AA01H-I/P
24AA01H-I/S16K
24AA01H-I/SN
24AA01H-I/ST
24AA01H-I/W16K
24AA01H-I/WF16K
24AA01HT-I/LT
24AA01HT-I/MNY

24AA01HT-I/MS
24AA01HT-I/OT
24AA01HT-I/SN
24AA01HT-I/ST
24AA01SC-I/S16K
24AA01SC-I/W16K
24AA01SC-I/WF16K
24AA01T-I/LT
24AA01T-I/MC
24AA01T-I/MNY
24AA01T-I/MS
24AA01T-I/OT
24AA01T-I/OT101
24AA01T-I/OT16KVAO
24AA01T-I/OTB21
24AA01T-I/OTB31
24AA01T-I/OTB32
24AA01T-I/SN
24AA01T-I/SN15KB21
24AA01T-I/SN15KVAO
24AA01T-I/SN16KVAO
24AA01T-I/ST
24AA01T/SN
24LC01B-E/MC
24LC01B-E/MS
24LC01B-E/P
24LC01B-E/SN
24LC01B-E/ST
24LC01B-I/MS
24LC01B-I/P
24LC01B-I/S16K
24LC01B-I/SN
24LC01B-I/ST
24LC01B-I/W16K
24LC01B-I/WF0616KA25
24LC01B-I/WF16K
24LC01B-I/WF16K6
24LC01B-I/WMNBG15K-ADO
24LC01B-I/WNBG15K
24LC01B/P
24LC01B/S
24LC01B/SN
24LC01B/ST
24LC01B/W
24LC01B/W15K
24LC01B/WF
24LC01BH-E/MS

24LC01BH-E/P
24LC01BH-E/SN
24LC01BH-E/ST
24LC01BH-I/MS
24LC01BH-I/P
24LC01BH-I/SN
24LC01BH-I/ST
24LC01BHT-E/LT
24LC01BHT-E/MNY
24LC01BHT-E/MS
24LC01BHT-E/OT
24LC01BHT-E/SN
24LC01BHT-E/ST
24LC01BHT-I/LT
24LC01BHT-I/MNY
24LC01BHT-I/MS
24LC01BHT-I/OT
24LC01BHT-I/SN
24LC01BHT-I/ST
24LC01BT-E/LT
24LC01BT-E/LT16KV03
24LC01BT-E/MC
24LC01BT-E/MNY
24LC01BT-E/MS
24LC01BT-E/OT
24LC01BT-E/OT16KV05
24LC01BT-E/OT16KVAO
24LC01BT-E/SN
24LC01BT-E/SN16KV02
24LC01BT-E/SN16KVAO
24LC01BT-E/ST
24LC01BT-I/LT
24LC01BT-I/MC
24LC01BT-I/MNY
24LC01BT-I/MS
24LC01BT-I/OT
24LC01BT-I/OT105
24LC01BT-I/OT16KV04
24LC01BT-I/OTA24
24LC01BT-I/OTA36
24LC01BT-I/OTG15KVAO
24LC01BT-I/OTRVE
24LC01BT-I/OTVAO
24LC01BT-I/SN
24LC01BT-I/SN15KVAO
24LC01BT-I/SN16KV01
24LC01BT-I/SNA21

24LC01BT-I/SNA23
24LC01BT-I/SNRVE
24LC01BT-I/SNVAO
24LC01BT-I/ST
24LC01BT/OT
24LC01BT/SN
24LC01BT/ST