Product Change Notification - SYST-18ZKDK727

Date:

19 Dec 2018

Product Category:

Microprocessors

Affected CPNs:

Notification subject:

Data Sheet - SAMA5D2 MPU SiP with up to 1Gbit DDR2 or 2Gbit LPDDR2

Notification text:

SYST-18ZKDK727

Microchip has released a new DeviceDoc for the SAMA5D2 MPU SiP with up to 1Gbit DDR2 or 2Gbit LPDDR2 of devices. If you are using one of these devices please read the document located at SAMA5D2 MPU SiP with up to 1Gbit DDR2 or 2Gbit LPDDR2.

Data Sheet - SAMA5D2 MPU SiP with up to 1Gbit DDR2 or 2Gbit LPDDR2

Notification Status: Final

Description of Change:

1) Added 1 Gbit and 2 Gbit LPDDR2 memory options. Added 361-ball TFBGA package option and mechanical drawing.
2) Pinout: added PTC signals.
3) Added section Electrical Characteristics.

Impacts to Data Sheet: None

Reason for Change: To Improve Manufacturability

Change Implementation Status: Complete

Date Document Changes Effective: 19 Dec 2018

NOTE: Please be advised that this is a change to the document only the product has not been changed.

Markings to Distinguish Revised from Unrevised Devices: N/A

Attachment(s):

SAMA5D2 MPU SiP with up to 1Gbit DDR2 or 2Gbit LPDDR2

Please contact your local Microchip sales office with questions or concerns regarding this notification.

Terms and Conditions:

If you wish to receive Microchip PCNs via email please register for our PCN email service at our PCN home page select register then fill in the required fields. You will find instructions about registering for Microchips PCN email service in the PCN FAQ section.
If you wish to change your PCN profile, including opt out, please go to the PCN home page select login and sign into your myMicrochip account. Select a profile option from the left navigation bar and make the applicable selections.

SAMA5D2 System in Package (SiP) MPU with up to 1 Gbit DDR2 SDRAM or 2 Gbit LPDDR2 SDRAM

Scope

This document is an overview of the main features of the SAMA5D2 SIP. The sole reference documents for product information on the SAMA5D2 and the LPDDR2/DDR2-SDRAM memories are listed in the table below.

Introduction

The SAMA5D2 System-In-Package (SIP) integrates the Arm® Cortex®-A5 processor-based SAMA5D2 MPU with up to 1 Gbit DDR2-SDRAM or up to 2 Gbit LPDDR2-SDRAM in a single package.

By combining the high-performance, ultra-low power SAMA5D2 with LPDDR2/DDR2-SDRAM in a single package, PCB routing complexity, area and number of layers is reduced in the majority of cases. This makes board design easier and more robust by facilitating design for EMI, ESD and signal integrity.

DDR2-SDRAM memory sizes and package options available

- 128 Mbit, TFBGA196
- 512 Mbit and 1 Gbit, TFBGA289

LPDDR2-SDRAM memory sizes and package options available

- 1 Gbit and 2 Gbit, TFBGA361

While the smallest option targets applications with a small OS or bare metal, the larger options are suitable for applications using Linux®.

Reference Documents

Type	Document Title	Available	Ref. No.
Data sheet	SAMA5D2 Series	www.microchip.com	DS60001476
Data sheet	2 Mwords × 4 Banks × 16 bits DDR2 SDRAM (128 Mbit)	www.winbond.com	W9712G6KB
Data sheet	8 Mwords × 4 Banks × 16 bits DDR2 SDRAM (512 Mbit)	www.winbond.com	W9751G6KB
Data sheet	8 Mwords × 8 Banks × 16 bits DDR2 SDRAM (1 Gbit)	www.winbond.com	W971GG6SB
Data sheet	4 Mwords × 8 Banks × 32 bits LPDDR2-SDRAM (1 Gbit)	www.apmemory.com	AD2100XXX-

© 2018 Microchip Technology Inc.

.....continued			
Type	**Document Title**	**Available**	**Ref. No.**
Data sheet	8 Mwords × 8 Banks × 32 bits LPDDR2-SDRAM (2 Gbit)	www.apmemory.com	AD2200XXX-

Table of Contents

Scope..... 1

Introduction..... 1

Reference Documents..... 1

1. Features..... 5

2. DDR2-SDRAM Features..... 8

3. LPDDR2-SDRAM Features..... 9

4. Configuration Summary..... 10

5. Chip Identifier..... 11

6. Package and Ballout..... 12

7. Memory..... 40

8. Electrical Characteristics..... 41

8.1. Decoupling..... 41

8.2. Power Sequences..... 41

9. Mechanical Characteristics..... 46

9.1. 361-ball TFBGA..... 46

9.2. 289-ball TFBGA..... 49

9.3. 196-ball TFBGA..... 50

10. Ordering Information..... 51

11. Revision History..... 52

11.1. DS60001484B - 11/2018..... 52

11.2. DS60001484A - 09/2017..... 52

The Microchip Web Site..... 53

Customer Change Notification Service..... 53

Customer Support..... 53

Product Identification System..... 54

Microchip Devices Code Protection Feature..... 54

Legal Notice..... 55

Trademarks..... 55

Quality Management System Certified by DNV.....56

Worldwide Sales and Service.....57

1. Features

- Arm Cortex-A5 core
  - ARMv7-A architecture
  - Arm TrustZone®
  - NEON™ Media Processing Engine
  - Up to 500 MHz
  - ETM/ETB 8 Kbytes
- Memory Architecture
  - Memory Management Unit
  - 32-Kbyte L1 data cache, 32-Kbyte L1 instruction cache
  - 128-Kbyte L2 cache configurable to be used as an internal SRAM
  - DDR2-SDRAM memory up to 1 Gb
  - LPDDR2-SDRAM memory up to 2 Gb
  - One 128-Kbyte scrambled internal SRAM
  - One 160-Kbyte internal ROM
    - 64-Kbyte scrambled and maskable ROM embedding bootloader/Secure bootloader
    - 96-Kbyte unscrambled, unmaskable ROM for NAND Flash BCH ECC table
  - High-bandwidth scramblable 16-bit Double Data Rate (DDR) multiport dynamic RAM controller supporting Winbond DDR2-SDRAM up to 1 Gb, including “on-the-fly” encryption/ decryption path
  - High-bandwidth scramblable 32-bit Double Data Rate (DDR) multiport dynamic RAM controller supporting AP memory LPDDR2-SDRAM up to 2 Gb , including “on-the-fly” encryption/ decryption path
  - 8-bit SLC/MLC NAND controller, with up to 32-bit Error Correcting Code (PMECC)
- System Running up to 166 MHz
  - Reset controller, shutdown controller, periodic interval timer, independent watchdog timer and secure Real-Time Clock (RTC) with clock calibration
  - One 600 to 1200 MHz PLL for the system and one 480 MHz PLL optimized for USB high speed
  - Digital fractional PLL for audio (11.2896 MHz and 12.288 MHz)
  - Internal low-power 12 MHz RC and 32 KHz typical RC
  - Selectable 32.768-Hz low-power oscillator and 8 to 24 MHz oscillator
  - 51 DMA Channels including two 16-channel 64-bit Central DMA Controllers
  - 64-bit Advanced Interrupt Controller (AIC)
  - 64-bit Secure Advanced Interrupt Controller (SAIC)
  - Three programmable external clock signals
- Low-Power Modes
  - Ultra-Low-Power mode with fast wake-up capability
  - Low-Power Backup mode with 5-Kbyte SRAM and SleepWalking™ features
    - Wake-up from up to nine wake-up pins, UART reception, analog comparison
    - Fast wake-up capability
    - Extended Backup mode with LPDDR2/DDR2-SDRAM in Self-Refresh mode

- Peripherals
  - LCD TFT controller up to 1024x768, with four overlays, rotation, post-processing and alpha blending, 24-bit parallel RGB
  - ITU-R BT. 601/656/1120 Image Sensor Controller (ISC) supporting up to 5 M-pixel sensors with a parallel 12-bit interface for Raw Bayer, YCbCr, Monochrome and JPEG-compressed sensor interface
  - Two Synchronous Serial Controllers (SSC), two Inter-IC Sound Controllers (I2SC), and one Stereo Class D amplifier
  - One Peripheral Touch Controller (PTC) with up to 8 X-lines and 8 Y-lines (64-channel capacitive touch)
  - One Pulse Density Modulation Interface Controller (PDMIC)
  - One USB high-speed device port (UDPHS) and one USB high-speed host port or two USB high-speed host ports (UHPHS)
  - One USB high-speed host port with a High-Speed Inter-Chip (HSIC) interface
  - One 10/100 Ethernet MAC (GMAC)
    - Energy efficiency support (IEEE 802.3az standard)
    - Ethernet AVB support with IEEE802.1AS time stamping
    - IEEE®802.1Qav credit-based traffic-shaping hardware support
    - IEEE1588 Precision Time Protocol (PTP)
  - Two high-speed memory card hosts:
    - SDMMC0: SD 3.0, eMMC 4.51, 8 bits
    - SDMMC1: SD 2.0, eMMC 4.41, 4 bits only
  - Two master/slave Serial Peripheral Interfaces (SPI)
  - Two Quad Serial Peripheral Interfaces (QSPI)
  - Five FLEXCOMs (USART, SPI and TWI)
  - Five UARTs
  - Two master CAN-FD (MCAN) controllers with SRAM-based mailboxes, and time- and event-triggered transmission

    WARNING MCAN implements the non-ISO CAN FD frame format and therefore does not pass the CAN FD Conformance Test according to ISO 16845-1:2016.

  - One Rx only UART in backup area (RXLP)
  - One analog comparator (ACC) in backup area
  - Two 2-wire interfaces (TWIHS) up to 400 Kbits/s supporting the I^2C protocol and SMBUS (TWIHS)
  - Two 3-channel 32-bit Timer/Counters (TC), supporting basic PWM modes
  - One full-featured 4-channel 16-bit Pulse Width Modulation (PWM) controller
  - One 12-channel, 12-bit, Analog-to-Digital Converter (ADC) with Resistive TouchScreen capability
- Safety
  - Zero-power Power-On Reset (POR) cells
  - Main crystal clock failure detector
  - Write-protected registers

  - Integrity Check Monitor (ICM) based on SHA256
  - Memory Management Unit
  - Independent watchdog
- Security
  - 5 Kbytes of internal scrambled SRAM:
    - 1 Kbyte non-erasable on tamper detection
    - 4 Kbytes erasable on tamper detection
  - 256 bits of scrambled and erasable registers
  - Up to eight tamper pins for static or dynamic intrusion detections[(1)]
  - Environmental monitors on specific versions: temperature, voltage, frequency and active die shield[(2)]
  - Secure Boot Loader[(3)]
  - On-the-fly AES encryption/decryption on LPDDR2/DDR2-SDRAM and QSPI memories (AESB)
  - RTC including time-stamping on security intrusions
  - Programmable fuse box with 544 fuse bits (including JTAG protection and BMS)
- Hardware cryptography
  - SHA (SHA1, SHA224, SHA256, SHA384, SHA512): compliant with FIPS PUB 180-2
  - AES: 256-, 192-, 128-bit key algorithm, compliant with FIPS PUB 197
  - TDES: two-key or three-key algorithms, compliant with FIPS PUB 46-3
  - True Random Number Generator (TRNG) compliant with NIST Special Publication 800-22 Test Suite and FIPS PUBs 140-2 and 140-3
- Up to 128 I/Os
  - Fully programmable through set/clear registers
  - Multiplexing of up to eight peripheral functions per I/O line
  - Each I/O line can be assigned to a peripheral or used as a general purpose I/O
  - PIO controller features a synchronous output providing up to 32 bits of data output in one write operation

Note:

1. For information specific to dynamic tamper protection (PIOBU), refer to the document *SAMA5D2 External Tamper Protections* (document no. 44095).
2. For environmental monitors, refer to the document *SAMA5D23 and SAMA5D28 Environmental Monitors* (document no. 44036), available under Non-Disclosure Agreement (NDA). Contact a Microchip sales representative for details.
3. For secure boot strategies, refer to the document *SAMA5D2 Series Secure Boot Strategy* (document no. 44040), available under Non-Disclosure Agreement (NDA). Contact a Microchip sales representative for details.

2. DDR2-SDRAM Features

- Power Supply: DDRM_VDD, DDRM_VDDL, DDRM_VDDQ = 1.8 V ±0.1 V
- Double Data Rate Architecture: Two Data Transfers per Clock Cycle
- CAS Latency: 3
- Burst Length: 8
- Bi-Directional, Differential Data Strobes (DQS and DQSN) are Transmitted/Received with Data
- Edge-Aligned with Read Data and Center-Aligned with Write Data
- DLL Aligns DQ and DQS Transitions with Clock
- Differential Clock Inputs (CLK and CLKN)
- Data Masks (DM) for Write Data
- Commands Entered on Each Positive CLK Edge, Data and Data Mask are Referenced to Both Edges of DQS
- Auto-Refresh and Self-Refresh Modes
- Precharged Power-Down and Active Power-Down
- Write Data Mask
- Write Latency = Read Latency - 1 (WL = RL - 1)
- Interface: SSTL_18

3. LPDDR2-SDRAM Features

- Power Supply: DDRM_VDD18 = 1.7 to 1.9V
- Power Supply: DDRM_VDD12 = 1.14 to 1.3V
- Double Data Rate Architecture: Two Data Transfers per Clock Cycle
- Burst Length (BL): 4, 8, 16
- Write Latency (WL): 1, 2, 3, 4
- Read Latency (RL): 3, 4, 5, 6, 7, 8
- Bi-Directional, Differential Data Strobes (DQS and DQSN) are Transmitted/Received with Data
- Edge-Aligned with Read Data and Center-Aligned with Write Data
- Differential Clock Inputs (CLK and CLKN)
- Data Masks (DM) for Write Data
- Commands Entered on each Positive CLK Edge, Data and Data Mask are Referenced to Both Edges of DQS
- Interface: HSUL_12
- Auto-Refresh and Self-Refresh Modes
- Low Power Consumption
- JEDEC LPDDR2-S4B Compliance
- Partial Array Self-Refresh (PASR)
- Auto Temperature Compensated Self-Refresh (ATCSR) by Built-in Temperature Sensor
- Deep Power-Down Mode

4. Configuration Summary

Table 4-1. Configuration Summary

Feature	SAMA5D225	SAMA5D27				SAMA5D28		
Package	TFBGA196	TFBGA289		TFBGA361		TFBGA289	TFBGA361	
DDR2-SDRAM	128 Mb	512 Mb	1 Gb	–	–	1 Gb	–	–
LPDDR2-SDRAM	–	–	–	1 Gb	2 Gb	–	1 Gb	2 Gb
SMC	Up to 16-bit							
Internal Memory Bus Width	16-bit			32-bit		16-bit	32-bit	
PIOs	90	128						
SRAM	128 Kbytes							
QSPI	2							
LCD	24-bit RGB							
Camera Interface (ISC)	1							
EMAC	1							
PTC	4 X-lines x 8 Y-lines	8 X-lines x 8 Y-lines						
CAN	1	2						
USB	2 (2 Hosts or 1 Host/1 Device)	3 (2 Hosts/1 HSIC or 1 Host/1 Device/1 HSIC)						
UART/SPI/I^2C	9 / 7 / 7	10 / 7 / 7						
SDIO/SD/MMC	2							
I^2S/SSC/Class D/PDM	2 / 2 / 1 / 1							
ADC Inputs	5	12						
Timers	5	6						
PWM	4 (PWM) + 5 (TC)	4 (PWM) + 6 (TC)						
Tamper Pins	6	8						
AESB	Yes							
Environmental Monitors, Die Shield	–	–		–		Yes		

5. Chip Identifier

Table 5-1. SAMA5D2 SIP Chip ID Registers

Chip Name	CHIPID_CIDR	CHIPID_EXID
SAMA5D225C-D1M	0x8A5C08C2	0x00000053
SAMA5D27C-D5M		0x00000032
SAMA5D27C-D1G		0x00000033
SAMA5D27C-LD1G		0x00000061
SAMA5D27C-LD2G		0x00000062
SAMA5D28C-D1G		0x00000013
SAMA5D28C-LD1G		0x00000071
SAMA5D28C-LD2G		0x00000072

6. Package and Ballout

The SAMA5D2 SIP is available in the packages listed below.

Important: SAMA5D2 DDR2 SIP devices are not pin-to-pin compatible with SAMA5D2 devices.

Table 6-1. Packages

Package Name	Ball Count	Ball Pitch	Package Size
TFBGA196	196	0.75 mm	11 x 11 (mm)
TFBGA289[(1)]	289	0.8 mm	14 x 14 (mm)
TFBGA361[(2)]	361	0.8 mm	16 x 16 (mm)

Note:

1. 512 Mbit and 1 Gbit DDR2 in TFBGA289 have the same ballout.
2. 1 Gbit and 2 Gbit LPDDR2 in TFBGA361 have the same ballout.

Table 6-2. Ball Description

361-ball BGA	289-ball BGA	196-ball BGA	Power Rail	I/O Type	Primary		Alternate		PIO Peripheral				Reset State (Signal, Dir, PU, PD, HiZ, ST)(1)
					Signal	Dir	Signal	Dir	Func	Signal	Dir	IO Set	
W11	U13	M8	VDDSDMMC	GPIO_EMMC	PA0	I/O	–	–	A	SDMMC0_CK	I/O	1	PIO, I, PU, ST
									B	QSPI0_SCK	O	1	
									F	D0	I/O	2	
R9	N7	F7	VDDSDMMC	GPIO_EMMC	PA1	I/O	–	–	A	SDMMC0_CMD	I/O	1	PIO, I, PU, ST
									B	QSPI0_CS	O	1	
									F	D1	I/O	2	
W12	U14	L8	VDDSDMMC	GPIO_EMMC	PA2	I/O	–	–	A	SDMMC0_DAT0	I/O	1	PIO, I, PU, ST
									B	QSPI0_IO0	I/O	1	
									F	D2	I/O	2	
V11	T13	G8	VDDSDMMC	GPIO_EMMC	PA3	I/O	–	–	A	SDMMC0_DAT1	I/O	1	PIO, I, PU, ST
									B	QSPI0_IO1	I/O	1	
									F	D3	I/O	2	
W14	U15	K8	VDDSDMMC	GPIO_EMMC	PA4	I/O	–	–	A	SDMMC0_DAT2	I/O	1	PIO, I, PU, ST
									B	QSPI0_IO2	I/O	1	
									F	D4	I/O	2	
V10	U16	P9	VDDSDMMC	GGPIO_EMMC	PA5	I/O	–	–	A	SDMMC0_DAT3	I/O	1	PIO, I, PU, ST
									B	QSPI0_IO3	I/O	1	
									F	D5	I/O	2	
W15	U17	P10	VDDSDMMC	GPIO_EMMC	PA6	I/O	–	–	A	SDMMC0_DAT4	I/O	1	PIO, I, PU, ST
									B	QSPI1_SCK	O	1	
									D	TIOA5	I/O	1	
									E	FLEXCOM2_IO0	I/O	1	
									F	D6	I/O	2	
W16	R11	P11	VDDSDMMC	GPIO_EMMC	PA7	I/O	–	–	A	SDMMC0_DAT5	I/O	1	PIO, I, PU, ST
									B	QSPI1_IO0	I/O	1	
									D	TIOB5	I/O	1	
									E	FLEXCOM2_IO1	I/O	1	
									F	D7	I/O	2	

.....continued

361-ball BGA	289-ball BGA	196-ball BGA	Power Rail	I/O Type	Primary		Alternate		PIO Peripheral				Reset State (Signal, Dir, PU, PD, HiZ, ST)(1)
					Signal	Dir	Signal	Dir	Func	Signal	Dir	IO Set	
V12	R9	K9	VDDSDMMC	GPIO_EMMC	PA8	I/O	–	–	A	SDMMC0_DAT6	I/O	1	PIO, I, PU, ST
									B	QSPI1_IO1	I/O	1	
									D	TCLK5	I	1	
									E	FLEXCOM2_IO2	I/O	1	
									F	NWE/NANDWE	O	2	
V16	P8	J9	VDDSDMMC	GPIO_EMMC	PA9	I/O	–	–	A	SDMMC0_DAT7	I/O	1	PIO, I, PU, ST
									B	QSPI1_IO2	I/O	1	
									D	TIOA4	I/O	1	
									E	FLEXCOM2_IO3	O	1	
									F	NCS3	O	2	
V14	R10	N14	VDDSDMMC	GPIO_EMMC	PA10	I/O	–	–	A	SDMMC0_RSTN	O	1	PIO, I, PU, ST
									B	QSPI1_IO3	I/O	1	
									D	TIOB4	I/O	1	
									E	FLEXCOM2_IO4	O	1	
									F	A21/NANDALE	O	2	
L18	P15	N13	VDDIOP1	GPIO	PA11	I/O	–	–	A	SDMMC0_1V8SEL	O	1	PIO, I, PU, ST
									B	QSPI1_CS	O	1	
									D	TCLK4	I	1	
									F	A22/NANDCLE	O	2	
T16	N17	L12	VDDIOP1	GPIO	PA12	I/O	–	–	A	SDMMC0_WP	I	1	PIO, I, PU, ST
									B	IRQ	I	1	
									F	NRD/NANDOE	O	2	
K18	P16	M14	VDDIOP1	GPIO	PA13	I/O	–	–	A	SDMMC0_CD	I	1	PIO, I, PU, ST
									E	FLEXCOM3_IO1	I/O	1	
									F	D8	I/O	2	
R19	M17	J10	VDDIOP1	GPIO_QSPI	PA14	I/O	–	–	A	SPI0_SPCK	I/O	1	PIO, I, PU, ST
									B	TK1	I/O	1	
									C	QSPI0_SCK	O	2	
									D	I2SC1_MCK	O	2	
									E	FLEXCOM3_IO2	I/O	1	
									F	D9	I/O	2	

.....continued

361-ball BGA	289-ball BGA	196-ball BGA	Power Rail	I/O Type	Primary		Alternate		PIO Peripheral				Reset State (Signal, Dir, PU, PD, HiZ, ST)(1)
					Signal	Dir	Signal	Dir	Func	Signal	Dir	IO Set	
L17	N16	L14	VDDIOP1	GPIO	PA15	I/O	–	–	A	SPI0_MOSI	I/O	1	PIO, I, PU, ST
									B	TF1	I/O	1	
									C	QSPI0_CS	O	2	
									D	I2SC1_CK	I/O	2	
									E	FLEXCOM3_IO0	I/O	1	
									F	D10	I/O	2	
N19	M11	H14	VDDIOP1	GPIO_IO	PA16	I/O	–	–	A	SPI0_MISO	I/O	1	PIO, I, PU, ST
									B	TD1	O	1	
									C	QSPI0_IO0	I/O	2	
									D	I2SC1_WS	I/O	2	
									E	FLEXCOM3_IO3	O	1	
									F	D11	I/O	2	
M16	N14	K14	VDDIOP1	GPIO_IO	PA17	I/O	–	–	A	SPI0_NPCS0	I/O	1	PIO, I, PU, ST
									B	RD1	I	1	
									C	QSPI0_IO1	I/O	2	
									D	I2SC1_DI0	I	2	
									E	FLEXCOM3_IO4	O	1	
									F	D12	I/O	2	
V19	T16	L9	VDDIOP1	GPIO_IO	PA18	I/O	–	–	A	SPI0_NPCS1	O	1	PIO, I, PU, ST
									B	RK1	I/O	1	
									C	QSPI0_IO2	I/O	2	
									D	I2SC1_DO0	O	2	
									E	SDMMC1_DAT0	I/O	1	
									F	D13	I/O	2	
V15	T15	P12	VDDIOP1	GPIO_IO	PA19	I/O	–	–	A	SPI0_NPCS2	O	1	PIO, I, PU, ST
									B	RF1	I/O	1	
									C	QSPI0_IO3	I/O	2	
									D	TIOA0	I/O	1	
									E	SDMMC1_DAT1	I/O	1	
									F	D14	I/O	2	

© 2018 Microchip Technology Inc.

.....continued

361-ball BGA	289-ball BGA	196-ball BGA	Power Rail	I/O Type	Primary		Alternate		PIO Peripheral				Reset State (Signal, Dir, PU, PD, HiZ, ST)(1)
					Signal	Dir	Signal	Dir	Func	Signal	Dir	IO Set	
T10	P9	H9	VDDIOP1	GPIO_IO	PA20	I/O	–	–	A	SPI0_NPCS3	O	1	PIO, I, PU, ST
									D	TIOB0	I/O	1	
									E	SDMMC1_DAT2	I/O	1	
									F	D15	I/O	2	
U19	P10	G9	VDDIOP1	GPIO_IO	PA21	I/O	–	–	A	IRQ	I	2	PIO, I, PU, ST
									B	PCK2	O	3	
									D	TCLK0	I	1	
									E	SDMMC1_DAT3	I/O	1	
									F	NANDRDY	I	2	
V17	T17	K10	VDDIOP1	GPIO_QSPI	PA22	I/O	–	–	A	FLEXCOM1_IO2	I/O	1	PIO, I, PU, ST
									B	D0	I/O	1	
									C	TCK	I	4	
									D	SPI1_SPCK	I/O	2	
									E	SDMMC1_CK	I/O	1	
									F	QSPI0_SCK	O	3	
U18	T14	G10	VDDIOP1	GPIO	PA23	I/O	–	–	A	FLEXCOM1_IO1	I/O	1	PIO, I, PU, ST
									B	D1	I/O	1	
									C	TDI	I	4	
									D	SPI1_MOSI	I/O	2	
									F	QSPI0_CS	O	3	
W17	R17	P13	VDDIOP1	GPIO_IO	PA24	I/O	–	–	A	FLEXCOM1_IO0	I/O	1	PIO, I, PU, ST
									B	D2	I/O	1	
									C	TDO	O	4	
									D	SPI1_MISO	I/O	2	
									F	QSPI0_IO0	I/O	3	
W18	R16	H10	VDDIOP1	GPIO_IO	PA25	I/O	–	–	A	FLEXCOM1_IO3	O	1	PIO, I, PU, ST
									B	D3	I/O	1	
									C	TMS	I	4	
									D	SPI1_NPCS0	I/O	2	
									F	QSPI0_IO1	I/O	3	

.....continued

361-ball BGA	289-ball BGA	196-ball BGA	Power Rail	I/O Type	Primary		Alternate		PIO Peripheral				Reset State (Signal, Dir, PU, PD, HiZ, ST)(1)
					Signal	Dir	Signal	Dir	Func	Signal	Dir	IO Set	
U14	P17	L10	VDDIOP1	GPIO_IO	PA26	I/O	–	–	A	FLEXCOM1_IO4	O	1	PIO, I, PU, ST
									B	D4	I/O	1	
									C	NTRST	I	4	
									D	SPI1_NPCS1	O	2	
									F	QSPI0_IO2	I/O	3	
M18	R15	P14	VDDIOP1	GPIO_IO	PA27	I/O	–	–	A	TIOA1	I/O	2	PIO, I, PU, ST
									B	D5	I/O	1	
									C	SPI0_NPCS2	O	2	
									D	SPI1_NPCS2	O	2	
									E	SDMMC1_RSTN	O	1	
									F	QSPI0_IO3	I/O	3	
U13	R14	N12	VDDIOP1	GPIO	PA28	I/O	–	–	A	TIOB1	I/O	2	PIO, I, PU, ST
									B	D6	I/O	1	
									C	SPI0_NPCS3	O	2	
									D	SPI1_NPCS3	O	2	
									E	SDMMC1_CMD	I/O	1	
									F	CLASSD_L0	O	1	
U16	P14	M12	VDDIOP1	GPIO	PA29	I/O	–	–	A	TCLK1	I	2	PIO, I, PU, ST
									B	D7	I/O	1	
									C	SPI0_NPCS1	O	2	
									E	SDMMC1_WP	I	1	
									F	CLASSD_L1	O	1	
U12	R13	N11	VDDIOP1	GPIO	PA30	I/O	–	–	B	NWE/NANDWE	O	1	PIO, I, PU, ST
									C	SPI0_NPCS0	I/O	2	
									D	PWMH0	O	1	
									E	SDMMC1_CD	I	1	
									F	CLASSD_L2	O	1	
U17	P13	M11	VDDIOP1	GPIO	PA31	I/O	–	–	B	NCS3	O	1	PIO, I, PU, ST
									C	SPI0_MISO	I/O	2	
									D	PWML0	O	1	
									F	CLASSD_L3	O	1	

.....continued

361-ball BGA	289-ball BGA	196-ball BGA	Power Rail	I/O Type	Primary		Alternate		PIO Peripheral				Reset State (Signal, Dir, PU, PD, HiZ, ST)(1)
					Signal	Dir	Signal	Dir	Func	Signal	Dir	IO Set	
C7	F5	E6	VDDIOP0	GPIO	PB0	I/O	–	–	B	A21/NANDALE	O	1	PIO, I, PU, ST
									C	SPI0_MOSI	I/O	2	
									D	PWMH1	O	1	
A9	C8	D6	VDDIOP0	GPIO	PB1	I/O	–	–	B	A22/NANDCLE	O	1	PIO, I, PU, ST
									C	SPI0_SPCK	I/O	2	
									D	PWML1	O	1	
									F	CLASSD_R0	O	1	
A10	C7	C6	VDDIOP0	GPIO	PB2	I/O	–	–	B	NRD/NANDOE	O	1	PIO, I, PU, ST
									D	PWMFI0	I	1	
									F	CLASSD_R1	O	1	
A11	B8	C5	VDDIOP0	GPIO	PB3	I/O	–	–	A	URXD4	I	1	PIO, I, PU, ST
									B	D8	I/O	1	
									C	IRQ	I	3	
									D	PWMEXTRG1	I	1	
									F	CLASSD_R2	O	1	
A12	B7	D5	VDDIOP0	GPIO	PB4	I/O	–	–	A	UTXD4	O	1	PIO, I, PU, ST
									B	D9	I/O	1	
									C	FIQ	I	4	
									F	CLASSD_R3	O	1	
A7	A10	D7	VDDIOP0	GPIO_QSPI	PB5	I/O	–	–	A	TCLK2	I	1	PIO, I, PU, ST
									B	D10	I/O	1	
									C	PWMH2	O	1	
									D	QSPI1_SCK	O	2	
									F	GTSUCOMP	O	3	
B7	A9	C8	VDDIOP0	GPIO	PB6	I/O	–	–	A	TIOA2	I/O	1	PIO, I, PU, ST
									B	D11	I/O	1	
									C	PWML2	O	1	
									D	QSPI1_CS	O	2	
									F	GTXER	O	3	

.....continued

361-ball BGA	289-ball BGA	196-ball BGA	Power Rail	I/O Type	Primary		Alternate		PIO Peripheral				Reset State (Signal, Dir, PU, PD, HiZ, ST)(1)
					Signal	Dir	Signal	Dir	Func	Signal	Dir	IO Set	
C5	D5	D9	VDDIOP0	GPIO_IO	PB7	I/O	–	–	A	TIOB2	I/O	1	PIO, I, PU, ST
									B	D12	I/O	1	
									C	PWMH3	O	1	
									D	QSPI1_IO0	I/O	2	
									F	GRXCK	I	3	
B8	E5	C7	VDDIOP0	GPIO_IO	PB8	I/O	–	–	A	TCLK3	I	1	PIO, I, PU, ST
									B	D13	I/O	1	
									C	PWML3	O	1	
									D	QSPI1_IO1	I/O	2	
									F	GCRS	I	3	
B6	C6	C9	VDDIOP0	GPIO_IO	PB9	I/O	–	–	A	TIOA3	I/O	1	PIO, I, PU, ST
									B	D14	I/O	1	
									C	PWMFI1	I	1	
									D	QSPI1_IO2	I/O	2	
									F	GCOL	I	3	
G6	A8	F6	VDDIOP0	GPIO_IO	PB10	I/O	–	–	A	TIOB3	I/O	1	PIO, I, PU, ST
									B	D15	I/O	1	
									C	PWMEXTRG2	I	1	
									D	QSPI1_IO3	I/O	2	
									F	GRX2	I	3	
B5	A7	B9	VDDIOP0	GPIO	PB11	I/O	–	–	A	LCDDAT0	O	1	PIO, I, PU, ST
									B	A0/NBS0	O	1	
									C	URXD3	I	3	
									D	PDMIC_DAT		2	
									F	GRX3	I	3	
A6	B6	B8	VDDIOP0	GPIO	PB12	I/O	–	–	A	LCDDAT1	O	1	PIO, I, PU, ST
									B	A1	O	1	
									C	UTXD3	O	3	
									D	PDMIC_CLK		2	
									F	GTX2	O	3	

.....continued

361-ball BGA	289-ball BGA	196-ball BGA	Power Rail	I/O Type	Primary		Alternate		PIO Peripheral				Reset State (Signal, Dir, PU, PD, HiZ, ST)(1)
					Signal	Dir	Signal	Dir	Func	Signal	Dir	IO Set	
C4	C5	B7	VDDIOP0	GPIO	PB13	I/O	–	–	A	LCDDAT2	O	1	PIO, I, PU, ST
									B	A2	O	1	
									C	PCK1	O	3	
									F	GTX3	O	3	
G4	A6	G6	VDDIOP0	GPIO_QSPI	PB14	I/O	–	–	A	LCDDAT3	O	1	PIO, I, PU, ST
									B	A3	O	1	
									C	TK1	I/O	2	
									D	I2SC1_MCK	O	1	
									E	QSPI1_SCK	O	3	
									F	GTXCK	I/O	3	
H4	E4	B5	VDDIOP0	GPIO	PB15	I/O	–	–	A	LCDDAT4	O	1	PIO, I, PU, ST
									B	A4	O	1	
									C	TF1	I/O	2	
									D	I2SC1_CK	I/O	1	
									E	QSPI1_CS	O	3	
									F	GTXEN	O	3	
A4	B5	C4	VDDIOP0	GPIO_IO	PB16	I/O	–	–	A	LCDDAT5	O	1	PIO, I, PU, ST
									B	A5	O	1	
									C	TD1	O	2	
									D	I2SC1_WS	I/O	1	
									E	QSPI1_IO0	I/O	3	
									F	GRXDV	I	3	
B3	C4	A5	VDDIOP0	GPIO_IO	PB17	I/O	–	–	A	LCDDAT6	O	1	PIO, I, PU, ST
									B	A6	O	1	
									C	RD1	I	2	
									D	I2SC1_DI0	I	1	
									E	QSPI1_IO1	I/O	3	
									F	GRXER	I	3	

© 2018 Microchip Technology Inc.

.....continued

361-ball BGA	289-ball BGA	196-ball BGA	Power Rail	I/O Type	Primary		Alternate		PIO Peripheral				Reset State (Signal, Dir, PU, PD, HiZ, ST)(1)
					Signal	Dir	Signal	Dir	Func	Signal	Dir	IO Set	
D3	A5	B4	VDDIOP0	GPIO_IO	PB18	I/O	–	–	A	LCDDAT7	O	1	PIO, I, PU, ST
									B	A7	O	1	
									C	RK1	I/O	2	
									D	I2SC1_DO0	O	1	
									E	QSPI1_IO2	I/O	3	
									F	GRX0	I	3	
F4	B4	A6	VDDIOP0	GPIO_IO	PB19	I/O	–	–	A	LCDDAT8	O	1	PIO, I, PU, ST
									B	A8	O	1	
									C	RF1	I/O	2	
									D	TIOA3	I/O	2	
									E	QSPI1_IO3	I/O	3	
									F	GRX1	I	3	
F2	A4	A4	VDDIOP0	GPIO	PB20	I/O	–	–	A	LCDDAT9	O	1	PIO, I, PU, ST
									B	A9	O	1	
									C	TK0	I/O	1	
									D	TIOB3	I/O	2	
									E	PCK1	O	4	
									F	GTX0	O	3	
F3	D3	A3	VDDIOP0	GPIO	PB21	I/O	–	–	A	LCDDAT10	O	1	PIO, I, PU, ST
									B	A10	O	1	
									C	TF0	I/O	1	
									D	TCLK3	I	2	
									E	FLEXCOM3_IO2	I/O	3	
									F	GTX1	O	3	
E4	C3	D3	VDDIOP0	GPIO	PB22	I/O	–	–	A	LCDDAT11	O	1	PIO, I, PU, ST
									B	A11	O	1	
									C	TD0	O	1	
									D	TIOA2	I/O	2	
									E	FLEXCOM3_IO1	I/O	3	
									F	GMDC	O	3	

© 2018 Microchip Technology Inc.

.....continued

361-ball BGA	289-ball BGA	196-ball BGA	Power Rail	I/O Type	Primary		Alternate		PIO Peripheral				Reset State (Signal, Dir, PU, PD, HiZ, ST)(1)
					Signal	Dir	Signal	Dir	Func	Signal	Dir	IO Set	
H2	B3	B2	VDDIOP0	GPIO	PB23	I/O	–	–	A	LCDDAT12	O	1	PIO, I, PU, ST
									B	A12	O	1	
									C	RD0	I	1	
									D	TIOB2	I/O	2	
									E	FLEXCOM3_IO0	I/O	3	
									F	GMDIO	I/O	3	
A3	E2	E3	VDDIOP0	GPIO	PB24	I/O	–	–	A	LCDDAT13	O	1	PIO, I, PU, ST
									B	A13	O	1	
									C	RK0	I/O	1	
									D	TCLK2	I	2	
									E	FLEXCOM3_IO3	O	3	
									F	ISC_D10	I	3	
H1	A3	E2	VDDIOP0	GPIO	PB25	I/O	–	–	A	LCDDAT14	O	1	PIO, I, PU, ST
									B	A14	O	1	
									C	RF0	I/O	1	
									E	FLEXCOM3_IO4	O	3	
									F	ISC_D11	I	3	
G2	G3	D4	VDDIOP0	GPIO	PB26	I/O	–	–	A	LCDDAT15	O	1	PIO, I, PU, ST
									B	A15	O	1	
									C	URXD0	I	1	
									D	PDMIC_DAT		1	
									F	ISC_D0	I	3	
H5	F4	C3	VDDIOP0	GPIO	PB27	I/O	–	–	A	LCDDAT16	O	1	PIO, I, PU, ST
									B	A16	O	1	
									C	UTXD0	O	1	
									D	PDMIC_CLK		1	
									F	ISC_D1	I	3	

.....continued

361-ball BGA	289-ball BGA	196-ball BGA	Power Rail	I/O Type	Primary		Alternate		PIO Peripheral				Reset State (Signal, Dir, PU, PD, HiZ, ST)(1)
					Signal	Dir	Signal	Dir	Func	Signal	Dir	IO Set	
J2	D2	D2	VDDIOP0	GPIO	PB28	I/O	–	–	A	LCDDAT17	O	1	PIO, I, PU, ST
									B	A17	O	1	
									C	FLEXCOM0_IO0	I/O	1	
									D	TIOA5	I/O	2	
									F	ISC_D2	I	3	
J3	G8	B3	VDDIOP0	GPIO	PB29	I/O	–	–	A	LCDDAT18	O	1	PIO, I, PU, ST
									B	A18	O	1	
									C	FLEXCOM0_IO1	I/O	1	
									D	TIOB5	I/O	2	
									F	ISC_D3	I	3	
A2	C2	F3	VDDIOP0	GPIO	PB30	I/O	–	–	A	LCDDAT19	O	1	PIO, I, PU, ST
									B	A19	O	1	
									C	FLEXCOM0_IO2	I/O	1	
									D	TCLK5	I	2	
									F	ISC_D4	I	3	
J4	G7	A2	VDDIOP0	GPIO	PB31	I/O	–	–	A	LCDDAT20	O	1	PIO, I, PU, ST
									B	A20	O	1	
									C	FLEXCOM0_IO3	O	1	
									D	TWD0	I/O	1	
									F	ISC_D5	I	3	
T14	N10	L13	VDDIOP1	GPIO	PC0	I/O	–	–	A	LCDDAT21	O	1	PIO, I, PU, ST
									B	A23	O	1	
									C	FLEXCOM0_IO4	O	1	
									D	TWCK0	I/O	1	
									F	ISC_D6	I	3	
R16	N11	H11	VDDIOP1	GPIO	PC1	I/O	–	–	A	LCDDAT22	O	1	PIO, I, PU, ST
									B	A24	O	1	
									C	CANTX0	O	1	
									D	SPI1_SPCK	I/O	1	
									E	I2SC0_CK	I/O	1	
									F	ISC_D7	I	3	

.....continued

361-ball BGA	289-ball BGA	196-ball BGA	Power Rail	I/O Type	Primary		Alternate		PIO Peripheral				Reset State (Signal, Dir, PU, PD, HiZ, ST)(1)
					Signal	Dir	Signal	Dir	Func	Signal	Dir	IO Set	
T15	N9	L11	VDDIOP1	GPIO	PC2	I/O	–	–	A	LCDDAT23	O	1	PIO, I, PU, ST
									B	A25	O	1	
									C	CANRX0	I	1	
									D	SPI1_MOSI	I/O	1	
									E	I2SC0_MCK	O	1	
									F	ISC_D8	I	3	
T13	M10	F13	VDDIOP1	GPIO	PC3	I/O	–	–	A	LCDPWM	O	1	PIO, I, PU, ST
									B	NWAIT	I	1	
									C	TIOA1	I/O	1	
									D	SPI1_MISO	I/O	1	
									E	I2SC0_WS	I/O	1	
									F	ISC_D9	I	3	
P16	N15	G14	VDDIOP1	GPIO	PC4	I/O	–	–	A	LCDDISP	O	1	PIO, I, PU, ST
									B	NWR1/NBS1	O	1	
									C	TIOB1	I/O	1	
									D	SPI1_NPCS0	I/O	1	
									E	I2SC0_DI0	I	1	
									F	ISC_PCK	I	3	
L19	M16	J14	VDDIOP1	GPIO	PC5	I/O	–	–	A	LCDVSYNC	O	1	PIO, I, PU, ST
									B	NCS0	O	1	
									C	TCLK1	I	1	
									D	SPI1_NPCS1	O	1	
									E	I2SC0_DO0	O	1	
									F	ISC_VSYNC	I	3	
R15	L11	J13	VDDIOP1	GPIO	PC6	I/O	–	–	A	LCDHSYNC	O	1	PIO, I, PU, ST
									B	NCS1	O	1	
									C	TWD1	I/O	1	
									D	SPI1_NPCS2	O	1	
									F	ISC_HSYNC	I	3	

© 2018 Microchip Technology Inc.

.....continued

361-ball BGA	289-ball BGA	196-ball BGA	Power Rail	I/O Type	Primary		Alternate		PIO Peripheral				Reset State (Signal, Dir, PU, PD, HiZ, ST)(1)
					Signal	Dir	Signal	Dir	Func	Signal	Dir	IO Set	
N15	M15	F14	VDDIOP1	GPIO_CLK	PC7	I/O	–	–	A	LCDPCK	O	1	PIO, I, PU, ST
									B	NCS2	O	1	
									C	TWCK1	I/O	1	
									D	SPI1_NPCS3	O	1	
									E	URXD1	I	2	
									F	ISC_MCK	O	3	
P11	M13	K13	VDDIOP1	GPIO	PC8	I/O	–	–	A	LCDDEN	O	1	PIO, I, PU, ST
									B	NANDRDY	I	1	
									C	FIQ	I	1	
									D	PCK0	O	3	
									E	UTXD1	O	2	
									F	ISC_FIELD	I	3	
B2	B2	–	VDDISC	GPIO	PC9	I/O	–	–	A	FIQ	I	3	PIO, I, PU, ST
									B	GTSUCOMP	O	1	
									C	ISC_D0	I	1	
									D	TIOA4	I/O	2	
K5	G4	–	VDDISC	GPIO	PC10	I/O	–	–	A	LCDDAT2	O	2	PIO, I, PU, ST
									B	GTXCK	I/O	1	
									C	ISC_D1	I	1	
									D	TIOB4	I/O	2	
									E	CANTX0	O	2	
C2	A2	–	VDDISC	GPIO	PC11	I/O	–	–	A	LCDDAT3	O	2	PIO, I, PU, ST
									B	GTXEN	O	1	
									C	ISC_D2	I	1	
									D	TCLK4	I	2	
									E	CANRX0	I	2	
									F	A0/NBS0	O	2	

.....continued

361-ball BGA	289-ball BGA	196-ball BGA	Power Rail	I/O Type	Primary		Alternate		PIO Peripheral				Reset State (Signal, Dir, PU, PD, HiZ, ST)(1)
					Signal	Dir	Signal	Dir	Func	Signal	Dir	IO Set	
D2	A1	–	VDDISC	GPIO	PC12	I/O	–	–	A	LCDDAT4	O	2	PIO, I, PU, ST
									B	GRXDV	I	1	
									C	ISC_D3	I	1	
									D	URXD3	I	1	
									E	TK0	I/O	2	
									F	A1	O	2	
K2	B1	–	VDDISC	GPIO	PC13	I/O	–	–	A	LCDDAT5	O	2	PIO, I, PU, ST
									B	GRXER	I	1	
									C	ISC_D4	I	1	
									D	UTXD3	O	1	
									E	TF0	I/O	2	
									F	A2	O	2	
K6	G5	–	VDDISC	GPIO	PC14	I/O	–	–	A	LCDDAT6	O	2	PIO, I, PU, ST
									B	GRX0	I	1	
									C	ISC_D5	I	1	
									E	TD0	O	2	
									F	A3	O	2	
B1	G2	–	VDDISC	GPIO	PC15	I/O	–	–	A	LCDDAT7	O	2	PIO, I, PU, ST
									B	GRX1	I	1	
									C	ISC_D6	I	1	
									E	RD0	I	2	
									F	A4	O	2	
K9	G6	–	VDDISC	GPIO	PC16	I/O	–	–	A	LCDDAT10	O	2	PIO, I, PU, ST
									B	GTX0	O	1	
									C	ISC_D7	I	1	
									E	RK0	I/O	2	
									F	A5	O	2	

.....continued

361-ball BGA	289-ball BGA	196-ball BGA	Power Rail	I/O Type	Primary		Alternate		PIO Peripheral				Reset State (Signal, Dir, PU, PD, HiZ, ST)(1)
					Signal	Dir	Signal	Dir	Func	Signal	Dir	IO Set	
C1	C1	–	VDDISC	GPIO	PC17	I/O	–	–	A	LCDDAT11	O	2	PIO, I, PU, ST
									B	GTX1	O	1	
									C	ISC_D8	I	1	
									E	RF0	I/O	2	
									F	A6	O	2	
L9	G9	–	VDDISC	GPIO	PC18	I/O	–	–	A	LCDDAT12	O	2	PIO, I, PU, ST
									B	GMDC	O	1	
									C	ISC_D9	I	1	
									E	FLEXCOM3_IO2	I/O	2	
									F	A7	O	2	
D1	D1	–	VDDISC	GPIO	PC19	I/O	–	–	A	LCDDAT13	O	2	PIO, I, PU, ST
									B	GMDIO	I/O	1	
									C	ISC_D10	I	1	
									E	FLEXCOM3_IO1	I/O	2	
									F	A8	O	2	
L8	H4	–	VDDISC	GPIO	PC20	I/O	–	–	A	LCDDAT14	O	2	PIO, I, PU, ST
									B	GRXCK	I	1	
									C	ISC_D11	I	1	
									E	FLEXCOM3_IO0	I/O	2	
									F	A9	O	2	
E3	E1	–	VDDISC	GPIO	PC21	I/O	–	–	A	LCDDAT15	O	2	PIO, I, PU, ST
									B	GTXER	O	1	
									C	ISC_PCK	I	1	
									E	FLEXCOM3_IO3	O	2	
									F	A10	O	2	
E2	F1	–	VDDISC	GPIO	PC22	I/O	–	–	A	LCDDAT18	O	2	PIO, I, PU, ST
									B	GCRS	I	1	
									C	ISC_VSYNC	I	1	
									E	FLEXCOM3_IO4	O	2	
									F	A11	O	2	

© 2018 Microchip Technology Inc.

.....continued

361-ball BGA	289-ball BGA	196-ball BGA	Power Rail	I/O Type	Primary		Alternate		PIO Peripheral				Reset State (Signal, Dir, PU, PD, HiZ, ST)(1)
					Signal	Dir	Signal	Dir	Func	Signal	Dir	IO Set	
L7	H9	–	VDDISC	GPIO	PC23	I/O	–	–	A	LCDDAT19	O	2	PIO, I, PU, ST
									B	GCOL	I	1	
									C	ISC_HSYNC	I	1	
									F	A12	O	2	
E1	G1	–	VDDISC	GPIO_CLK	PC24	I/O	–	–	A	LCDDAT20	O	2	PIO, I, PU, ST
									B	GRX2	I	1	
									C	ISC_MCK	O	1	
									F	A13	O	2	
L4	H8	–	VDDISC	GPIO	PC25	I/O	–	–	A	LCDDAT21	O	2	PIO, I, PU, ST
									B	GRX3	I	1	
									C	ISC_FIELD	I	1	
									F	A14	O	2	
D6	F7	–	VDDIOP2	GPIO	PC26	I/O	–	–	A	LCDDAT22	O	2	PIO, I, PU, ST
									B	GTX2	O	1	
									D	CANTX1	O	1	
									F	A15	O	2	
E7	B10	–	VDDIOP2	GPIO	PC27	I/O	–	–	A	LCDDAT23	O	2	PIO, I, PU, ST
									B	GTX3	O	1	
									C	PCK1	O	2	
									D	CANRX1	I	1	
									E	TWD0	I/O	2	
									F	A16	O	2	
J5	F6	–	VDDIOP2	GPIO	PC28	I/O	–	–	A	LCDPWM	O	2	PIO, I, PU, ST
									B	FLEXCOM4_IO0	I/O	1	
									C	PCK2	O	1	
									E	TWCK0	I/O	2	
									F	A17	O	2	
C6	B9	–	VDDIOP2	GPIO	PC29	I/O	–	–	A	LCDDISP	O	2	PIO, I, PU, ST
									B	FLEXCOM4_IO1	I/O	1	
									F	A18	O	2	

.....continued

361-ball BGA	289-ball BGA	196-ball BGA	Power Rail	I/O Type	Primary		Alternate		PIO Peripheral				Reset State (Signal, Dir, PU, PD, HiZ, ST)(1)
					Signal	Dir	Signal	Dir	Func	Signal	Dir	IO Set	
D7	E6	–	VDDIOP2	GPIO	PC30	I/O	–	–	A	LCDVSYNC	O	2	PIO, I, PU, ST
									B	FLEXCOM4_IO2	I/O	1	
									F	A19	O	2	
C8	A11	–	VDDIOP2	GPIO	PC31	I/O	–	–	A	LCDHSYNC	O	2	PIO, I, PU, ST
									B	FLEXCOM4_IO3	O	1	
									C	URXD3	I	2	
									F	A20	O	2	
J7	E7	–	VDDIOP2	GPIO_CLK	PD0	I/O	–	–	A	LCDPCK	O	2	PIO, I, PU, ST
									B	FLEXCOM4_IO4	O	1	
									C	UTXD3	O	2	
									D	GTSUCOMP	O	2	
									F	A23	O	2	
D8	C9	–	VDDIOP2	GPIO	PD1	I/O	–	–	A	LCDDEN	O	2	PIO, I, PU, ST
									D	GRXCK	I	2	
									F	A24	O	2	
J6	D8	–	VDDIOP2	GPIO_CLK	PD2	I/O	–	–	A	URXD1	I	1	PIO, I, PU, ST
									D	GTXER	O	2	
									E	ISC_MCK	O	2	
									F	A25	O	2	
M3	J1	–	VDDANA	GPIO_AD	PD3	I/O	PTC_X0	–	A	UTXD1	O	1	PIO, I, PU, ST
									B	FIQ	I	2	
									D	GCRS	I	2	
									E	ISC_D11	I	2	
									F	NWAIT	I	2	
L6	H7	–	VDDANA	GPIO_AD	PD4	I/O	PTC_X1	–	A	TWD1	I/O	2	PIO, I, PU, ST
									B	URXD2	I	1	
									D	GCOL	I	2	
									E	ISC_D10	I	2	
									F	NCS0	O	2	

.....continued

361-ball BGA	289-ball BGA	196-ball BGA	Power Rail	I/O Type	Primary		Alternate		PIO Peripheral				Reset State (Signal, Dir, PU, PD, HiZ, ST)(1)
					Signal	Dir	Signal	Dir	Func	Signal	Dir	IO Set	
L2	H1	–	VDDANA	GPIO_AD	PD5	I/O	PTC_X2	–	A	TWCK1	I/O	2	PIO, I, PU, ST
									B	UTXD2	O	1	
									D	GRX2	I	2	
									E	ISC_D9	I	2	
									F	NCS1	O	2	
J1	J2	–	VDDANA	GPIO_AD	PD6	I/O	PTC_X3	–	A	TCK	I	2	PIO, I, PU, ST
									B	PCK1	O	1	
									D	GRX3	I	2	
									E	ISC_D8	I	2	
									F	NCS2	O	2	
L5	H6	H5	VDDANA	GPIO_AD	PD7	I/O	PTC_X4	–	A	TDI	I	2	PIO, I, PU, ST
									C	UTMI_RXVAL	O	1	
									D	GTX2	O	2	
									E	ISC_D0	I	2	
									F	NWR1/NBS1	O	2	
K1	K3	J2	VDDANA	GPIO_AD	PD8	I/O	PTC_X5	–	A	TDO	O	2	PIO, I, PU, ST
									C	UTMI_RXERR	O	1	
									D	GTX3	O	2	
									E	ISC_D1	I	2	
									F	NANDRDY	I	2	
L3	J4	G4	VDDANA	GPIO_AD	PD9	I/O	PTC_X6	–	A	TMS	I	2	PIO, I, PU, ST
									C	UTMI_RXACT	O	1	
									D	GTXCK	I/O	2	
									E	ISC_D2	I	2	
L1	J3	C2	VDDANA	GPIO_AD	PD10	I/O	PTC_X7	–	A	NTRST	I	2	PIO, I, PU, ST
									C	UTMI_HDIS	O	1	
									D	GTXEN	O	2	
									E	ISC_D3	I	2	

.....continued

361-ball BGA	289-ball BGA	196-ball BGA	Power Rail	I/O Type	Primary		Alternate		PIO Peripheral				Reset State (Signal, Dir, PU, PD, HiZ, ST)(1)
					Signal	Dir	Signal	Dir	Func	Signal	Dir	IO Set	
N3	K2	F2	VDDANA	GPIO_AD	PD11	I/O	PTC_Y0	–	A	TIOA1	I/O	3	PIO, I, PU, ST
									B	PCK2	O	2	
									C	UTMI_LS0	O	1	
									D	GRXDV	I	2	
									E	ISC_D4	I	2	
									F	ISC_MCK	O	4	
M7	K9	K4	VDDANA	GPIO_AD	PD12	I/O	PTC_Y1	–	A	TIOB1	I/O	3	PIO, I, PU, ST
									B	FLEXCOM4_IO0	I/O	2	
									C	UTMI_LS1	O	1	
									D	GRXER	I	2	
									E	ISC_D5	I	2	
									F	ISC_D4	I	4	
N2	N1	C1	VDDANA	GPIO_AD	PD13	I/O	PTC_Y2	–	A	TCLK1	I	3	PIO, I, PU, ST
									B	FLEXCOM4_IO1	I/O	2	
									C	UTMI_CDRCPSEL0	I	1	
									D	GRX0	I	2	
									E	ISC_D6	I	2	
									F	ISC_D5	I	4	
M6	K5	H2	VDDANA	GPIO_AD	PD14	I/O	PTC_Y3	–	A	TCK	I	1	A, PU, ST
									B	FLEXCOM4_IO2	I/O	2	
									C	UTMI_CDRCPSEL1	I	1	
									D	GRX1	I	2	
									E	ISC_D7	I	2	
									F	ISC_D6	I	4	
M5	K8	G2	VDDANA	GPIO_AD	PD15	I/O	PTC_Y4	–	A	TDI	I	1	PIO, I, PU, ST
									B	FLEXCOM4_IO3	O	2	
									C	UTMI_CDRCPDIVEN	I	1	
									D	GTX0	O	2	
									E	ISC_PCK	I	2	
									F	ISC_D7	I	4	

© 2018 Microchip Technology Inc.

.....continued

361-ball BGA	289-ball BGA	196-ball BGA	Power Rail	I/O Type	Primary		Alternate		PIO Peripheral				Reset State (Signal, Dir, PU, PD, HiZ, ST)(1)
					Signal	Dir	Signal	Dir	Func	Signal	Dir	IO Set	
M1	L1	J1	VDDANA	GPIO_AD	PD16	I/O	PTC_Y5	–	A	TDO	O	1	PIO, I, PU, ST
									B	FLEXCOM4_IO4	O	2	
									C	UTMI_CDRBISTEN	I	1	
									D	GTX1	O	2	
									E	ISC_VSYNC	I	2	
									F	ISC_D8	I	4	
M2	K1	A1	VDDANA	GPIO_AD	PD17	I/O	PTC_Y6	–	A	TMS	I	1	A, PU, ST
									C	UTMI_CDRCPSELDIV	O	1	
									D	GMDC	O	2	
									E	ISC_HSYNC	I	2	
									F	ISC_D9	I	4	
M4	J7	G3	VDDANA	GPIO_AD	PD18	I/O	PTC_Y7	–	A	NTRST	I	1	PIO, I, PU, ST
									D	GMDIO	I/O	2	
									E	ISC_FIELD	I	2	
									F	ISC_D10	I	4	
M8	L8	K2	VDDANA	GPIO_AD	PD19	I/O	AD0	–	A	PCK0	O	1	PIO, I, PU, ST
									B	TWD1	I/O	3	
									C	URXD2	I	3	
									E	I2SC0_CK	I/O	2	
									F	ISC_D11	I	4	
N1	L2	H1	VDDANA	GPIO_AD	PD20	I/O	AD1	–	A	TIOA2	I/O	3	PIO, I, PU, ST
									B	TWCK1	I/O	3	
									C	UTXD2	O	3	
									E	I2SC0_MCK	O	2	
									F	ISC_PCK	I	4	
P3	P1	G1	VDDANA	GPIO_AD	PD21	I/O	AD2	–	A	TIOB2	I/O	3	PIO, I, PU, ST
									B	TWD0	I/O	4	
									C	FLEXCOM4_IO0	I/O	3	
									E	I2SC0_WS	I/O	2	
									F	ISC_VSYNC	I	4	

.....continued

361-ball BGA	289-ball BGA	196-ball BGA	Power Rail	I/O Type	Primary		Alternate		PIO Peripheral				Reset State (Signal, Dir, PU, PD, HiZ, ST)(1)
					Signal	Dir	Signal	Dir	Func	Signal	Dir	IO Set	
N6	L6	F1	VDDANA	GPIO_AD	PD22	I/O	AD3	–	A	TCLK2	I	3	PIO, I, PU, ST
									B	TWCK0	I/O	4	
									C	FLEXCOM4_IO1	I/O	3	
									E	I2SC0_DI0	I	2	
									F	ISC_HSYNC	I	4	
P1	T1	E1	VDDANA	GPIO_AD	PD23	I/O	AD4	–	A	URXD2	I	2	PIO, I, PU, ST
									C	FLEXCOM4_IO2	I/O	3	
									E	I2SC0_DO0	O	2	
									F	ISC_FIELD	I	4	
N8	L4	–	VDDANA	GPIO_AD	PD24	I/O	AD5	–	A	UTXD2	O	2	PIO, I, PU, ST
									C	FLEXCOM4_IO3	O	3	
P8	L5	–	VDDANA	GPIO_AD	PD25	I/O	AD6	–	A	SPI1_SPCK	I/O	3	PIO, I, PU, ST
									C	FLEXCOM4_IO4	O	3	
P2	R1	–	VDDANA	GPIO_AD	PD26	I/O	AD7	–	A	SPI1_MOSI	I/O	3	PIO, I, PU, ST
									C	FLEXCOM2_IO0	I/O	2	
N5	L7	–	VDDANA	GPIO_AD	PD27	I/O	AD8	–	A	SPI1_MISO	I/O	3	PIO, I, PU, ST
									B	TCK	I	3	
									C	FLEXCOM2_IO1	I/O	2	
N4	L3	–	VDDANA	GPIO_AD	PD28	I/O	AD9	–	A	SPI1_NPCS0	I/O	3	PIO, I, PU, ST
									B	TDI	I	3	
									C	FLEXCOM2_IO2	I/O	2	
R2	M2	–	VDDANA	GPIO_AD	PD29	I/O	AD10	–	A	SPI1_NPCS1	O	3	PIO, I, PU, ST
									B	TDO	O	3	
									C	FLEXCOM2_IO3	O	2	
									D	TIOA3	I/O	3	
									E	TWD0	I/O	3	
N10	M9	–	VDDANA	GPIO_AD	PD30	I/O	AD11	–	A	SPI1_NPCS2	O	3	PIO, I, PU, ST
									B	TMS	I	3	
									C	FLEXCOM2_IO4	O	2	
									D	TIOB3	I/O	3	
									E	TWCK0	I/O	3	

© 2018 Microchip Technology Inc.

.....continued

361-ball BGA	289-ball BGA	196-ball BGA	Power Rail	I/O Type	Primary		Alternate		PIO Peripheral				Reset State (Signal, Dir, PU, PD, HiZ, ST)(1)
					Signal	Dir	Signal	Dir	Func	Signal	Dir	IO Set	
P7	M8	–	VDDANA	GPIO	PD31	I/O	–	–	A	ADTRG	I	1	PIO, I, PU, ST
									B	NTRST	I	3	
									C	IRQ	I	4	
									D	TCLK3	I	3	
									E	PCK0	O	2	
M9	L9	L1	VDDANA	–	ADVREF	I	–	–	–	–	–	–	–
G1, H6	K4, J5	K3, L2	VDDANA	power	VDDANA	I	–	–	–	–	–	–	–
F1, G5	J6, M1	L3, K1	GNDANA	ground	GNDANA	I	–	–	–	–	–	–	–
M12, J10	J10, F11	K12, F12	VDDIODDR	DDR	DDR_VREF	I	–	–	–	–	–	–	–
C19	-	-	VDDIODDR	DDR	ZQ	-	-	-	-	-	-	-	-
E11, E8, H10, J13, J8, L10, P12	L10, L14, J8, H10, G12, E11, E8	F10, E8, E9, E10, G12, H12, J12	VDDIODDR	power	VDDIODDR	I	–	–	–	–	–	–	–
E10, F8, G10, J9, L11, M13, N12	K10, M14, J9, G10, H12, E10, F8	K11, J11, F9, C10, E11, F8, F11, G13, H13	GNDIODDR	ground	GNDIODDR	I	–	–	–	–	–	–	–
C3, C9, K3, U9, V5, W6, K8	H2, U3, P7, L12, E9, D7	G7, H4, D14, E14, L5	VDDCORE	power	VDDCORE	I	–	–	–	–	–	–	–
A1, D9, J11, K4, K7, V9, W1	E12, F12, J11, K11, K6, K7	G11, E12, E13, H3, H7, H8, J3	GNDCORE	ground	GNDCORE	I	–	–	–	–	–	–	–
B4, D5	D4, F3	F4, E4	VDDIOP0	power	VDDIOP0	I	–	–	–	–	–	–	–
A5, D4	E3, F2	E5, F5	GNDIOP0	ground	GNDIOP0	I	–	–	–	–	–	–	–
V13, V18	N12, P12	N9, N10	VDDIOP1	power	VDDIOP1	I	–	–	–	–	–	–	–
P13, R13, W13, W19	M12, P11	M9, M10	GNDIOP1	ground	GNDIOP1	I	–	–	–	–	–	–	–
A8	D9	–	VDDIOP2	power	VDDIOP2	I	–	–	–	–	–	–	–
B9	D6	–	GNDIOP2	ground	GNDIOP2	I	–	–	–	–	–	–	–
T7	N8	J7	VDDSDMMC	power	VDDSDMMC	I	–	–	–	–	–	–	–

.....continued

361-ball BGA	289-ball BGA	196-ball BGA	Power Rail	I/O Type	Primary		Alternate		PIO Peripheral				Reset State (Signal, Dir, PU, PD, HiZ, ST)(1)
					Signal	Dir	Signal	Dir	Func	Signal	Dir	IO Set	
T8	R8	J8	GNDSDMMC	ground	GNDSDMMC	I	–	–	–	–	–	–	–
G3	H3	–	VDDISC	power	VDDISC	I	–	–	–	–	–	–	–
H3	H5	–	GNDISC	ground	GNDISC	I	–	–	–	–	–	–	–
U15	N13	M13	VDDFUSE	power	VDDFUSE	I	–	–	–	–	–	–	–
P9	R5	P4	VDDPLLA	power	VDDPLLA	I	–	–	–	–	–	–	–
P10	T5	L6	GNDPLLA	ground	GNDPLLA	I	–	–	–	–	–	–	–
R6	M4	K6	VDDAUDIOPLL	power	VDDAUDIOPLL	I	–	–	–	–	–	–	–
N9	T3	J6	GNDDPLL	ground	GNDDPLL	I	–	–	–	–	–	–	–
P6	T4	H6	GNDAUDIOPLL	ground	GNDAUDIOPLL	I	–	–	–	–	–	–	–
W2	T8	P1	VDDAUDIOPLL	–	CLK_AUDIO	O	–	–	–	–	–	–	–
W5	U9	N5	VDDOSC	–	XIN	I	–	–	–	–	–	–	–
W4	U8	P5	VDDOSC	–	XOUT	O	–	–	–	–	–	–	–
R10	N6	M7	VDDOSC	–	VDDOSC	I	–	–	–	–	–	–	–
T11	P5	N6	GNDOSC	ground	GNDOSC	I	–	–	–	–	–	–	–
R8	P6	M6	VDDUTMII	power	VDDUTMII	I	–	–	–	–	–	–	–
U7	R7	–	VDDHSIC	power	VDDHSIC	I	–	–	–	–	–	–	–
R7	M6	L7	GNDUTMII	ground	GNDUTMII	I	–	–	–	–	–	–	–
W7	U10	N7	VDDUTMII	–	HHSDPA	I/O	–	–	–	–	–	–	–
V7	T10	P7	VDDUTMII	–	HHSDMA	I/O	–	–	–	–	–	–	–
W8	U11	N8	VDDUTMII	–	HHSDPB	I/O	–	–	–	–	–	–	–
V8	T11	P8	VDDUTMII	–	HHSDMB	I/O	–	–	–	–	–	–	–
W9	T12	–	VDDHSIC	–	HHSDPDATC	I/O	–	–	–	–	–	–	–
W10	U12	–	VDDHSIC	–	HHSDMSTRC	I/O	–	–	–	–	–	–	–
T6	M7	K7	VDDUTMIC	power	VDDUTMIC	I	–	–	–	–	–	–	–
U6	R6	G5	GNDUTMIC	ground	GNDUTMIC	I	–	–	–	–	–	–	–
V6	T6	P6	VDDUTMIC	–	VBG	I	–	–	–	–	–	–	–
T2	R4	D1	VDDBU	–	TST	I	–	–	–	–	–	–	–
W3	T7	J5	VDDBU	–	NRST	I	–	–	–	–	–	–	–
T3	R3	N3	VDDBU	–	JTAGSEL	I	–	–	–	–	–	–	–
U2	R2	N1	VDDBU	–	WKUP	I	–	–	–	–	–	–	–
R1	N2	–	VDDBU	–	RXD	I	–	–	–	–	–	–	–

.....continued

361-ball BGA	289-ball BGA	196-ball BGA	Power Rail	I/O Type	Primary		Alternate		PIO Peripheral				Reset State (Signal, Dir, PU, PD, HiZ, ST)[1]
					Signal	Dir	Signal	Dir	Func	Signal	Dir	IO Set	
P4	T2	B1	VDDBU	–	SHDN	O	–	–	–	–	–	–	–
R4	P3	N4	VDDBU	–	PIOBU0	I/O	–	–	–	–	–	–	–
R5	M3	L4	VDDBU	–	PIOBU1	I/O	–	–	–	–	–	–	–
R3	P2	M3	VDDBU	–	PIOBU2	I/O	–	–	–	–	–	–	–
T4	P4	M4	VDDBU	–	PIOBU3	I/O	–	–	–	–	–	–	–
U3	N4	J4	VDDBU	–	PIOBU4	I/O	–	–	–	–	–	–	–
T5	M5	M5	VDDBU	–	PIOBU5	I/O	–	–	–	–	–	–	–
U5	N5	–	VDDBU	–	PIOBU6	I/O	–	–	–	–	–	–	–
P5	N3	–	VDDBU	–	PIOBU7	I/O	–	–	–	–	–	–	–
V3	U5	K5	VDDBU	power	VDDBU	I	–	–	–	–	–	–	–
U4	U4	N2	GNDBU	ground	GNDBU	I	–	–	–	–	–	–	–
U1	U2	M1	VDDBU	–	XIN32	I	–	–	–	–	–	–	–
T1	U1	M2	VDDBU	–	XOUT32	O	–	–	–	–	–	–	–
V1	U6	P2	VDDBU	–	COMPP	I	–	–	–	–	–	–	–
V2	U7	P3	VDDBU	–	COMPN	I	–	–	–	–	–	–	–
-	D17	D12	DDRM_VDDQ[2]	–	ODT	I	–	–	–	–	–	–	–
-	A16, B16, C16, D16, E15, G17, J17, L16	B10, A12, D10, D11	DDRM_VDD	power	DDRM_VDD	I	–	–	–	–	–	–	–
-	E16	E7	DDRM_VDDL[2]	power	DDRM_VDDL[2]	I	–	–	–	–	–	–	–
-	F15, G15, H15, J15, K15, L15	A7, A13, A9, A11, B6, C12	DDRM_VDDQ[2]	power	DDRM_VDDQ[2]	–	–	–	–	–	–	–	–

.....continued

361-ball BGA	289-ball BGA	196-ball BGA	Power Rail	I/O Type	Primary		Alternate		PIO Peripheral				Reset State (Signal, Dir, PU, PD, HiZ, ST)(1)
					Signal	Dir	Signal	Dir	Func	Signal	Dir	IO Set	
A14, A19, B14, B18, C14, C18, D14, D18, E14, E18, F14, F18, G14, G18, H14, H18, N14, N17, N18, P14, P18, R14, R18, T18	A17, B17, C17, D15, E14, F17, H17, L17	B14, A8, C11, C14, D8	DDRM_VSS	ground	DDRM_VSS	–	–	–	–	–	–	–	–
-	E17	D13	DDRM_VSSDL	ground	DDRM_VSSDL	I	–	–	–	–	–	–	–
-	F16, G16, H16, J16, K16, K17	A10, A14, B11, B12, B13, C13	DDRM_VSSQ	ground	DDRM_VSSQ	I	–	–	–	–	–	–	–
B15, B17, B19, D15, D17, D19, F15, F17, F19, H15, H17, H19, K15, K17, K19, M15, M17, M19, P15, P17, P19, T17, T19	-	-	DDRM_VDD12(3)	power	DDRM_VDD12(3)	I	-	-	-	-	-	-	-
B11, B13, D11, D13, K13, K16	-	-	DDRM_VDD18(3)	power	DDRM_VDD18(3)	I	-	-	-	-	-	-	-

.....continued

361-ball BGA	289-ball BGA	196-ball BGA	Power Rail	I/O Type	Primary		Alternate		PIO Peripheral				Reset State (Signal, Dir, PU, PD, HiZ, ST)[1]
					Signal	Dir	Signal	Dir	Func	Signal	Dir	IO Set	
A13, A15, A16, A17, A18, B10, B12, B16, C10, C11, C12, C13, C15, C16, C17, D10, D12, D16, E12, E13, E15, E16, E17, E19, E5, E6, E9, F10, F11, F12, F13, F16, F5, F6, F7, F9, G11, G12, G13, G15, G16, G17, G19, G7, G8, G9, H11, H12, H13, H16, H7, H8, H9, J12, J14, J15, J16, J17, J18, J19, K10, K11, K12, K14, L12, L13, L14, L15, L16, M10, M11, M14, N11, N13, N16, N7, R11, R12, R17, T12, T9, U10, U11, U8, V4	A12, A13, A14, A15, B11, B12, B13, B14, B15, C10, C11, C12, C13, C14, C15, D10, D11, D12, D13, D14, E13, F9, F10, F13, F14, G11, G13, G14, H11, H13, H14, J12, J13, J14, K12, K13, K14, L13, R12, T9	–	–	NC[4]	–	–	–	–	–	–	–	–	–

Note:

1. Signal = 'PIO' if GPIO; Dir = Direction; PU = Pull-up; PD = Pull-down; HiZ = High impedance; ST = Schmitt Trigger
2. Refer to the DDR2-SDRAM data sheet for DDRM_VDDQ and DDRM_VDDL definitions. DDRM_VDDQ/DDRM_VDDL = 1.8V ±0.1V.
3. DDRM_VDD18 stands for VDD1, DDRM_VDD12 stands for VDD2, refer to the LPDDR2-SDRAM data sheet for VDD1 and VDD2 definitions.
4. These balls are not internally connected, they can be left unconnected, connected to any GND, VDD or to any slowly varying signal to avoid any EMI related issues.

7. Memory

The SAMA5D2 SIP is available with 128 Mbits, 512 Mbits or 1 Gbit of DDR2-SDRAM memory, and with 1 Gbit or 2 Gbits of LPDDR2-SDRAM memory. For the features of these memories, see DDR2-SDRAM Features and LPDDR2-SDRAM Features.

For power consumption, electrical characteristics and timings of these memories, refer to the data sheets referenced below on the manufacturer's website.

Table 7-1. Memory Data Sheet References

Memory Type	Density	Manufacturer Packaged PN	Data Sheet Reference Number
DDR2-SDRAM	128 Mbit	Winbond W9712G6KB25I	W9712G6KB
	512 Mbit	Winbond W9751G6KB25I	W9751G6KB
	1 Gbit	Winbond W971GG6SB25I	W971GG6SB
LPDDR2-SDRAM	1 Gbit	apmemory AD2100xxx-	lpddr2_datasheet_1gb
	2 Gbit	apmemory AD2200xxx-	lpddr2_datasheet_2gb

8. Electrical Characteristics

8.1 Decoupling

100 nF (min) decoupling capacitors must be added on each power supply pin, as close as possible to the device.

8.2 Power Sequences

8.2.1 SAMA5D2 DDR2 SIP

DDRM_VDD, DDRM_VDDL and DDRM_VDDQ power rails must be connected to VDDIODDR (1.8V) on the PCB. Refer to the sections “Power-up Considerations” and “Power-down Considerations” in the *SAMA5D2 Series* data sheet, ref. no. DS60001476, available on www.microchip.com.

8.2.2 SAMA5D2 LPDDR2 SIP

The DDRM_VDD12 power rail must be connected to VDDIODDR (1.2V). The DDRM_VDD18 power rail must be connected to a 1.8V power supply. For Backup with Self-refresh mode, these power supplies must be maintained.

Important: The sections below supersede “Recommended Power-up Sequence”, “Recommended Power-up Sequence”, “Power Supply Sequencing at Backup Mode Entry and Exit” in the *SAMA5D2 Series* data sheet.

8.2.2.1 Power-up Considerations

At power-up, from a supply sequencing perspective, the SAMA5D2 LPDDR2 SIP power supply inputs are categorized into two groups:

- Group 1 (core group) contains VDDCORE, VDDUTMIC, VDDHSIC and VDDPLLA.
- Group 2 (periphery group) contains all other power supply inputs except VDDFUSE.
  The figure below shows the recommended power-up sequence. Note that:
  - VDDBU, when supplied from a battery, is an always-on supply input and is therefore not part of the power supply sequencing. When no backup battery is present in the application, VDDBU is part of Group 2.
  - VDDFUSE is the only power supply that may be left unpowered during operation. This is possible if and only if the application does not access the Customer Fuse Matrix in Write mode. It is good practice to turn on VDDFUSE only when the Customer Fuse Matrix is accessed in Write mode, and to turn off VDDFUSE otherwise.

Figure 8-1. Recommended Power-up Sequence

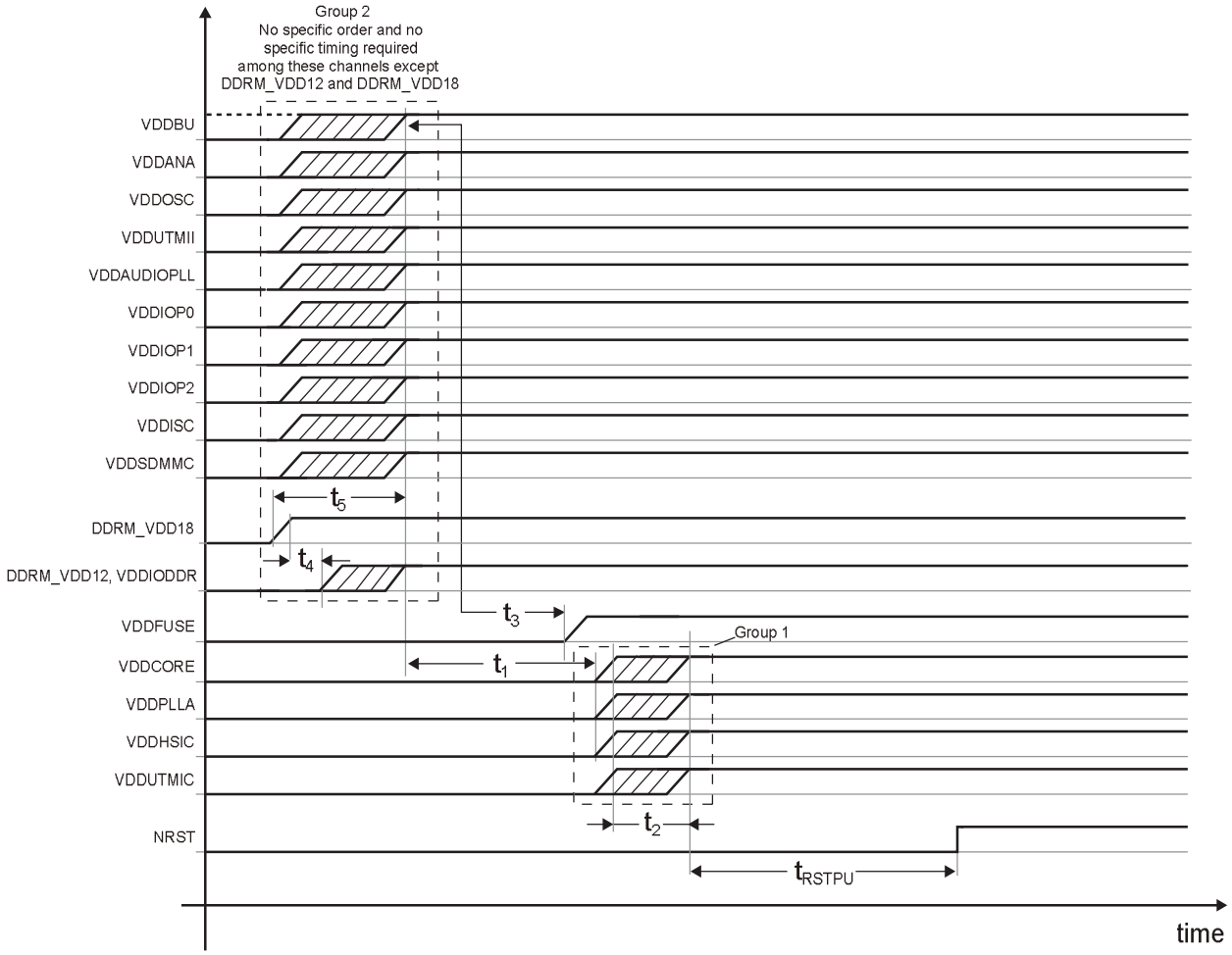

Table 8-1. Power-up Timing Specification

Symbol	Parameter	Conditions	Min	Max	Unit
t_1	Group 2 to Group 1 delay	Delay from the last Group 2 established[(1)] supply to the first Group 1 supply turn-on	0	–	ms
t_2	Group 1 delay	Delay from the first Group 1 established supply to the last Group 1 established supply	–	1	
t_3	VDDFUSE to VDDBU delay	Delay from VDDBU established to VDDFUSE turn-on	1	–	
t_4	DDRM_VDD18 to DDRM_VDD12 delay	Delay from the DDRM_VDD18 established to DDRM_VDD12 turn-on	0	–	
t_5	LPDDR2 power-on delay	Delay from DDRM_VDD18 turn-on to DDRM_VDD12 established	–	20	
t_{RSTPU}	Reset delay at power-up	From the last established supply to NRST high	1	–	

Note:

1. An “established” supply refers to a power supply established at 90% of its final value.

8.2.2.2 Power-down Considerations

The figure below shows the SAMA5D2 LPDDR2 SIP power-down sequence that starts by asserting the NRST line to 0. Once NRST is asserted, the supply inputs can be immediately shut down without any specific timing or order except for DDRM_VDD12 and DDRM_VDD18. VDDBU may not be shut down if the application uses a backup battery on this supply input. In applications where VDDFUSE is powered, it is mandatory to shut down VDDFUSE prior to removing any other supply. VDDFUSE can be removed before or after asserting the NRST signal.

Figure 8-2. Recommended Power-down Sequence

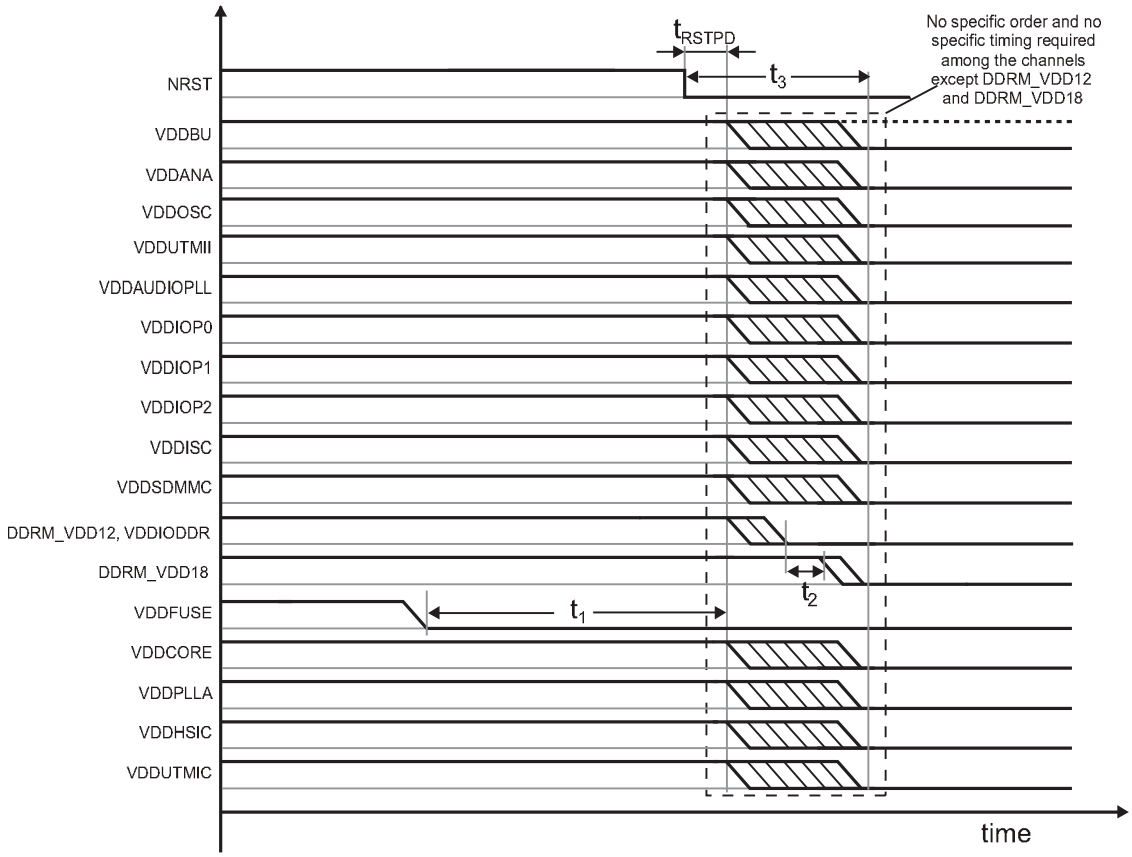

Table 8-2. Power-down Timing Specification

Symbol	Parameter	Conditions	Min	Max	Unit
t_{RSTPD}	Reset delay at power-down	From NRST low to the first supply turn-off	0	–	ms
t_1	VDDFUSE delay at shut-down	From VDDFUSE < 1V to the first supply turn-off	0	–	
t_2	DDRM_VDD12 to DDRM_VDD18 delay	From DDRM_VDD12 zeroed to DDRM_VDD18 turn-off	0	–	
t_3	LPDDR2 power-off delay	From NRST low to DDRM_VDD18 zeroed	–	2000	

8.2.2.3 Backup Mode Entry (Shutdown)

The figure below shows the recommended power-down sequence to place the SAMA5D2 LPDDR2 SIP either in Backup mode or in Backup mode with the LPDDR2 in self-refresh. The SHDN signal, an output of the Shutdown Controller (SHDWC), signals the shutdown request to the power supply. This output is

supplied by VDDBU that is present in Backup mode. Placing the LPDDR2 memory in self-refresh while in Backup mode requires maintaining VDDIODDR, DDRM_VDD18 and DDRM_VDD12 as well. One possible way to signal this additional need to the power supply is to position one of the general-purpose I/Os supplied by VDDBU (PIOBUx) in a predefined state.

Figure 8-3. Recommended Backup Mode Entry (Shutdown)

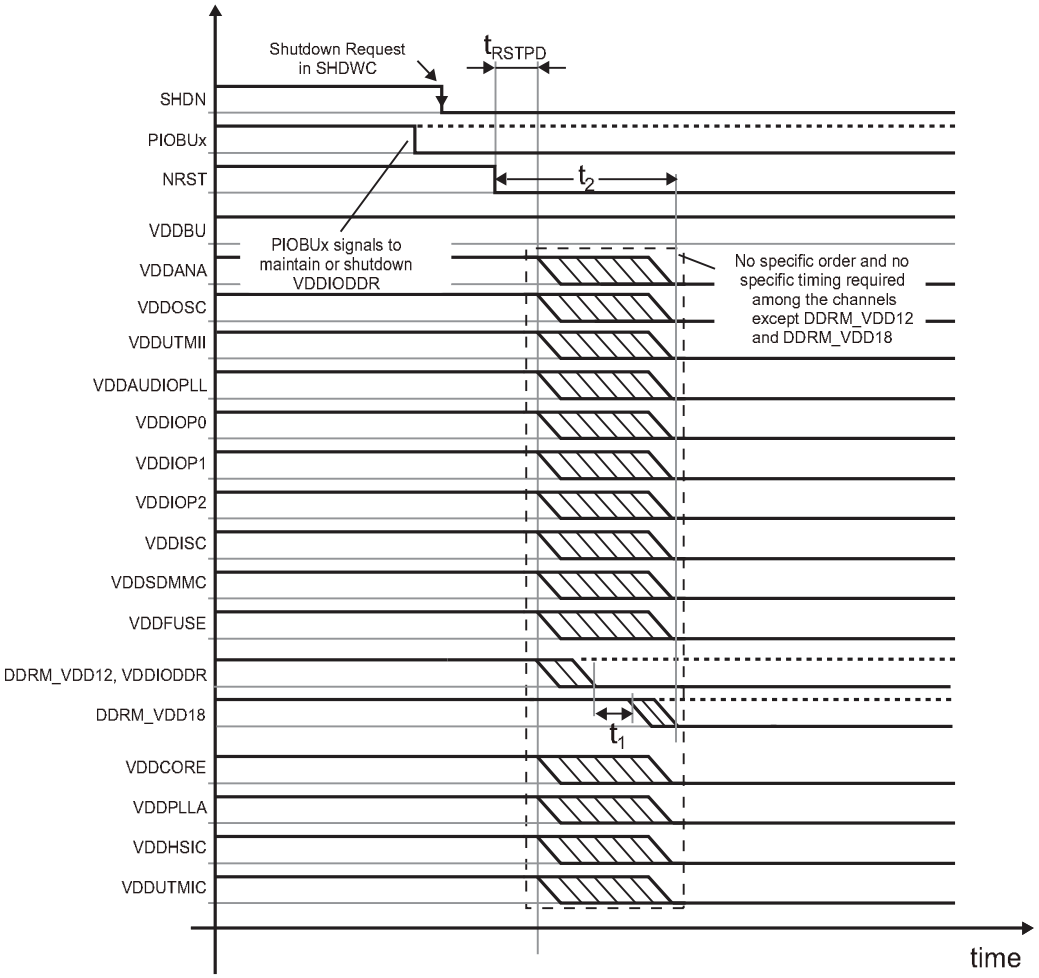

Table 8-3. Shutdown Timing Specification

Symbol	Parameter	Conditions	Min	Max	Unit
t_{RSTPD}	Reset delay at power-down	From NRST low to the first supply turn-off	0	–	ms
t_1	DDRM_VDD12 to DDRM_VDD18 delay	From DDRM_VDD12 zeroed to DDRM_VDD18 turn-off	0	–	
t_2	LPDDR2 power-off delay	From NRST low to DDRM_VDD18 zeroed	–	2000	

8.2.2.4 Backup Mode Exit (Wake-up)

The figure below shows the recommended power-up sequence to wake up the SAMA5D2 LPDDR2 SIP from Backup mode. Upon a wake-up event, the Shutdown Controller toggles its SHDN output back to VDDBU to request the power supply to restart. Except for VDDIODDR, DDRM_VDD18 and DDRM_VDD12 which may already be present if the LPDDR2 memory was placed in Self-refresh mode,

this power-up sequence is the same one as presented in the figure “Recommended Power-up Sequence”. In particular, the definitions of Group 1 and Group 2 are the same.

Figure 8-4. Recommended Backup Mode Exit (Wake-Up)

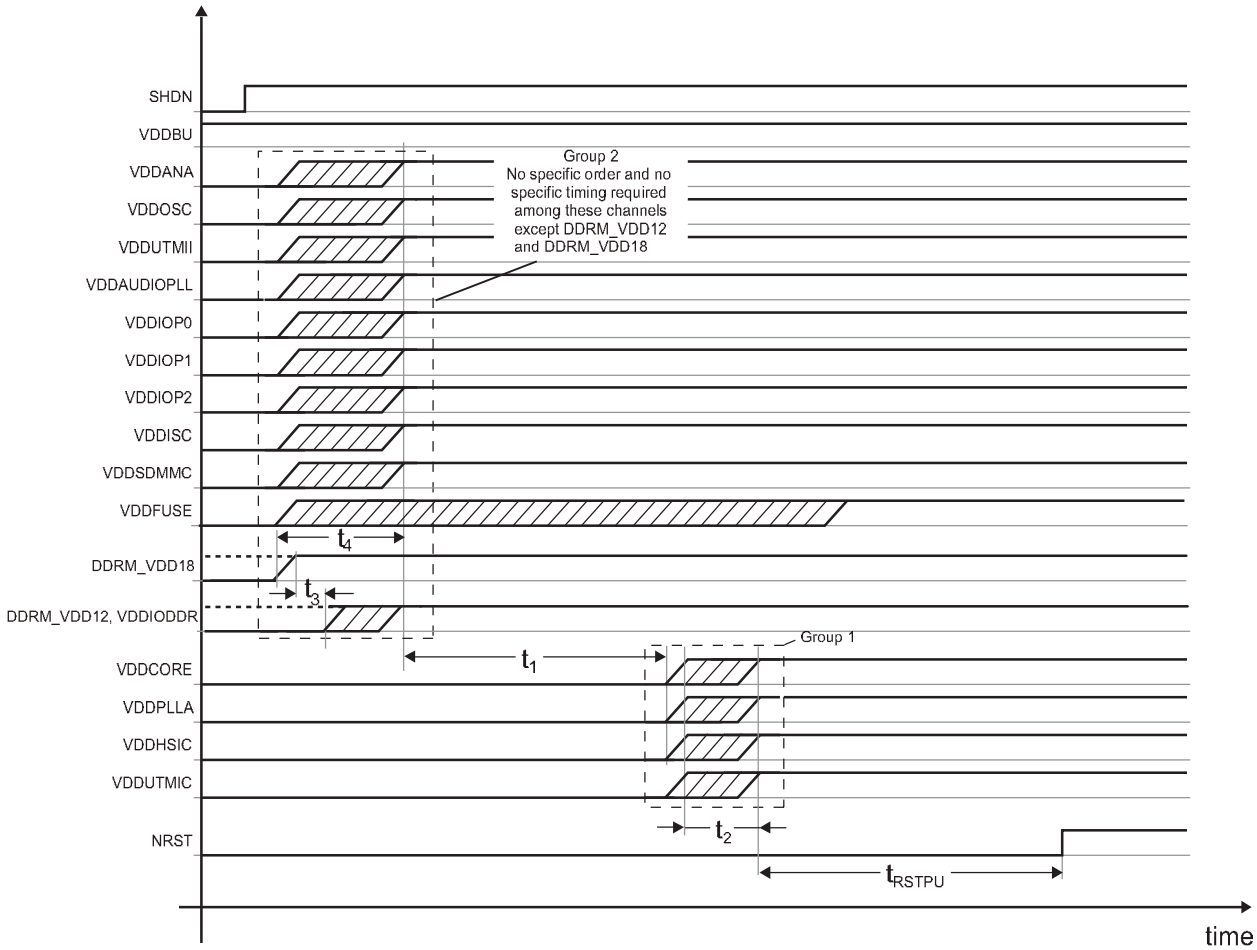

Table 8-4. Wake-up Timing Specification

Symbol	Parameter	Conditions	Min	Max	Unit
t_1	Group 2 to Group 1 delay	Delay from the last Group 2 established[(1)] supply to the first Group 1 supply turn-on	1	–	ms
t_2	Group 1 delay	Delay from the first Group 1 established supply to the last Group 1 established supply	–	1	
t_3	DDRM_VDD18 to DDRM_VDD12 delay	Delay from the DDRM_VDD18 established to DDRM_VDD12 turn-on	0	–	
t_4	LPDDR2 power-on delay	Delay from DDRM_VDD18 turn-on to DDRM_VDD12 established	–	20	
t_{RSTPU}	Reset delay at power-up	From the last established supply to NRST high	1	–	

Note:

1. An “established” supply refers to a power supply established at 90% of its final value.

9. Mechanical Characteristics

9.1 361-ball TFBGA

361-Ball Thin Fine Pitch Ball Grid Array (DYB) - 16x16 mm Body [TFBGA]
Atmel Legacy Global Package Code CEP

Note:	For the most current package drawings, please see the Microchip Packaging Specification located at http://www.microchip.com/packaging

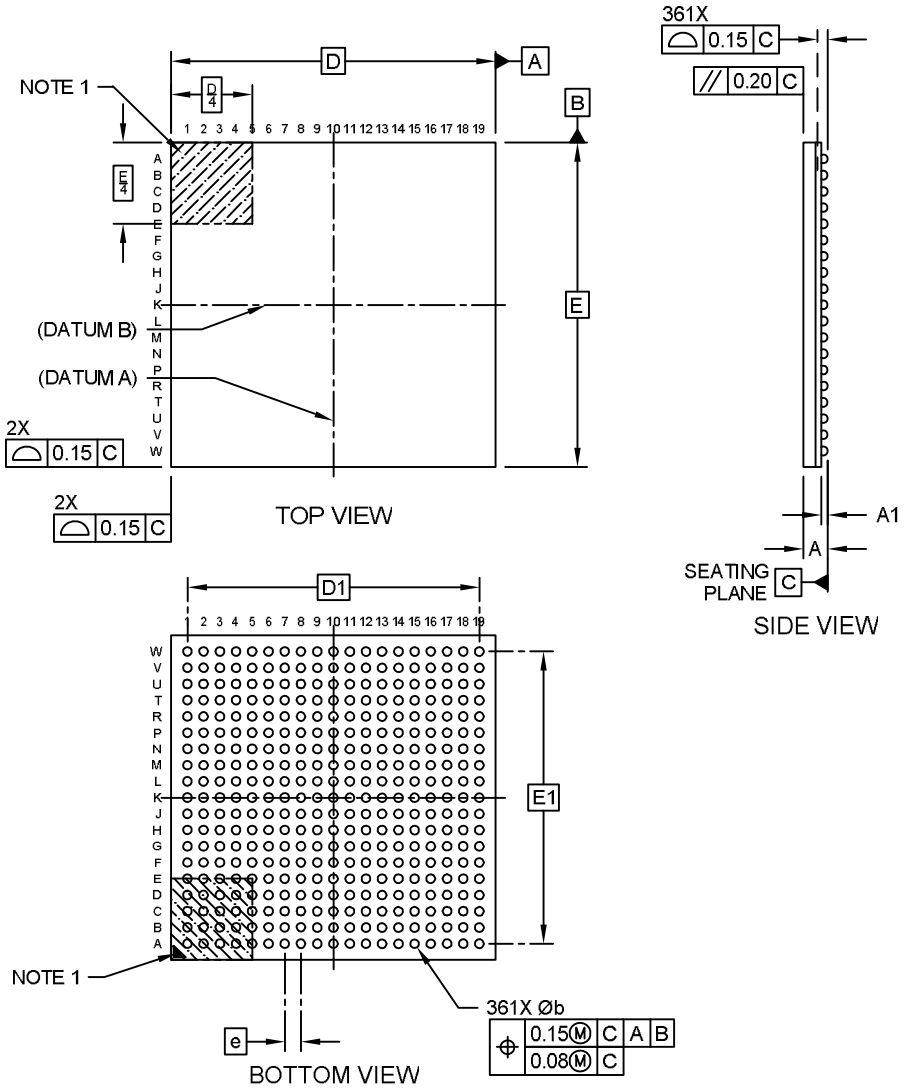

Microchip Technology Drawing C04-21149-DYB Rev A Sheet 1 of 2

361-Ball Thin Fine Pitch Ball Grid Array (DYB) - 16x16 mm Body [TFBGA] Atmel Legacy Global Package Code CEP

Note: For the most current package drawings, please see the Microchip Packaging Specification located at http://www.microchip.com/packaging

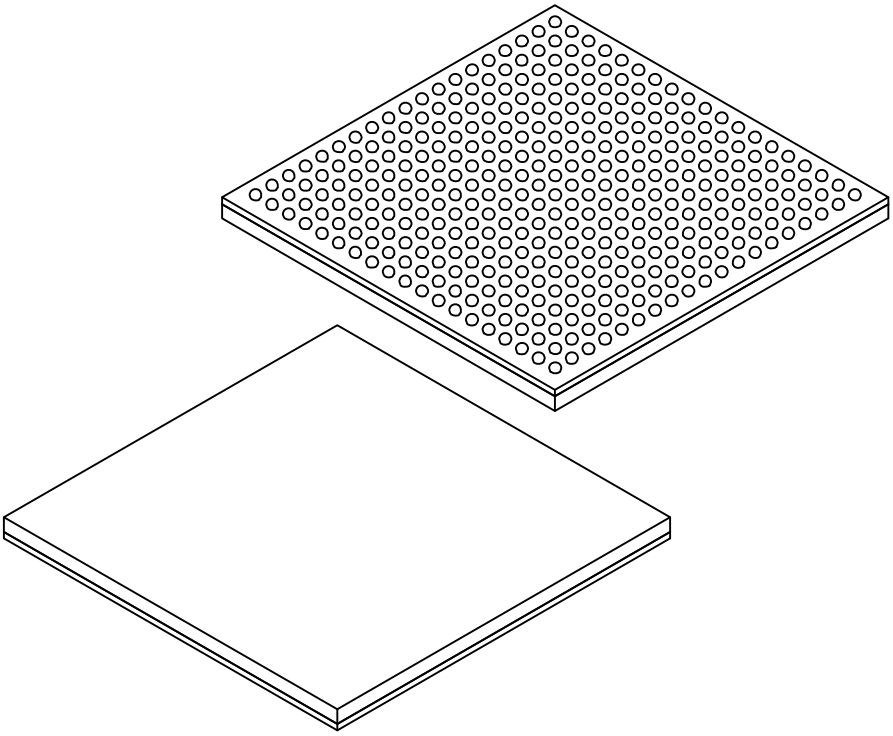

Units		MILLIMETERS		
Dimension Limits		MIN	NOM	MAX
Number of Terminals	N	361		
Pitch	e	0.80 BSC		
Overall Height	A	-	-	1.20
Standoff	A1	0.27	-	0.37
Overall Length	D	16.00 BSC		
Overall Pitch	D1	14.40 BSC		
Overall Width	E	16.00 BSC		
Overall Pitch	E1	14.40 BSC		
Terminal Width	b	0.38	-	0.48

Notes:

1. Pin 1 visual index feature may vary, but must be located within the hatched area.
2. Dimensioning and tolerancing per ASME Y14.5M
   BSC: Basic Dimension. Theoretically exact value shown without tolerances.
   REF: Reference Dimension, usually without tolerance, for information purposes only.

Microchip Technology Drawing C04-21149-DYB Rev A Sheet 2 of 2

361-Ball Thin Fine Pitch Ball Grid Array (DYB) - 16x16 mm Body [TFBGA] Atmel Legacy Global Package Code CEP

Note: For the most current package drawings, please see the Microchip Packaging Specification located at http://www.microchip.com/packaging

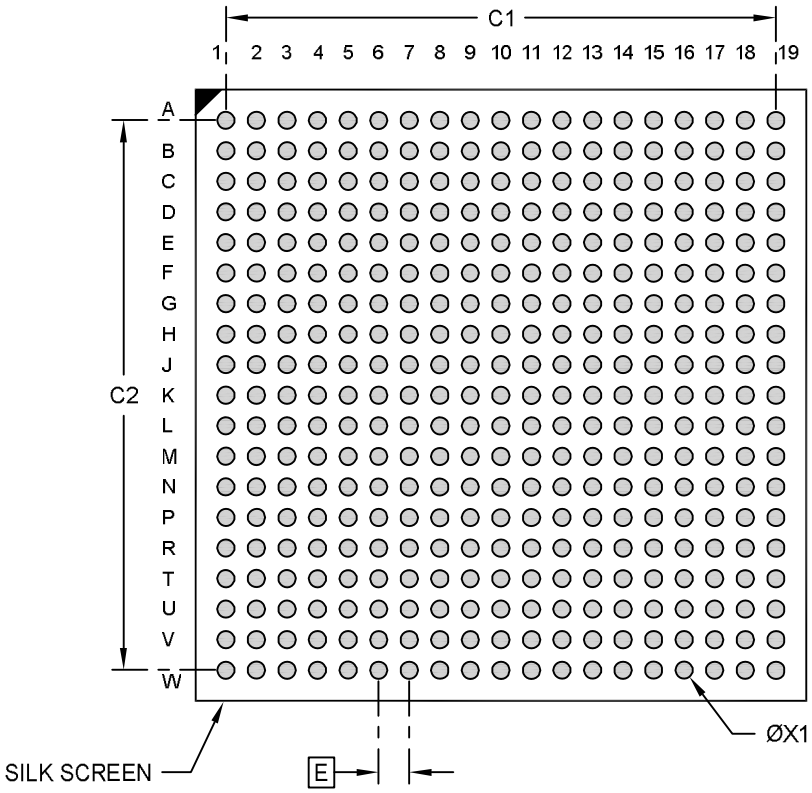

RECOMMENDED LAND PATTERN

Units		MILLIMETERS		
Dimension Limits		MIN	NOM	MAX
Contact Pitch	E		0.80 BSC	
Contact Pad Spacing	C1		14.40	
Contact Pad Spacing	C2		14.40	
Contact Pad Width (X20)	X1			0.45

Notes:

1. Dimensioning and tolerancing per ASME Y14.5M
   BSC: Basic Dimension. Theoretically exact value shown without tolerances.

Microchip Technology Drawing C04-23149-DYB Rev A

9.2 289-ball TFBGA

Note: For the most current package drawings, please see the Microchip Packaging Specification located at http://www.microchip.com/packaging.

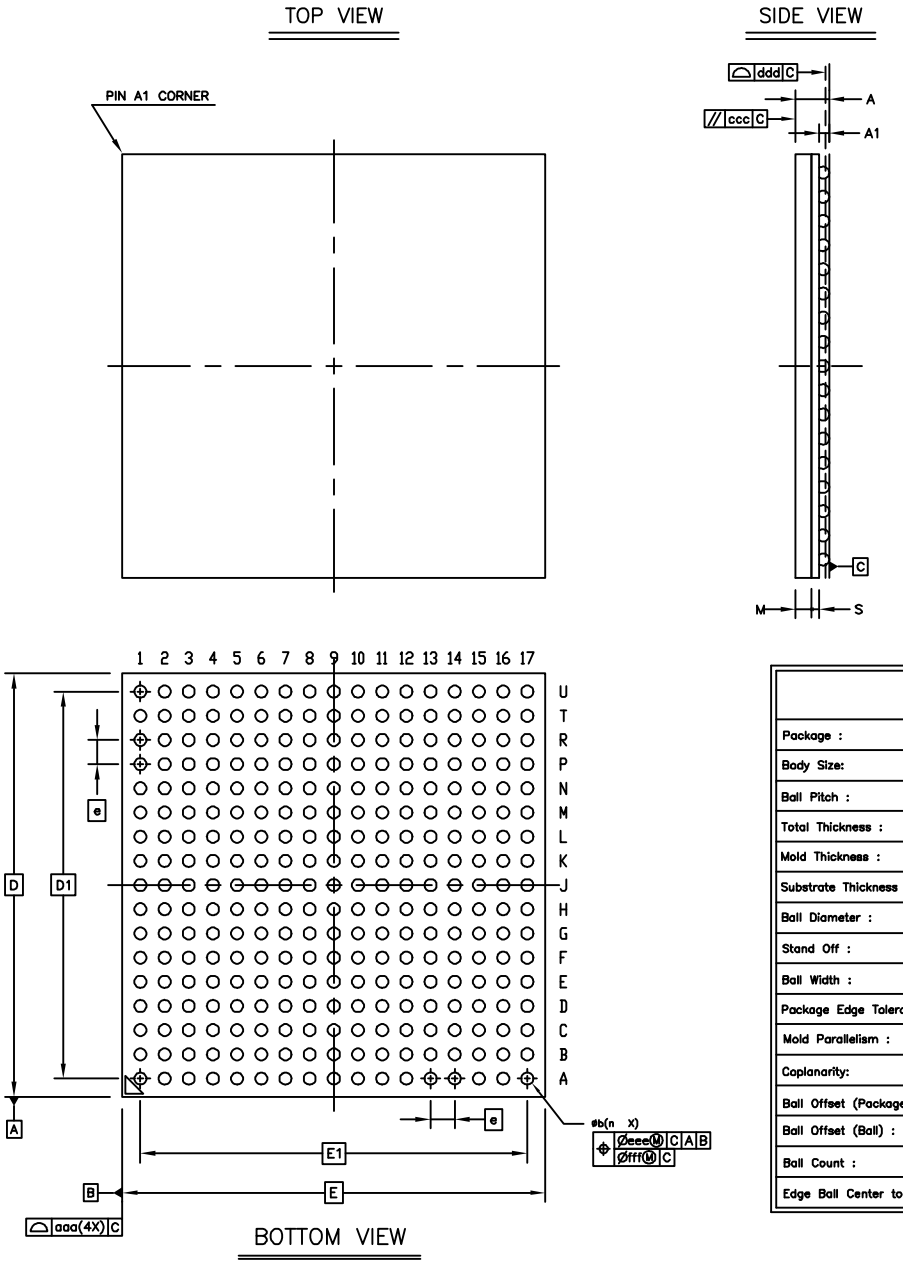

		Symbol	Common Dimensions MIN.	NOM.	MAX.
Package :			SBS TFBGA		
Body Size:	X	E	14.000		
	Y	D	14.000		
Ball Pitch :		e	0.800		
Total Thickness :		A			1.200
Mold Thickness :		M	0.530 Ref.		
Substrate Thickness :		S	0.260 Ref.		
Ball Diameter :			0.400		
Stand Off :		A1	0.270	–	0.370
Ball Width :		b	0.380	–	0.480
Package Edge Tolerance :		aaa	0.150		
Mold Parallelism :		ccc	0.200		
Coplanarity:		ddd	0.120		
Ball Offset (Package) :		eee	0.150		
Ball Offset (Ball) :		fff	0.080		
Ball Count :		n	289		
Edge Ball Center to Center :	X	E1	12.800		
	Y	D1	12.800		

Table 9-1. 289-ball TFBGA Package Characteristics

Moisture Sensitivity Level	3

Table 9-2. Device and 289-ball TFBGA Package Weight

Device	Weight (mg)
ATSAMA5D27C-D5M (512 Mb)	390

.....continued	
Device	**Weight (mg)**
ATSAMA5D28C-D1G (1 Gbit)	400

Table 9-3. Package Reference

JEDEC Drawing Reference	NA
J-STD-609 Classification	e8

Table 9-4. 289-ball TFBGA Package Information

Ball Land	0.450 mm ±0.05
Nominal Ball Diameter	0.4 mm
Solder Mask Opening	0.350 mm ±0.05
Solder Mask Definition	SMD
Solder	OSP

9.3 196-ball TFBGA

For mechanical characteristics of the 196-ball TFBGA package, refer to the *SAMA5D2 Series* data sheet, ref. no. DS60001476, available on www.microchip.com.

Note: The weight of the SAMA5D2 SIP is not the same as the weight of SAMA5D2. The SIP weight is given below:

Table 9-5. Device and 196-ball TFBGA Package Weight

Device	Weight (mg)
ATSAMA5D225C-D1M (128 Mb)	240

10. Ordering Information

Table 10-1. Ordering Information

Ordering Code	MRL	Package	Carrier Type	Operating Temperature Range
ATSAMA5D225C-D1M-CU	C	BGA196	Tray	-40°C to +85°C
ATSAMA5D225C-D1M-CUR			Tape & Reel	
ATSAMA5D27C-D5M-CU		BGA289	Tray	
ATSAMA5D27C-D5M-CUR			Tape & Reel	
ATSAMA5D27C-D1G-CU			Tray	
ATSAMA5D27C-D1G-CUR			Tape & Reel	
ATSAMA5D28C-D1G-CU			Tray	
ATSAMA5D28C-D1G-CUR			Tape & Reel	
ATSAMA5D27C-LD1G-CU		BGA361	Tray	
ATSAMA5D27C-LD1G-CUR			Tape & Reel	
ATSAMA5D27C-LD2G-CU			Tray	
ATSAMA5D27C-LD2G-CUR			Tape & Reel	
ATSAMA5D28C-LD1G-CU			Tray	
ATSAMA5D28C-LD1G-CUR			Tape & Reel	
ATSAMA5D28C-LD2G-CU			Tray	
ATSAMA5D28C-LD2G-CUR			Tape & Reel	

11. Revision History

11.1 DS60001484B - 11/2018

Changes
Added 1 Gbit and 2 Gbit LPDDR2 memory options. Added 361-ball TFBGA package option and mechanical drawing.
Pinout: added PTC signals.
Added section Electrical Characteristics.

11.2 DS60001484A - 09/2017

Changes
First issue.

The Microchip Web Site

Microchip provides online support via our web site at http://www.microchip.com/. This web site is used as a means to make files and information easily available to customers. Accessible by using your favorite Internet browser, the web site contains the following information:

- **Product Support** – Data sheets and errata, application notes and sample programs, design resources, user's guides and hardware support documents, latest software releases and archived software
- **General Technical Support** – Frequently Asked Questions (FAQ), technical support requests, online discussion groups, Microchip consultant program member listing
- **Business of Microchip** – Product selector and ordering guides, latest Microchip press releases, listing of seminars and events, listings of Microchip sales offices, distributors and factory representatives

Customer Change Notification Service

Microchip's customer notification service helps keep customers current on Microchip products. Subscribers will receive e-mail notification whenever there are changes, updates, revisions or errata related to a specified product family or development tool of interest.

To register, access the Microchip web site at http://www.microchip.com/. Under "Support", click on "Customer Change Notification" and follow the registration instructions.

Customer Support

Users of Microchip products can receive assistance through several channels:

- Distributor or Representative
- Local Sales Office
- Field Application Engineer (FAE)
- Technical Support

Customers should contact their distributor, representative or Field Application Engineer (FAE) for support. Local sales offices are also available to help customers. A listing of sales offices and locations is included in the back of this document.

Technical support is available through the web site at: http://www.microchip.com/support

Product Identification System

To order or obtain information, e.g., on pricing or delivery, refer to the factory or the listed sales office.

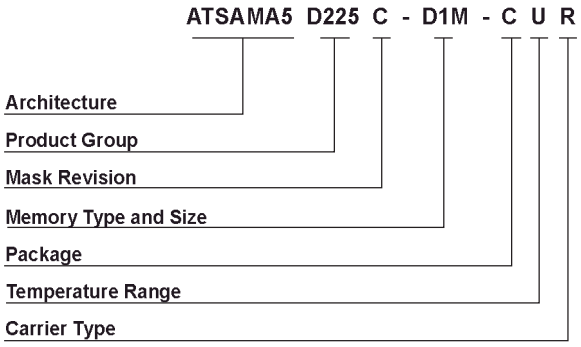

Architecture:	ATSAMA5	= Arm Cortex-A5 CPU
Product Group:	D225	= 196-ball general-purpose microprocessor family
	D27	= 289-ball or 361-ball general-purpose microprocessor family
	D28	
Memory Type and Size:	D1M	= 128-Mbit DDR2 SDRAM
	D5M	= 512-Mbit DDR2 SDRAM
	D1G	= 1-Gigabit DDR2 SDRAM
	LD1G	= 1-Gigabit LPDDR2 SDRAM
	LD2G	= 2-Gigabit LPDDR2 SDRAM
Mask Revision:	C	
Package:	C	= BGA
Temperature Range:	U	= -40°C to +85°C (Industrial)
Carrier Type:	Blank	= Standard packaging (tray)
	R	= Tape and Reel

Examples:

- ATSAMA5D225C-D1M-CU = ARM Cortex-A5 general-purpose microprocessor, 128-Mbit DDR2 SDRAM, 196-ball, Industrial temperature, BGA Package.

Note: Tape and Reel identifier only appears in the catalog part number description. This identifier is used for ordering purposes and is not printed on the device package

Microchip Devices Code Protection Feature

Note the following details of the code protection feature on Microchip devices:

- Microchip products meet the specification contained in their particular Microchip Data Sheet.

- Microchip believes that its family of products is one of the most secure families of its kind on the market today, when used in the intended manner and under normal conditions.
- There are dishonest and possibly illegal methods used to breach the code protection feature. All of these methods, to our knowledge, require using the Microchip products in a manner outside the operating specifications contained in Microchip's Data Sheets. Most likely, the person doing so is engaged in theft of intellectual property.
- Microchip is willing to work with the customer who is concerned about the integrity of their code.
- Neither Microchip nor any other semiconductor manufacturer can guarantee the security of their code. Code protection does not mean that we are guaranteeing the product as "unbreakable."

Code protection is constantly evolving. We at Microchip are committed to continuously improving the code protection features of our products. Attempts to break Microchip's code protection feature may be a violation of the Digital Millennium Copyright Act. If such acts allow unauthorized access to your software or other copyrighted work, you may have a right to sue for relief under that Act.

Legal Notice

Information contained in this publication regarding device applications and the like is provided only for your convenience and may be superseded by updates. It is your responsibility to ensure that your application meets with your specifications. MICROCHIP MAKES NO REPRESENTATIONS OR WARRANTIES OF ANY KIND WHETHER EXPRESS OR IMPLIED, WRITTEN OR ORAL, STATUTORY OR OTHERWISE, RELATED TO THE INFORMATION, INCLUDING BUT NOT LIMITED TO ITS CONDITION, QUALITY, PERFORMANCE, MERCHANTABILITY OR FITNESS FOR PURPOSE. Microchip disclaims all liability arising from this information and its use. Use of Microchip devices in life support and/or safety applications is entirely at the buyer's risk, and the buyer agrees to defend, indemnify and hold harmless Microchip from any and all damages, claims, suits, or expenses resulting from such use. No licenses are conveyed, implicitly or otherwise, under any Microchip intellectual property rights unless otherwise stated.

Trademarks

The Microchip name and logo, the Microchip logo, AnyRate, AVR, AVR logo, AVR Freaks, BitCloud, chipKIT, chipKIT logo, CryptoMemory, CryptoRF, dsPIC, FlashFlex, flexPWR, Heldo, JukeBlox, KeeLoq, Kleer, LANCheck, LINK MD, maXStylus, maXTouch, MediaLB, megaAVR, MOST, MOST logo, MPLAB, OptoLyzer, PIC, picoPower, PICSTART, PIC32 logo, Prochip Designer, QTouch, SAM-BA, SpyNIC, SST, SST Logo, SuperFlash, tinyAVR, UNI/O, and XMEGA are registered trademarks of Microchip Technology Incorporated in the U.S.A. and other countries.

ClockWorks, The Embedded Control Solutions Company, EtherSynch, Hyper Speed Control, HyperLight Load, IntelliMOS, mTouch, Precision Edge, and Quiet-Wire are registered trademarks of Microchip Technology Incorporated in the U.S.A.

Adjacent Key Suppression, AKS, Analog-for-the-Digital Age, Any Capacitor, AnyIn, AnyOut, BodyCom, CodeGuard, CryptoAuthentication, CryptoAutomotive, CryptoCompanion, CryptoController, dsPICDEM, dsPICDEM.net, Dynamic Average Matching, DAM, ECAN, EtherGREEN, In-Circuit Serial Programming, ICSP, INICnet, Inter-Chip Connectivity, JitterBlocker, KleerNet, KleerNet logo, memBrain, Mindi, MiWi, motorBench, MPASM, MPF, MPLAB Certified logo, MPLIB, MPLINK, MultiTRAK, NetDetach, Omniscient Code Generation, PICDEM, PICDEM.net, PICkit, PICtail, PowerSmart, PureSilicon, QMatrix, REAL ICE, Ripple Blocker, SAM-ICE, Serial Quad I/O, SMART-I.S., SQI, SuperSwitcher, SuperSwitcher II, Total

Endurance, TSHARC, USBCheck, VariSense, ViewSpan, WiperLock, Wireless DNA, and ZENA are trademarks of Microchip Technology Incorporated in the U.S.A. and other countries.

SQTP is a service mark of Microchip Technology Incorporated in the U.S.A.

Silicon Storage Technology is a registered trademark of Microchip Technology Inc. in other countries.

GestIC is a registered trademark of Microchip Technology Germany II GmbH & Co. KG, a subsidiary of Microchip Technology Inc., in other countries.

All other trademarks mentioned herein are property of their respective companies.

© 2018, Microchip Technology Incorporated, Printed in the U.S.A., All Rights Reserved.

ISBN: 978-1-5224-3959-2

Quality Management System Certified by DNV

ISO/TS 16949

Microchip received ISO/TS-16949:2009 certification for its worldwide headquarters, design and wafer fabrication facilities in Chandler and Tempe, Arizona; Gresham, Oregon and design centers in California and India. The Company's quality system processes and procedures are for its PIC® MCUs and dsPIC® DSCs, KEELOQ® code hopping devices, Serial EEPROMs, microperipherals, nonvolatile memory and analog products. In addition, Microchip's quality system for the design and manufacture of development systems is ISO 9001:2000 certified.

Worldwide Sales and Service

AMERICAS	ASIA/PACIFIC	ASIA/PACIFIC	EUROPE
Corporate Office	**Asia Pacific Office**	**China - Xiamen**	**Austria - Wels**
2355 West Chandler Blvd.	Suites 3707-14, 37th Floor	Tel: 86-592-2388138	Tel: 43-7242-2244-39
Chandler, AZ 85224-6199	Tower 6, The Gateway	Fax: 86-592-2388130	Fax: 43-7242-2244-393
Tel: 480-792-7200	Harbour City, Kowloon	**China - Zhuhai**	**Denmark - Copenhagen**
Fax: 480-792-7277	**Hong Kong**	Tel: 86-756-3210040	Tel: 45-4450-2828
Technical Support:	Tel: 852-2943-5100	Fax: 86-756-3210049	Fax: 45-4485-2829
http://www.microchip.com/	Fax: 852-2401-3431	**India - Bangalore**	**Finland - Espoo**
support	**Australia - Sydney**	Tel: 91-80-3090-4444	Tel: 358-9-4520-820
Web Address:	Tel: 61-2-9868-6733	Fax: 91-80-3090-4123	**France - Paris**
www.microchip.com	Fax: 61-2-9868-6755	**India - New Delhi**	Tel: 33-1-69-53-63-20
Atlanta	**China - Beijing**	Tel: 91-11-4160-8631	Fax: 33-1-69-30-90-79
Duluth, GA	Tel: 86-10-8569-7000	Fax: 91-11-4160-8632	**Germany - Garching**
Tel: 678-957-9614	Fax: 86-10-8528-2104	**India - Pune**	Tel: 49-8931-9700
Fax: 678-957-1455	**China - Chengdu**	Tel: 91-20-3019-1500	**Germany - Haan**
Austin, TX	Tel: 86-28-8665-5511	**Japan - Osaka**	Tel: 49-2129-3766400
Tel: 512-257-3370	Fax: 86-28-8665-7889	Tel: 81-6-6152-7160	**Germany - Heilbronn**
Boston	**China - Chongqing**	Fax: 81-6-6152-9310	Tel: 49-7131-67-3636
Westborough, MA	Tel: 86-23-8980-9588	**Japan - Tokyo**	**Germany - Karlsruhe**
Tel: 774-760-0087	Fax: 86-23-8980-9500	Tel: 81-3-6880- 3770	Tel: 49-721-625370
Fax: 774-760-0088	**China - Dongguan**	Fax: 81-3-6880-3771	**Germany - Munich**
Chicago	Tel: 86-769-8702-9880	**Korea - Daegu**	Tel: 49-89-627-144-0
Itasca, IL	**China - Guangzhou**	Tel: 82-53-744-4301	Fax: 49-89-627-144-44
Tel: 630-285-0071	Tel: 86-20-8755-8029	Fax: 82-53-744-4302	**Germany - Rosenheim**
Fax: 630-285-0075	**China - Hangzhou**	**Korea - Seoul**	Tel: 49-8031-354-560
Dallas	Tel: 86-571-8792-8115	Tel: 82-2-554-7200	**Israel - Ra'anana**
Addison, TX	Fax: 86-571-8792-8116	Fax: 82-2-558-5932 or	Tel: 972-9-744-7705
Tel: 972-818-7423	**China - Hong Kong SAR**	82-2-558-5934	**Italy - Milan**
Fax: 972-818-2924	Tel: 852-2943-5100	**Malaysia - Kuala Lumpur**	Tel: 39-0331-742611
Detroit	Fax: 852-2401-3431	Tel: 60-3-6201-9857	Fax: 39-0331-466781
Novi, MI	**China - Nanjing**	Fax: 60-3-6201-9859	**Italy - Padova**
Tel: 248-848-4000	Tel: 86-25-8473-2460	**Malaysia - Penang**	Tel: 39-049-7625286
Houston, TX	Fax: 86-25-8473-2470	Tel: 60-4-227-8870	**Netherlands - Drunen**
Tel: 281-894-5983	**China - Qingdao**	Fax: 60-4-227-4068	Tel: 31-416-690399
Indianapolis	Tel: 86-532-8502-7355	**Philippines - Manila**	Fax: 31-416-690340
Noblesville, IN	Fax: 86-532-8502-7205	Tel: 63-2-634-9065	**Norway - Trondheim**
Tel: 317-773-8323	**China - Shanghai**	Fax: 63-2-634-9069	Tel: 47-7289-7561
Fax: 317-773-5453	Tel: 86-21-3326-8000	**Singapore**	**Poland - Warsaw**
Tel: 317-536-2380	Fax: 86-21-3326-8021	Tel: 65-6334-8870	Tel: 48-22-3325737
Los Angeles	**China - Shenyang**	Fax: 65-6334-8850	**Romania - Bucharest**
Mission Viejo, CA	Tel: 86-24-2334-2829	**Taiwan - Hsin Chu**	Tel: 40-21-407-87-50
Tel: 949-462-9523	Fax: 86-24-2334-2393	Tel: 886-3-5778-366	**Spain - Madrid**
Fax: 949-462-9608	**China - Shenzhen**	Fax: 886-3-5770-955	Tel: 34-91-708-08-90
Tel: 951-273-7800	Tel: 86-755-8864-2200	**Taiwan - Kaohsiung**	Fax: 34-91-708-08-91
Raleigh, NC	Fax: 86-755-8203-1760	Tel: 886-7-213-7830	**Sweden - Gothenberg**
Tel: 919-844-7510	**China - Wuhan**	**Taiwan - Taipei**	Tel: 46-31-704-60-40
New York, NY	Tel: 86-27-5980-5300	Tel: 886-2-2508-8600	**Sweden - Stockholm**
Tel: 631-435-6000	Fax: 86-27-5980-5118	Fax: 886-2-2508-0102	Tel: 46-8-5090-4654
San Jose, CA	**China - Xian**	**Thailand - Bangkok**	**UK - Wokingham**
Tel: 408-735-9110	Tel: 86-29-8833-7252	Tel: 66-2-694-1351	Tel: 44-118-921-5800
Tel: 408-436-4270	Fax: 86-29-8833-7256	Fax: 66-2-694-1350	Fax: 44-118-921-5820
Canada - Toronto			
Tel: 905-695-1980			
Fax: 905-695-2078			

SYST-18ZKDK727 - Data Sheet - SAMA5D2 MPU SiP with up to 1Gbit DDR2 or 2Gbit LPDDR2

Affected Catalog Part Numbers(CPN)

ATSAMA5D21B-CU
ATSAMA5D21B-CUR
ATSAMA5D21C-CU
ATSAMA5D21C-CUR
ATSAMA5D225C-D1M-CU
ATSAMA5D225C-D1M-CUR
ATSAMA5D22A-CU
ATSAMA5D22A-CUR
ATSAMA5D22B-CN
ATSAMA5D22B-CNR
ATSAMA5D22B-CU
ATSAMA5D22B-CUR
ATSAMA5D22C-CN
ATSAMA5D22C-CNR
ATSAMA5D22C-CU
ATSAMA5D22C-CUR
ATSAMA5D23B-CN
ATSAMA5D23B-CNR
ATSAMA5D23B-CU
ATSAMA5D23B-CUR
ATSAMA5D23C-CN
ATSAMA5D23C-CNR
ATSAMA5D23C-CU
ATSAMA5D23C-CUR
ATSAMA5D24A-CU
ATSAMA5D24A-CUR
ATSAMA5D24B-CU
ATSAMA5D24B-CUR
ATSAMA5D24C-CU
ATSAMA5D24C-CUF01
ATSAMA5D24C-CUR
ATSAMA5D24C-CURF01
ATSAMA5D26B-CN
ATSAMA5D26B-CNR
ATSAMA5D26B-CU
ATSAMA5D26B-CUR
ATSAMA5D26C-CN
ATSAMA5D26C-CNR
ATSAMA5D26C-CU
ATSAMA5D26C-CUR
ATSAMA5D27-SOM1
ATSAMA5D27A-CU

ATSAMA5D27A-CUR
ATSAMA5D27B-CN
ATSAMA5D27B-CNR
ATSAMA5D27B-CU
ATSAMA5D27B-CUR
ATSAMA5D27C-CN
ATSAMA5D27C-CNR
ATSAMA5D27C-CNRVAO
ATSAMA5D27C-CNVAO
ATSAMA5D27C-CU
ATSAMA5D27C-CUR
ATSAMA5D27C-D1G-CU
ATSAMA5D27C-D1G-CUR
ATSAMA5D27C-D5M-CU
ATSAMA5D27C-D5M-CUR
ATSAMA5D28A-CU
ATSAMA5D28B-CN
ATSAMA5D28B-CNR
ATSAMA5D28B-CU
ATSAMA5D28B-CUR
ATSAMA5D28C-CN
ATSAMA5D28C-CNR
ATSAMA5D28C-CU
ATSAMA5D28C-CUR
ATSAMA5D28C-D1G-CU
ATSAMA5D28C-D1G-CUR