Product Change Notification - SYST-31OHHK153

Date:

05 Nov 2018

Product Category:

Clock and Timing - Oscillators

Affected CPNs:

Notification subject:

Data Sheet - DSC1103 DSC1123 Data Sheet

Notification text:

SYST-31OHHK153

Microchip has released a new DeviceDoc for the DSC1103 DSC1123 Data Sheet of devices. If you are using one of these devices please read the document located at DSC1103 DSC1123 Data Sheet.

Data Sheet - DSC1103 DSC1123 Data Sheet

Notification Status: Final

Description of Change: 1) Added ±20 ppm stability references throughout document. 2) Added Section 7.0, Recommended Board Layout.

Impacts to Data Sheet: None

Reason for Change: To Improve Manufacturability

Change Implementation Status: Complete

Date Document Changes Effective: 05 Nov 2018

NOTE: Please be advised that this is a change to the document only the product has not been changed.

Markings to Distinguish Revised from Unrevised Devices: N/A

Attachment(s):

DSC1103 DSC1123 Data Sheet

Please contact your local Microchip sales office with questions or concerns regarding this notification.

Terms and Conditions:

If you wish to receive Microchip PCNs via email please register for our PCN email service at our PCN home page select register then fill in the required fields. You will find instructions about registering for Microchips PCN email service in the PCN FAQ section.
If you wish to change your PCN profile, including opt out, please go to the PCN home page select login and sign into your myMicrochip account. Select a profile option from the left navigation bar and make the applicable selections.

DSC1103/23

Low-Jitter Precision LVDS Oscillator

Features

- Low RMS Phase Jitter: <1 ps (typ.)
- High Stability: ±10 ppm, ±20 ppm, ±25 ppm, ±50 ppm
- Wide Temperature Range:
  - Ext. Industrial –40°C to +105°C
  - Industrial –40°C to +85°C
  - Ext. Commercial –20°C to +70°C
- High Supply Noise Rejection: –50 dBc
- Wide Frequency Range:
  - 2.3 MHz – 460 MHz
- Small Industry Standard Footprints
  - 2.5 mm x 2.0 mm
  - 3.2 mm x 2.5 mm
  - 5.0 mm x 3.2 mm
  - 7.0 mm x 5.0 mm
- Excellent Shock and Vibration Immunity
  - Qualified to MIL-STD-883
- High Reliability
  - 20x better MTF than quartz-based devices
- Low Current Consumption
- Supply Range of 2.25V to 3.63V
- Standby and Output Enable Functions
- Lead Free and RoHS-Compliant

Applications

- Storage Area Networks
  - SATA, SAS, Fibre Channel
- Passive Optical Networks
  - EPON, 10G-EPON, GPON, 10G-PON
- HD/SD/SDI Video and Surveillance
- PCI Express Gen 1/Gen 2/Gen 3
- Display Port

General Description

The DSC1103 and DSC1123 series of high performance oscillators utilizes a proven silicon MEMS technology to provide excellent jitter and stability over a wide range of supply voltages and temperatures. By eliminating the need for quartz or SAW technology, MEMS oscillators significantly enhance reliability and accelerate product development, while meeting stringent clock performance criteria for a variety of communications, storage, and networking applications.

DSC1103 has a standby feature allowing it to completely power-down when EN pin is pulled low. For DSC1123, only the outputs are disabled when EN is low. Both oscillators are available in industry standard packages, including the smallest 2.5 mm x 2.0 mm, and are drop-in replacements for standard 6-pin LVDS crystal oscillators.

Block Diagram

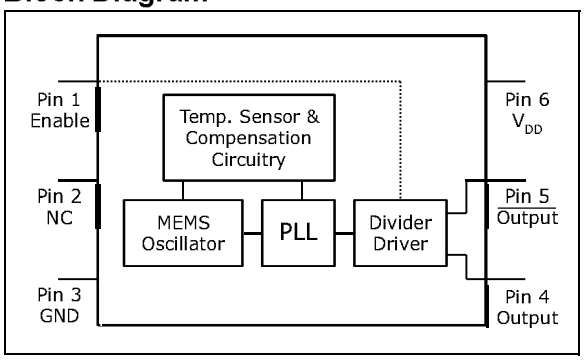

© 2017-2018 Microchip Technology Inc.

1.0 ELECTRICAL CHARACTERISTICS

Absolute Maximum Ratings †

Supply Voltage ..... –0.3V to +4.0V
Input Voltage ..... –0.3V to V_{DD}+0.3V
ESD Protection (HBM) ..... 4 kV
ESD Protection (MM) 400V
ESD Protection (CDM) ..... 1.5 kV

† Notice: Stresses above those listed under "Absolute Maximum Ratings" may cause permanent damage to the device. This is a stress rating only and functional operation of the device at those or any other conditions above those indicated in the operational sections of this specification is not intended. Exposure to maximum rating conditions for extended periods may affect device reliability.

ELECTRICAL CHARACTERISTICS

Specifications: V_{DD} = 3.3V; T_A = +25°C unless otherwise specified.

Parameters	Sym.	Min.	Typ.	Max.	Units	Conditions
Supply Voltage (Note 1)	V_{DD}	2.25	—	3.63	V	—
Supply Current	I_{DD}	—	—	0.095	mA	DSC1103, EN pin low; all outputs disabled.
		—	20	22		DSC1123, EN pin low; all outputs disabled.
Frequency Stability	Δf	—	—	±10	ppm	Includes frequency variations due to initial tolerance, temp., and power supply voltage.
		—	—	±20		
		—	—	±25		
		—	—	±50		
Aging - First Year	Δf_{Y1}	—	—	±5	ppm	One year at +25°C
Aging - After First Year	Δf_{Y2+}	—	—	<±1	ppm/yr	Year two and beyond at +25°C
Start-up Time (Note 2)	t_{SU}	—	—	5	ms	T = +25°C
Input Logic Levels	V_{IH}	0.75 x V_{DD}	—	—	V	Input logic high
	V_{IL}	—	—	0.25 x V_{DD}		Input logic low
Output Disable Time (Note 3)	t_{DA}	—	—	5	ns	—
Output Enable Time	t_{EN}	—	—	5	ms	DSC1103
		—	—	20	ns	DSC1123
Enable Pull-Up Resistor (Note 4)	R_{PU}	—	40	—	kΩ	Pull-up resistor exist.
LVDS Outputs						
Supply Current	I_{DD}	—	29	32	mA	Output enabled, R_L = 100Ω
Output Offset Voltage	V_{OS}	1.125	—	1.4	V	R = 100Ω Differential
Delta Offset Voltage	ΔV_{OS}	—	—	50	mV	—
Peak-to-Peak Output Swing	V_{PP}	—	350	—	mV	Single-Ended

Note 1: V_{DD} pin should be filtered with a 0.1 µF capacitor.
2: t_{SU} is time to 100 ppm stable output frequency after V_{DD} is applied and outputs are enabled.
3: See the Output Waveform section and the Test Circuit for more information.
4: Output is enabled if pad is floated or not connected.

© 2017-2018 Microchip Technology Inc.

ELECTRICAL CHARACTERISTICS (CONTINUED)

Specifications: V_{DD} = 3.3V; T_A = +25°C unless otherwise specified.

Parameters	Sym.	Min.	Typ.	Max.	Units	Conditions
Output Transition Rise/Fall Time (Note 3)	t_R/t_F	—	200	—	ps	20% to 80% R_L = 50Ω, C_L = 2 pF
Frequency	f_O	2.3	—	460	MHz	–20°C to +70°C & –40°C to +85°C
		3.3	—	460		–40°C to +105°C
Output Duty Cycle	SYM	48	—	52	%	Differential
Period Jitter	J_{PER}	—	2.5	—	ps_{RMS}	—
Integrated Phase Noise	J_{PH}	—	0.28	—	ps_{RMS}	200 kHz to 20 MHz @156.25 MHz
		—	0.4	—		100 kHz to 20 MHz @156.25 MHz
		—	1.7	2		12 kHz to 20 MHz @156.25 MHz

Note 1: V_{DD} pin should be filtered with a 0.1 µF capacitor.

2: t_{SU} is time to 100 ppm stable output frequency after V_{DD} is applied and outputs are enabled.

3: See the Output Waveform section and the Test Circuit for more information.

4: Output is enabled if pad is floated or not connected.

© 2017-2018 Microchip Technology Inc.

TEMPERATURE SPECIFICATIONS (Note 1)

Parameters	Sym.	Min.	Typ.	Max.	Units	Conditions
Temperature Ranges						
Operating Temperature Range	T_A	–20	—	+70	°C	Ordering Option E
	T_A	–40	—	+85	°C	Ordering Option I
	T_A	–40	—	+105	°C	Ordering Option L
Junction Temperature	T_J	—	—	+150	°C	—
Storage Temperature Range	T_S	–55	—	+150	°C	—
Soldering Temperature	—	—	—	+260	°C	40 sec. max.

Note 1: The maximum allowable power dissipation is a function of ambient temperature, the maximum allowable junction temperature, and the thermal resistance from junction to air (i.e., T_A, T_J, θ_{JA}). Exceeding the maximum allowable power dissipation will cause the device operating junction temperature to exceed the maximum +150°C rating. Sustained junction temperatures above +150°C can impact the device reliability.

© 2017-2018 Microchip Technology Inc.

2.0 PIN DESCRIPTIONS

The descriptions of the pins are listed in Table 2-1.

TABLE 2-1: PIN FUNCTION TABLE

Pin Number 7x5 with Pad	Pin Number 7x5 w/o Pad	Pin Number 5x3.2	Pin Number 3.2x2.5	Pin Number 2x2.5	Pin Name	Description
1	1	1	1	1	EN	Enable
2	2	2	2	2	NC	Do not connect
3	3	3	3	3	GND	Ground
4	4	4	4	4	OUT	LVDS clock output +
5	5	5	5	5	OUT–	LVDS clock output –
6	6	6	6	6	VDD	Supply voltage
PAD	—	—	—	—	PAD	Tie to Ground

TABLE 2-2: OUTPUT ENABLE MODES

EN Pin	DSC1103	DSC1123
High	Outputs Active	Outputs Active
NC	Outputs Active	Outputs Active
Low	Standby	Outputs Disabled

3.0 NOMINAL PERFORMANCE PARAMETERS

Unless otherwise specified, T = +25°C, V_{DD} = 3.3V.

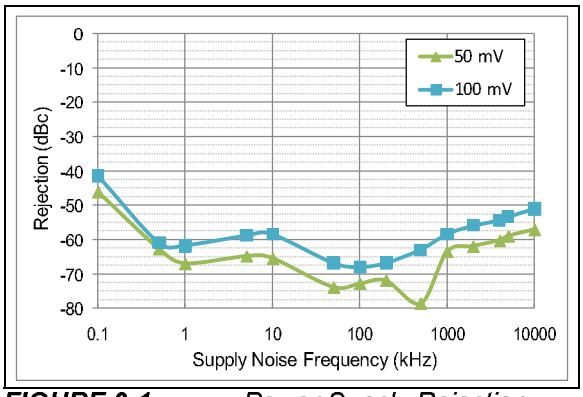

FIGURE 3-1: *Power Supply Rejection Ratio.*

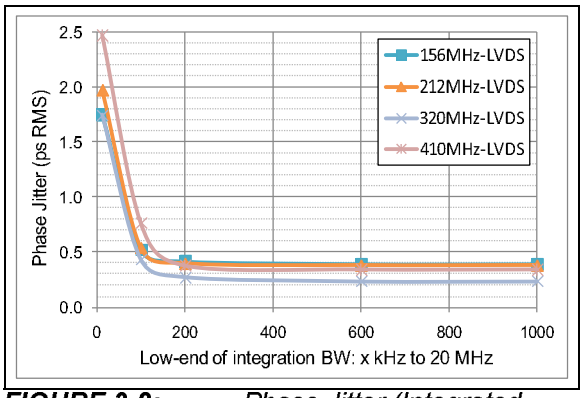

FIGURE 3-2: *Phase Jitter (Integrated Phase Noise).*

© 2017-2018 Microchip Technology Inc.

4.0 TERMINATION SCHEME

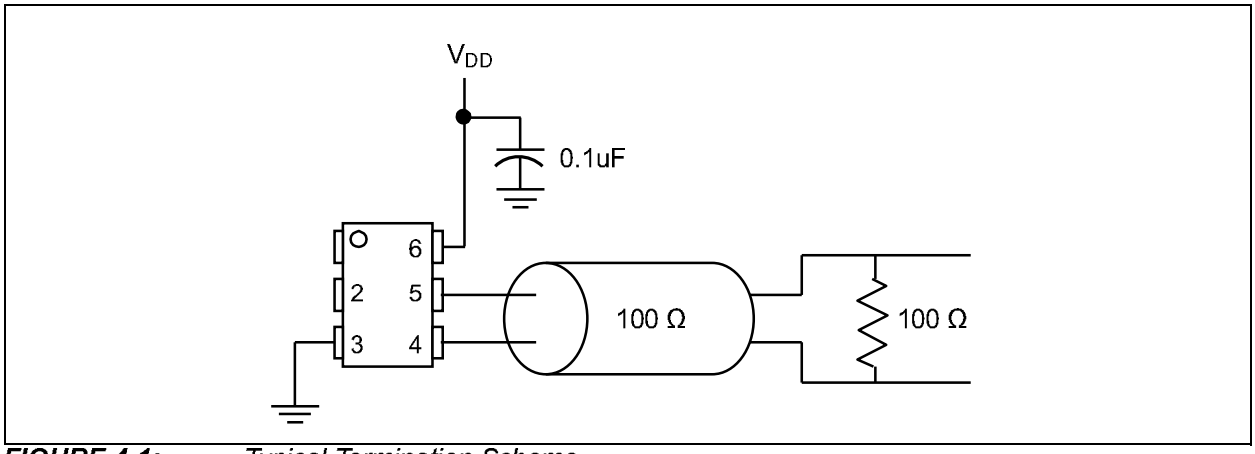

FIGURE 4-1: *Typical Termination Scheme.*

5.0 OUTPUT WAVEFORM

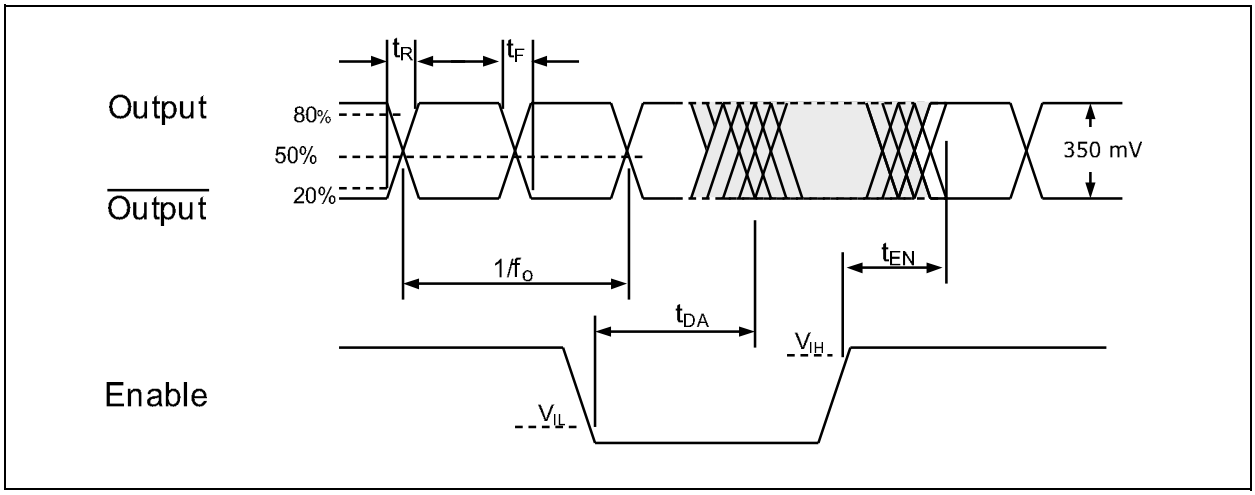

FIGURE 5-1: *Output Waveform.*

6.0 TEST CIRCUIT

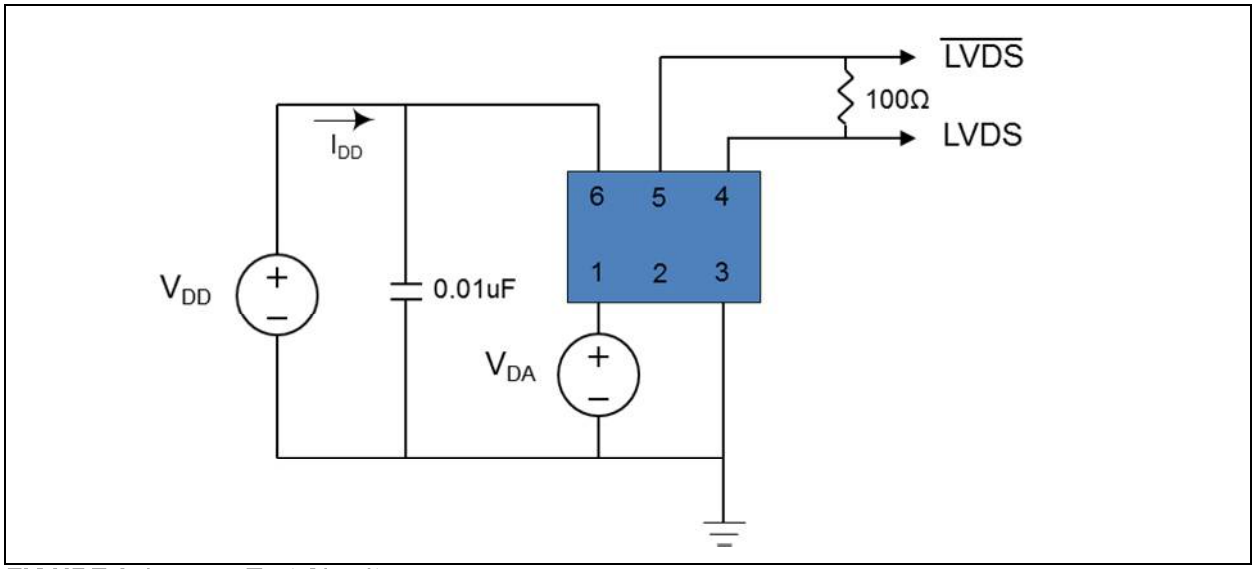

FIGURE 6-1: *Test Circuit.*

7.0 RECOMMENDED BOARD LAYOUT

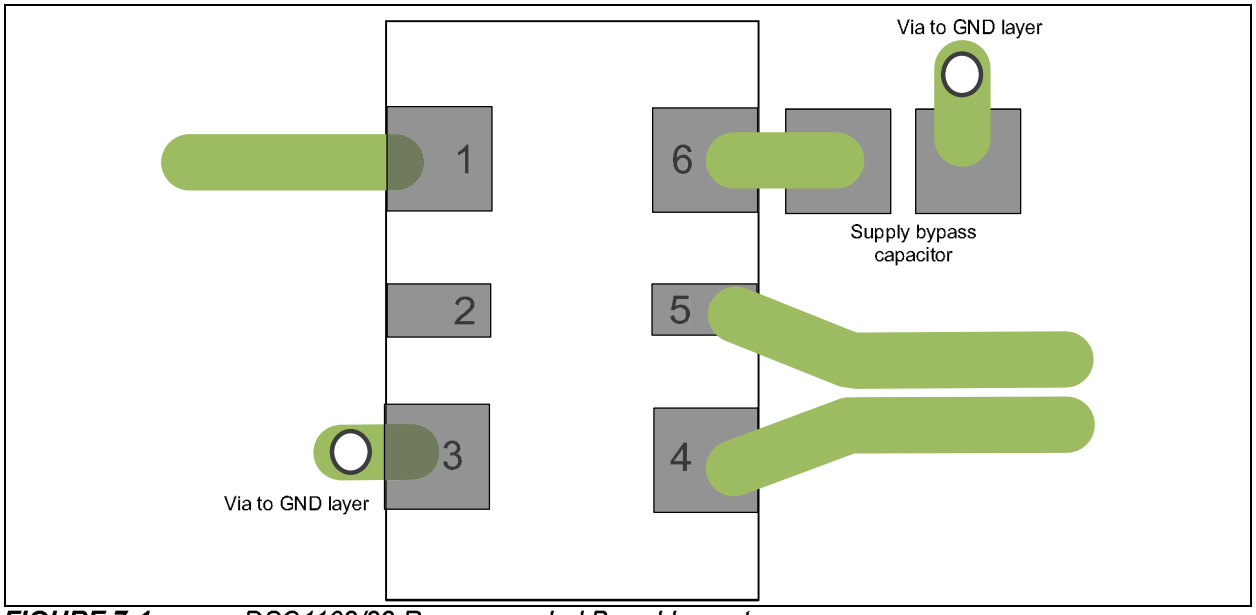

FIGURE 7-1: *DSC1103/23 Recommended Board Layout.*

© 2017-2018 Microchip Technology Inc.

8.0 SOLDER REFLOW PROFILE

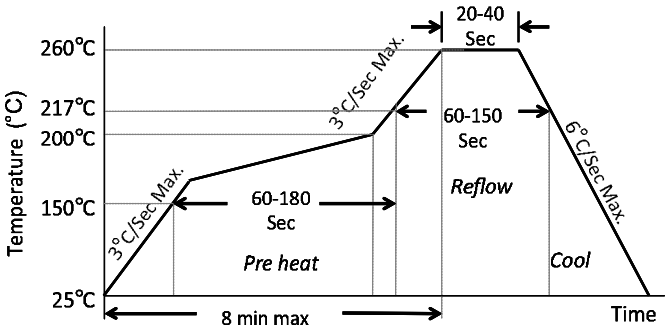

MSL 1 @ 260°C refer to JSTD-020C	
Ramp-Up Rate (200°C to Peak Temp)	3°C/sec. max.
Preheat Time 150°C to 200°C	60-180 sec.
Time Maintained above 217°C	60-150 sec.
Peak Temperature	255°C to 260°C
Time within 5°C of Actual Peak	20-40 sec.
Ramp-Down Rate	6°C/sec. max.
Time 25°C to Peak Temperature	8 minutes max.

9.0 PACKAGE MARKING INFORMATION

6-Lead VDFN 2.5 mm x 2.0 mm Package Outline and Recommended Land Pattern

6-Lead Very Thin Dual Flatpack No-Leads (J7A) - 2.5x2.0 mm Body [VDFN]

Note: For the most current package drawings, please see the Microchip Packaging Specification located at http://www.microchip.com/packaging

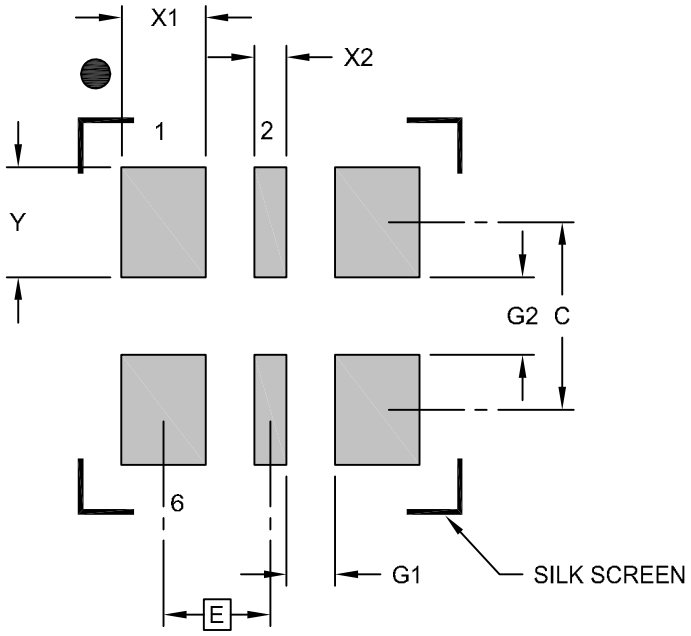

RECOMMENDED LAND PATTERN

Units		MILLIMETERS		
Dimension Limits		MIN	NOM	MAX
Contact Pitch	E		0.825 BSC	
Contact Pad Width (X4)	X1			0.65
Contact Pad Width (X2)	X2			0.25
Contact Pad Length (X6)	Y			0.85
Contact Pad Spacing	C		1.45	
Space Between Contacts (X4)	G1	0.38		
Space Between Contacts (X3)	G2	0.60		

Notes:

1. Dimensioning and tolerancing per ASME Y14.5M
   BSC: Basic Dimension. Theoretically exact value shown without tolerances.
2. For best soldering results, thermal vias, if used, should be filled or tented to avoid solder loss during reflow process

Microchip Technology Drawing C04-3005A

© 2017-2018 Microchip Technology Inc.

6-Lead Very Thin Dual Flatpack No-Leads (J7A) - 2.5x2.0 mm Body [VDFN]

Note: For the most current package drawings, please see the Microchip Packaging Specification located at http://www.microchip.com/packaging

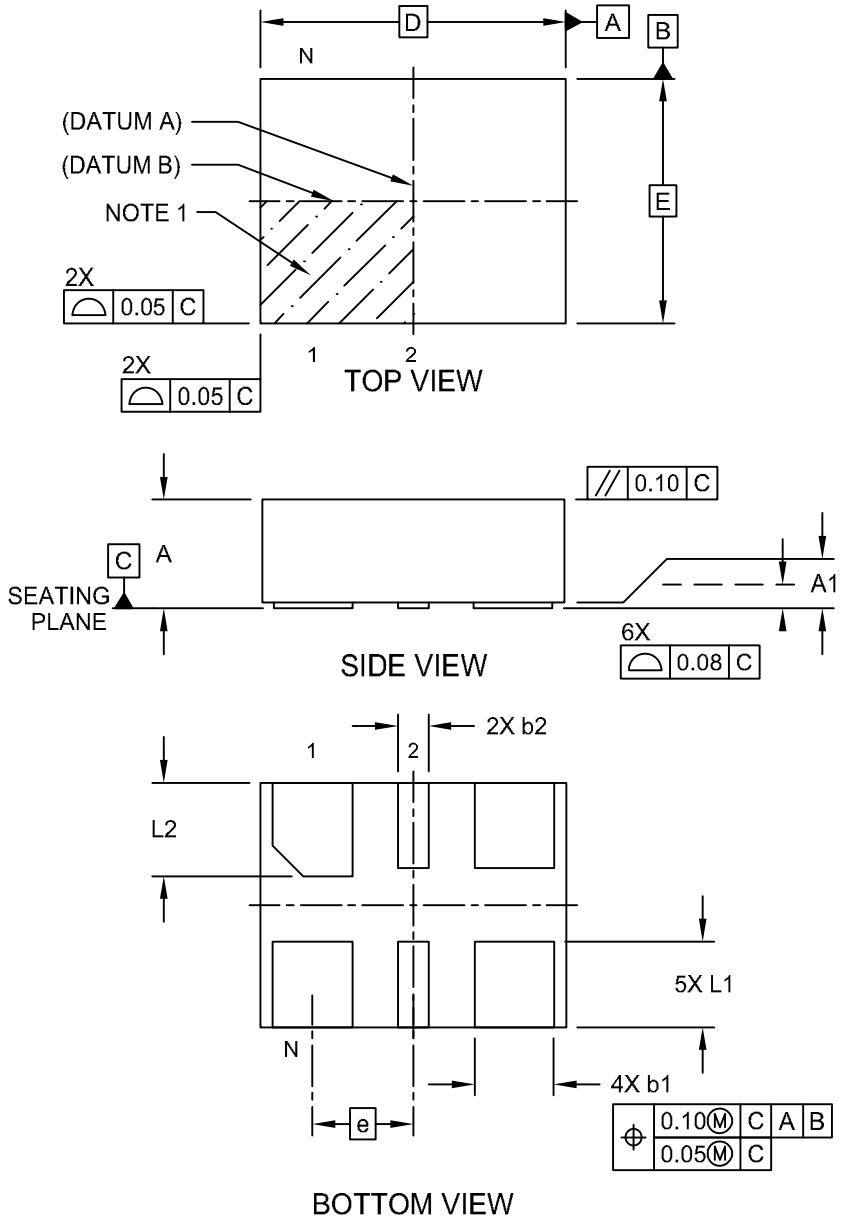

Microchip Technology Drawing C04-1005A Sheet 1 of 2

6-Lead Very Thin Dual Flatpack No-Leads (J7A) - 2.5x2.0 mm Body [VDFN]

Note: For the most current package drawings, please see the Microchip Packaging Specification located at http://www.microchip.com/packaging

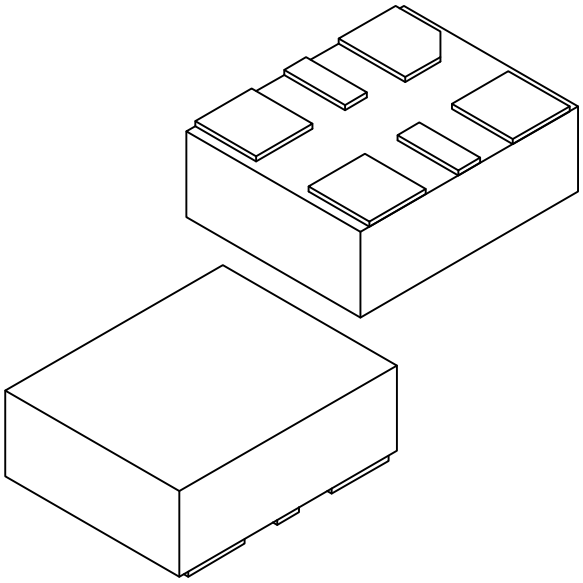

Units		MILLIMETERS		
Dimension Limits		MIN	NOM	MAX
Number of Terminals	N	6		
Pitch	e	0.825 BSC		
Overall Height	A	0.80	0.85	0.90
Standoff	A1	0.00	0.02	0.05
Overall Length	D	2.50 BSC		
Overall Width	E	2.00 BSC		
Terminal Width	b1	0.60	0.65	0.70
Terminal Width	b2	0.20	0.25	0.30
Terminal Length	L1	0.60	0.70	0.80
Terminal Length	L2	0.665	0.765	0.865

Notes:

1. Pin 1 visual index feature may vary, but must be located within the hatched area.
2. Package is saw singulated
3. Dimensioning and tolerancing per ASME Y14.5M

   BSC: Basic Dimension. Theoretically exact value shown without tolerances.

   REF: Reference Dimension, usually without tolerance, for information purposes only.

Microchip Technology Drawing C04-1005A Sheet 2 of 2

© 2017-2018 Microchip Technology Inc.

6-Lead VDFN 3.2 mm x 2.5 mm Package Outline and Recommended Land Pattern

6-Lead Very Thin Plastic Dual Flatpack No-Lead (H5A) - 3.2x2.5 mm Body [VDFN]

Note: For the most current package drawings, please see the Microchip Packaging Specification located at http://www.microchip.com/packaging

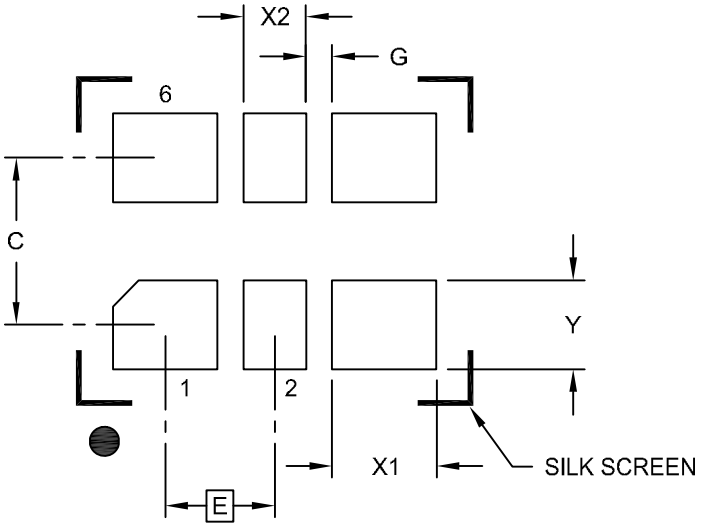

RECOMMENDED LAND PATTERN

Units		MILLIMETERS		
Dimension Limits		MIN	NOM	MAX
Contact Pitch	E		1.05 BSC	
Contact Pad Spacing	C		1.60	
Contact Pad Width (X4)	X1			1.00
Contact Pad Width (X2)	X2			0.60
Contact Pad Length (X6)	Y			0.85
Space Between Contacts (X4)	G1	0.25		

Notes:

1. Dimensioning and tolerancing per ASME Y14.5M
   BSC: Basic Dimension. Theoretically exact value shown without tolerances.

Microchip Technology Drawing C04-3007A

6-Lead Very Thin Plastic Dual Flatpack No-Lead (H5A) - 3.2x2.5 mm Body [VDFN]

Note: For the most current package drawings, please see the Microchip Packaging Specification located at http://www.microchip.com/packaging

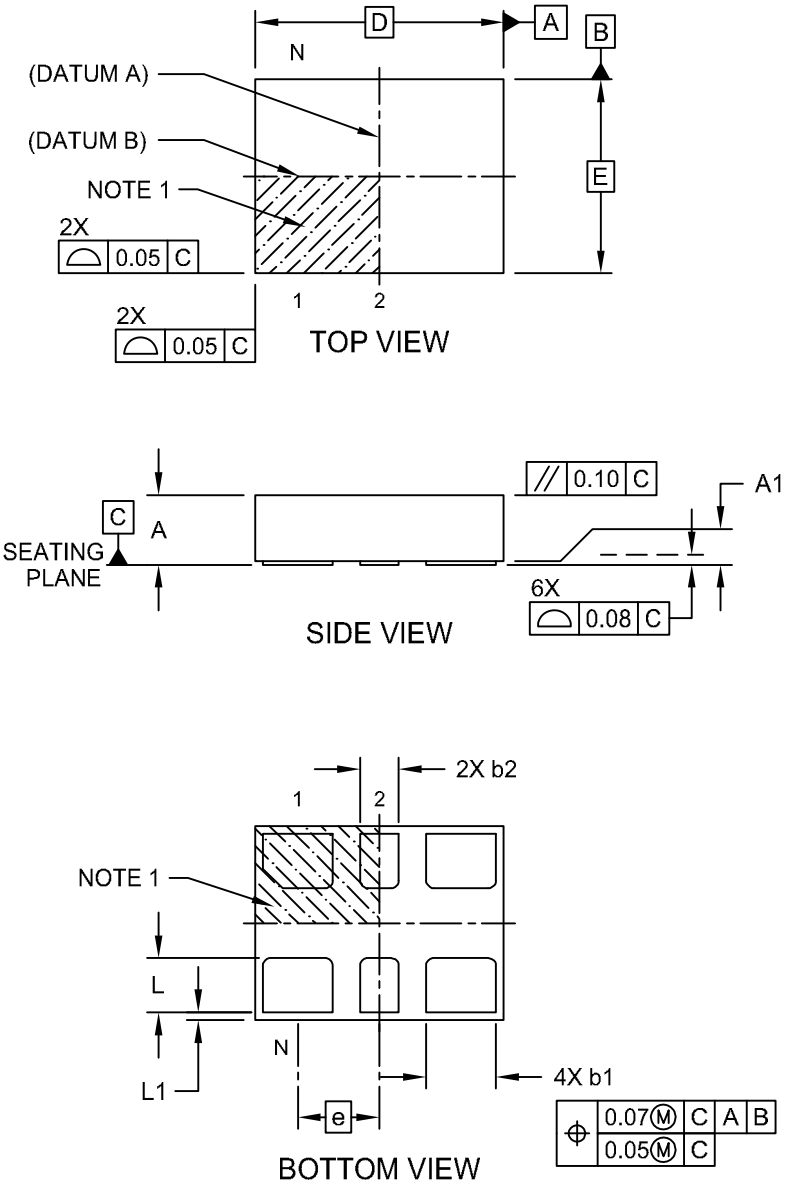

Microchip Technology Drawing C04-1007A Sheet 1 of 2

© 2017-2018 Microchip Technology Inc.

6-Lead Very Thin Plastic Dual Flatpack No-Lead (H5A) - 3.2x2.5 mm Body [VDFN]

Note: For the most current package drawings, please see the Microchip Packaging Specification located at http://www.microchip.com/packaging

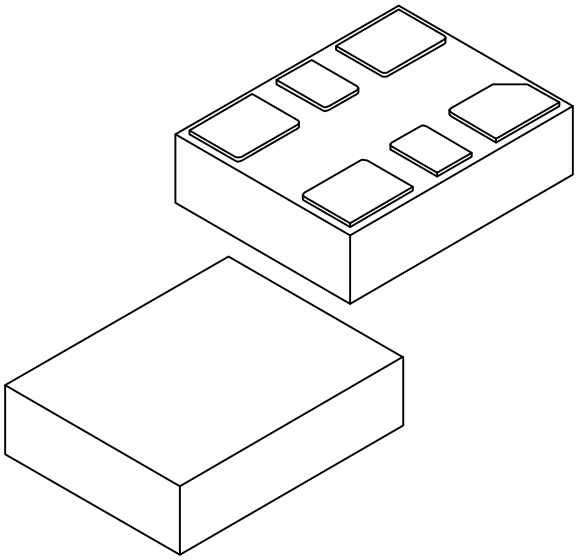

Units		MILLIMETERS		
Dimension Limits		MIN	NOM	MAX
Number of Terminals	N	6		
Pitch	e	1.05 BSC		
Overall Height	A	0.80	0.85	0.90
Standoff	A1	0.00	0.02	0.05
Overall Length	D	3.20 BSC		
Overall Width	E	2.50 BSC		
Terminal Width	b1	0.85	0.90	0.95
Terminal Width	b2	0.45	0.50	0.55
Terminal Length	L	0.65	0.70	0.75
Terminal Pullback	L1	0.10 REF		

Notes:

1. Pin 1 visual index feature may vary, but must be located within the hatched area.
2. Package is saw singulated
3. Dimensioning and tolerancing per ASME Y14.5M

   BSC: Basic Dimension. Theoretically exact value shown without tolerances.

   REF: Reference Dimension, usually without tolerance, for information purposes only.

Microchip Technology Drawing C04-1007A Sheet 2 of 2

6-Lead CDFN 5.0 mm x 3.2 mm Package Outline and Recommended Land Pattern

TITLE
6 LEAD CDFN 5.0x3.2mm COL PACKAGE OUTLINE & RECOMMENDED LAND PATTERN

DRAWING #	CDFN5032-6LD-PL-1	UNIT	MM

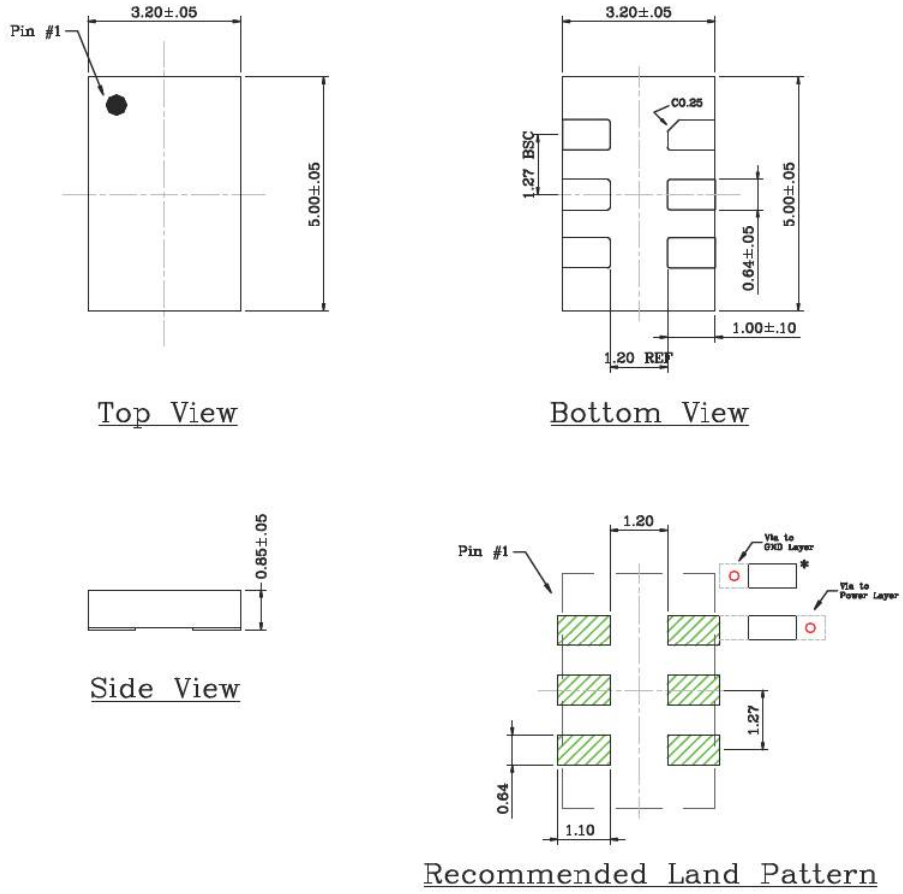

NOTE:

1. * Power Supply Decoupling Capacitor is required in Recommended Land Pattern.
2. Green shaded rectangles in Recommended Land Pattern are solder stencil opening.
3. Red circles in Recommended Land Pattern are thermal VIA.

Note: For the most current package drawings, please see the Microchip Packaging Specification located at http://www.microchip.com/packaging.

© 2017-2018 Microchip Technology Inc.

6-Lead VDFN 7.0 mm x 5.0 mm Package Outline and Recommended Land Pattern

6-Lead Very Thin Plastic Quad Flat, No Lead Package (H8A) - 7x5 mm Body [VDFN] With 2.8x1.8 mm Exposed Pad

Note: For the most current package drawings, please see the Microchip Packaging Specification located at http://www.microchip.com/packaging

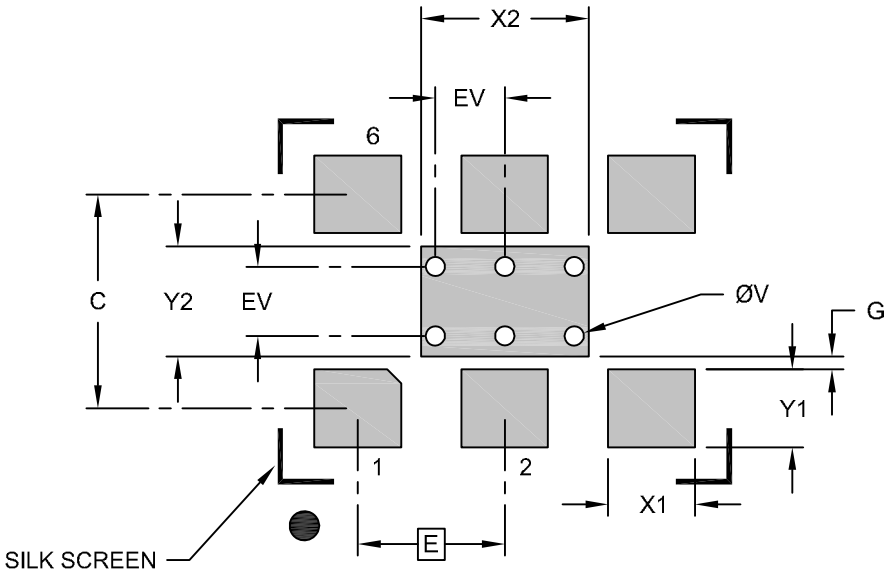

RECOMMENDED LAND PATTERN

Units		MILLIMETERS		
Dimension Limits		MIN	NOM	MAX
Contact Pitch	E		2.54 BSC	
Optional Center Pad Width	X2			2.90
Optional Center Pad Length	Y2			1.90
Contact Pad Spacing	C		3.70	
Contact Pad Width (X6)	X1			1.50
Contact Pad Length (X6)	Y1			1.35
Contact Pad to Center Pad (X2)	G	0.20		
Thermal Via Diameter (X6)	V		0.33	
Thermal Via Pitch	EV		1.20	

Notes:

1. Dimensioning and tolerancing per ASME Y14.5M
   BSC: Basic Dimension. Theoretically exact value shown without tolerances.
2. For best soldering results, thermal vias, if used, should be filled or tented to avoid solder loss during reflow process

Microchip Technology Drawing C04-3010A

6-Lead Very Thin Plastic Quad Flat, No Lead Package (H8A) - 7x5 mm Body [VDFN] With 2.8x1.8 mm Exposed Pad

Note:	For the most current package drawings, please see the Microchip Packaging Specification located at http://www.microchip.com/packaging

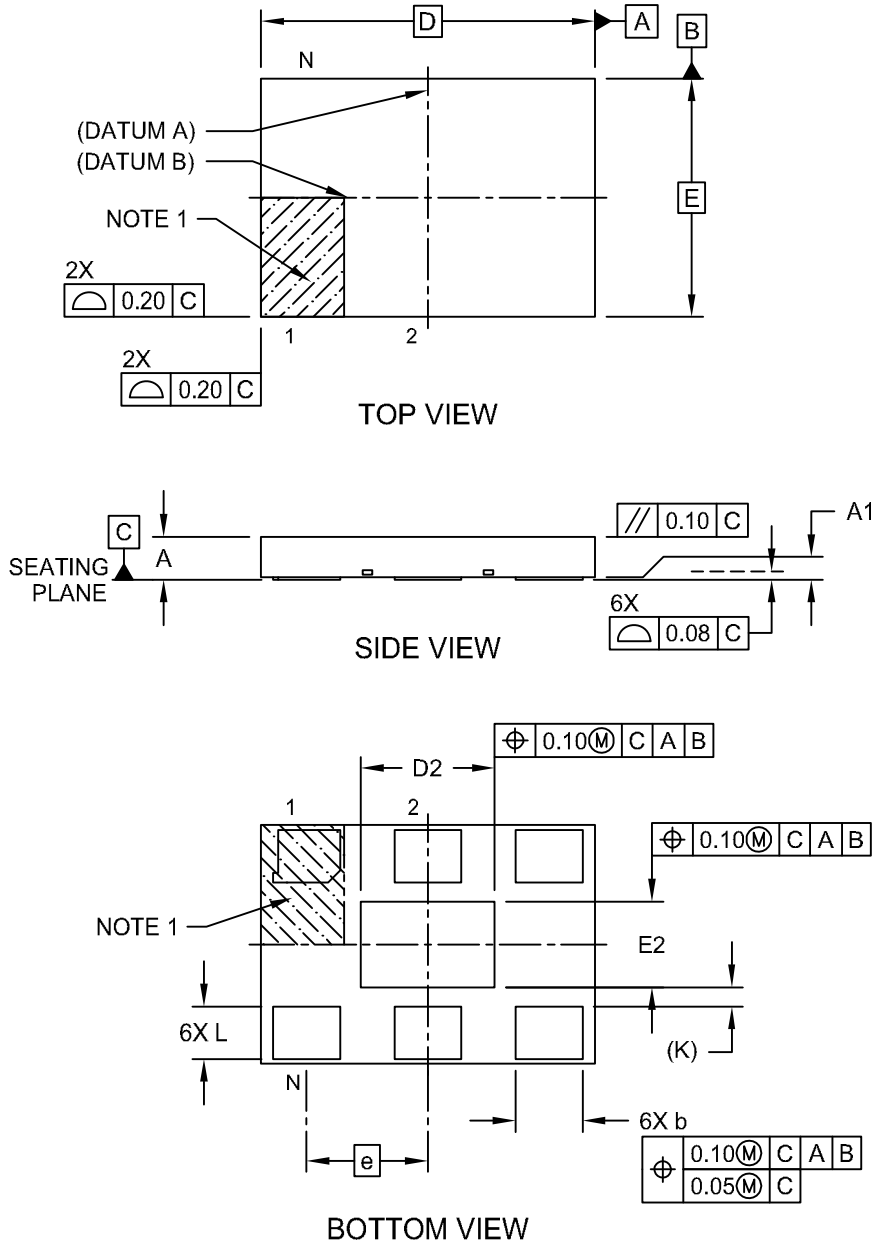

Microchip Technology Drawing C04-1010A Sheet 1 of 2

© 2017-2018 Microchip Technology Inc.

6-Lead Very Thin Plastic Quad Flat, No Lead Package (H8A) - 7x5 mm Body [VDFN] With 2.8x1.8 mm Exposed Pad

Note: For the most current package drawings, please see the Microchip Packaging Specification located at http://www.microchip.com/packaging

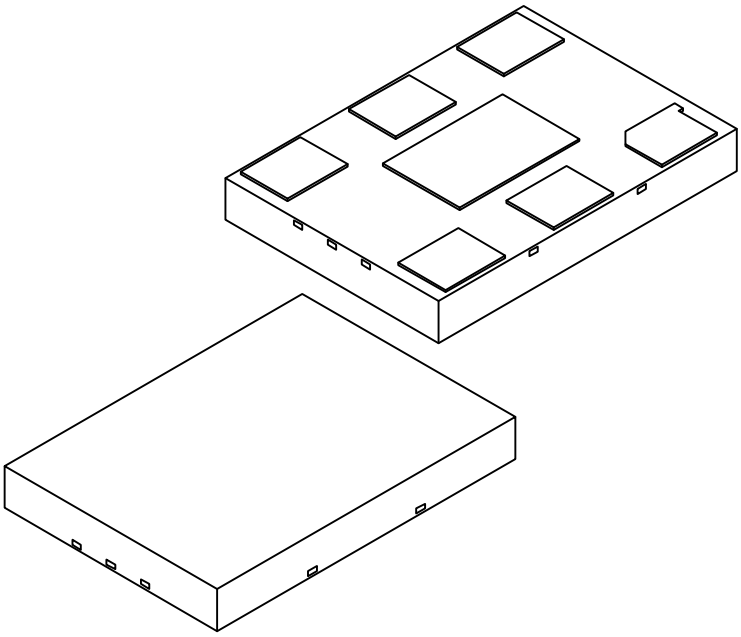

Units		MILLIMETERS		
Dimension Limits		MIN	NOM	MAX
Number of Terminals	N	6		
Pitch	e	2.54		
Overall Height	A	0.80	0.85	0.90
Standoff	A1	0.00	0.02	0.05
Overall Length	D	7.00 BSC		
Exposed Pad Length	D2	2.70	2.80	2.90
Overall Width	E	5.00 BSC		
Exposed Pad Width	E2	1.70	1.80	1.90
Terminal Width	b	1.35	1.40	1.45
Terminal Length	L	1.00	1.10	1.20
Terminal-to-Exposed-Pad	K	0.20 REF		

Notes:

1. Pin 1 visual index feature may vary, but must be located within the hatched area.
2. Package is saw singulated
3. Dimensioning and tolerancing per ASME Y14.5M

   BSC: Basic Dimension. Theoretically exact value shown without tolerances.
   REF: Reference Dimension, usually without tolerance, for information purposes only.

Microchip Technology Drawing C04-1010A Sheet 2 of 2

6-Lead CDFN 7.0 mm x 5.0 mm Package Outline and Recommended Land Pattern

TITLE
6 LEAD CDFN 7.0x5.0mm COL PACKAGE OUTLINE & RECOMMENDED LAND PATTERN

DRAWING #	CDFN75-6LD-PL-1	UNIT	MM

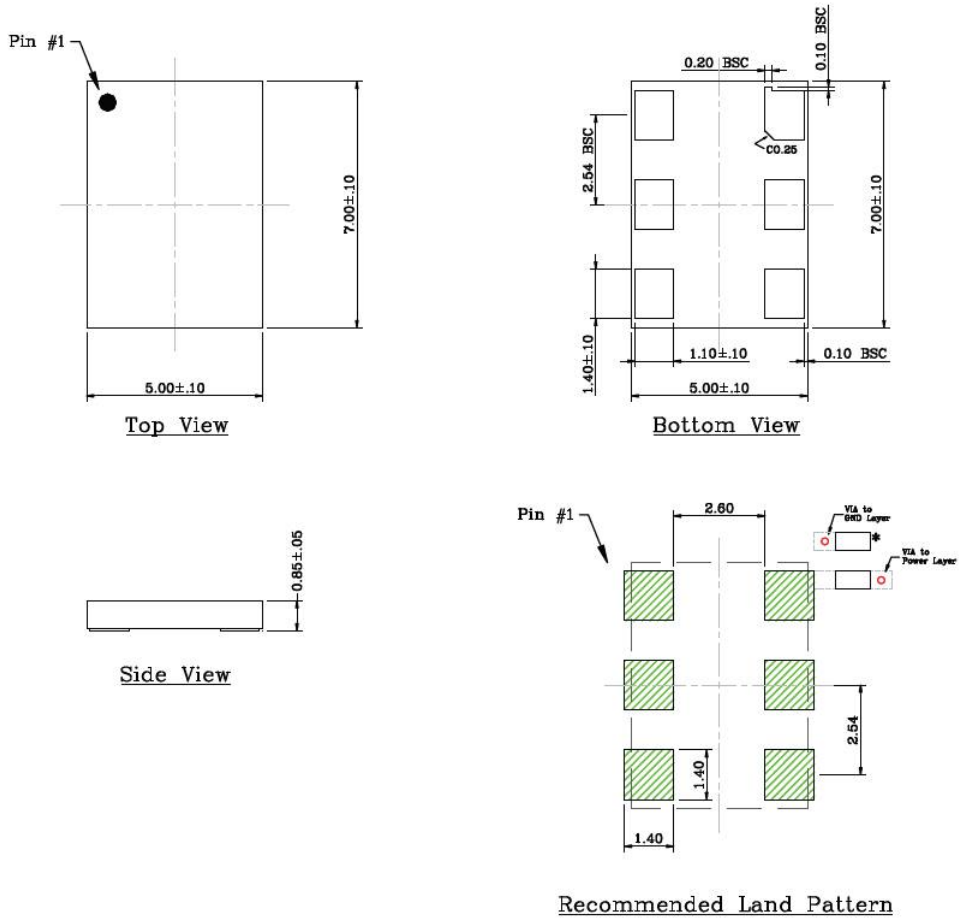

NOTE:

1. * Power Supply Decoupling Capacitor is required in Recommended Land Pattern.
2. Green shaded rectangles in Recommended Land Pattern are solder stencil opening.
3. Red circles in Recommended Land Pattern are thermal VIA.

Note: For the most current package drawings, please see the Microchip Packaging Specification located at http://www.microchip.com/packaging.

© 2017-2018 Microchip Technology Inc.

APPENDIX A: REVISION HISTORY

Revision A (March 2017)

- Converted Micrel data sheet DSC1103/23 to Microchip DS20005745A.
- Minor text changes throughout.
- Updated Package Marking Information to MCHP-standard drawings where available.

Revision B (October 2018)

- Added ±20 ppm stability references throughout document.
- Added Section 7.0, Recommended Board Layout.

PRODUCT IDENTIFICATION SYSTEM

To order or obtain information, e.g., on pricing or delivery, contact your local Microchip representative or sales office.

PART NO.	X	3	X	X	X	—	xxx.xxxx	X
Device (First 2 Digits)	Enable Modes	Device (Last Digit)	Package	Temp. Range	Stability		Frequency	Packing

Device:	DSC11x3:		Low-Jitter Precision LVDS Oscillator
Enable Modes:	0	=	Enable/Standby
	2	=	Enable/Disable
Package:	A	=	7.0 mm x 5.0 mm VDFN
	B	=	5.0 mm x 3.2 mm CDFN
	C	=	3.2 mm x 2.5 mm VDFN
	D	=	2.5 mm x 2.0 mm VDFN
	N	=	7.0 mm x 5.0 mm CDFN (no center pad)
Temperature Range:	E	=	–20°C to +70°C
	I	=	–40°C to +85°C
	L	=	–40°C to +105°C
Stability:	1	=	±50 ppm
	2	=	±25 ppm
	3	=	±20 ppm
	5	=	±10 ppm
Frequency Code:	xxx.xxxx	=	2.3 MHz to 460 MHz (user-defined)
Packing:	T	=	1,000/Reel
	(blank)	=	100/Tube

Examples:

a) DSC1103AE1-125.0000: Low-Jitter Precision LVDS Oscillator, Enable/Standby, 7x5 VDFN, –20°C to +70°C, ±50 ppm, 125 MHz, 100/Tube

b) DSC1123BI2-400.0000T: Low-Jitter Precision LVDS Oscillator, Enable/Disable, 5x3.2 CDFN, –40°C to +85°C, ±25 ppm, 400 MHz, 1,000/Reel

c) DSC1103CL5-074.2500: Low-Jitter Precision LVDS Oscillator, Enable/Standby, 3.2x2.5 VDFN, –40°C to +105°C, ±10 ppm, 74.25 MHz, 100/Tube

d) DSC1123DE1-082.5000T: Low-Jitter Precision LVDS Oscillator, Enable/Disable, 2.5x2.0 VDFN, –20°C to +70°C, ±50 ppm, 82.5 MHz, 1,000/Reel

e) DSC1103NI2-056.0000: Low-Jitter Precision LVDS Oscillator, Enable/Standby, 7x5 CDFN (no center pad), –40°C to +85°C, ±25 ppm, 56 MHz, 100/Tube

Note 1: Tape and Reel identifier only appears in the catalog part number description. This identifier is used for ordering purposes and is not printed on the device package. Check with your Microchip Sales Office for package availability with the Tape and Reel option.

Note the following details of the code protection feature on Microchip devices:

- Microchip products meet the specification contained in their particular Microchip Data Sheet.
- Microchip believes that its family of products is one of the most secure families of its kind on the market today, when used in the intended manner and under normal conditions.
- There are dishonest and possibly illegal methods used to breach the code protection feature. All of these methods, to our knowledge, require using the Microchip products in a manner outside the operating specifications contained in Microchip's Data Sheets. Most likely, the person doing so is engaged in theft of intellectual property.
- Microchip is willing to work with the customer who is concerned about the integrity of their code.
- Neither Microchip nor any other semiconductor manufacturer can guarantee the security of their code. Code protection does not mean that we are guaranteeing the product as "unbreakable."

Code protection is constantly evolving. We at Microchip are committed to continuously improving the code protection features of our products. Attempts to break Microchip's code protection feature may be a violation of the Digital Millennium Copyright Act. If such acts allow unauthorized access to your software or other copyrighted work, you may have a right to sue for relief under that Act.

Information contained in this publication regarding device applications and the like is provided only for your convenience and may be superseded by updates. It is your responsibility to ensure that your application meets with your specifications. MICROCHIP MAKES NO REPRESENTATIONS OR WARRANTIES OF ANY KIND WHETHER EXPRESS OR IMPLIED, WRITTEN OR ORAL, STATUTORY OR OTHERWISE, RELATED TO THE INFORMATION, INCLUDING BUT NOT LIMITED TO ITS CONDITION, QUALITY, PERFORMANCE, MERCHANTABILITY OR FITNESS FOR PURPOSE**.** Microchip disclaims all liability arising from this information and its use. Use of Microchip devices in life support and/or safety applications is entirely at the buyer's risk, and the buyer agrees to defend, indemnify and hold harmless Microchip from any and all damages, claims, suits, or expenses resulting from such use. No licenses are conveyed, implicitly or otherwise, under any Microchip intellectual property rights unless otherwise stated.

Microchip received ISO/TS-16949:2009 certification for its worldwide headquarters, design and wafer fabrication facilities in Chandler and Tempe, Arizona; Gresham, Oregon and design centers in California and India. The Company's quality system processes and procedures are for its PIC® MCUs and dsPIC® DSCs, KEELOQ® code hopping devices, Serial EEPROMs, microperipherals, nonvolatile memory and analog products. In addition, Microchip's quality system for the design and manufacture of development systems is ISO 9001:2000 certified.

QUALITY MANAGEMENT SYSTEM
CERTIFIED BY DNV
═ ISO/TS 16949 ═

Trademarks

The Microchip name and logo, the Microchip logo, AnyRate, AVR, AVR logo, AVR Freaks, BitCloud, chipKIT, chipKIT logo, CryptoMemory, CryptoRF, dsPIC, FlashFlex, flexPWR, Heldo, JukeBlox, KeeLoq, Kleer, LANCheck, LINK MD, maXStylus, maXTouch, MediaLB, megaAVR, MOST, MOST logo, MPLAB, OptoLyzer, PIC, picoPower, PICSTART, PIC32 logo, Prochip Designer, QTouch, SAM-BA, SpyNIC, SST, SST Logo, SuperFlash, tinyAVR, UNI/O, and XMEGA are registered trademarks of Microchip Technology Incorporated in the U.S.A. and other countries.

ClockWorks, The Embedded Control Solutions Company, EtherSynch, Hyper Speed Control, HyperLight Load, IntelliMOS, mTouch, Precision Edge, and Quiet-Wire are registered trademarks of Microchip Technology Incorporated in the U.S.A.

Adjacent Key Suppression, AKS, Analog-for-the-Digital Age, Any Capacitor, AnyIn, AnyOut, BodyCom, CodeGuard, CryptoAuthentication, CryptoAutomotive, CryptoCompanion, CryptoController, dsPICDEM, dsPICDEM.net, Dynamic Average Matching, DAM, ECAN, EtherGREEN, In-Circuit Serial Programming, ICSP, INICnet, Inter-Chip Connectivity, JitterBlocker, KleerNet, KleerNet logo, memBrain, Mindi, MiWi, motorBench, MPASM, MPF, MPLAB Certified logo, MPLIB, MPLINK, MultiTRAK, NetDetach, Omniscient Code Generation, PICDEM, PICDEM.net, PICkit, PICtail, PowerSmart, PureSilicon, QMatrix, REAL ICE, Ripple Blocker, SAM-ICE, Serial Quad I/O, SMART-I.S., SQI, SuperSwitcher, SuperSwitcher II, Total Endurance, TSHARC, USBCheck, VariSense, ViewSpan, WiperLock, Wireless DNA, and ZENA are trademarks of Microchip Technology Incorporated in the U.S.A. and other countries.

SQTP is a service mark of Microchip Technology Incorporated in the U.S.A.

Silicon Storage Technology is a registered trademark of Microchip Technology Inc. in other countries.

GestIC is a registered trademark of Microchip Technology Germany II GmbH & Co. KG, a subsidiary of Microchip Technology Inc., in other countries.

All other trademarks mentioned herein are property of their respective companies.

© 2017-2018, Microchip Technology Incorporated, All Rights Reserved.

ISBN: 978-1-5224-3790-1

Worldwide Sales and Service

AMERICAS

Corporate Office
2355 West Chandler Blvd.
Chandler, AZ 85224-6199
Tel: 480-792-7200
Fax: 480-792-7277
Technical Support:
http://www.microchip.com/support
Web Address:
www.microchip.com

Atlanta
Duluth, GA
Tel: 678-957-9614
Fax: 678-957-1455

Austin, TX
Tel: 512-257-3370

Boston
Westborough, MA
Tel: 774-760-0087
Fax: 774-760-0088

Chicago
Itasca, IL
Tel: 630-285-0071
Fax: 630-285-0075

Dallas
Addison, TX
Tel: 972-818-7423
Fax: 972-818-2924

Detroit
Novi, MI
Tel: 248-848-4000

Houston, TX
Tel: 281-894-5983

Indianapolis
Noblesville, IN
Tel: 317-773-8323
Fax: 317-773-5453
Tel: 317-536-2380

Los Angeles
Mission Viejo, CA
Tel: 949-462-9523
Fax: 949-462-9608
Tel: 951-273-7800

Raleigh, NC
Tel: 919-844-7510

New York, NY
Tel: 631-435-6000

San Jose, CA
Tel: 408-735-9110
Tel: 408-436-4270

Canada - Toronto
Tel: 905-695-1980
Fax: 905-695-2078

ASIA/PACIFIC

Australia - Sydney
Tel: 61-2-9868-6733

China - Beijing
Tel: 86-10-8569-7000

China - Chengdu
Tel: 86-28-8665-5511

China - Chongqing
Tel: 86-23-8980-9588

China - Dongguan
Tel: 86-769-8702-9880

China - Guangzhou
Tel: 86-20-8755-8029

China - Hangzhou
Tel: 86-571-8792-8115

China - Hong Kong SAR
Tel: 852-2943-5100

China - Nanjing
Tel: 86-25-8473-2460

China - Qingdao
Tel: 86-532-8502-7355

China - Shanghai
Tel: 86-21-3326-8000

China - Shenyang
Tel: 86-24-2334-2829

China - Shenzhen
Tel: 86-755-8864-2200

China - Suzhou
Tel: 86-186-6233-1526

China - Wuhan
Tel: 86-27-5980-5300

China - Xian
Tel: 86-29-8833-7252

China - Xiamen
Tel: 86-592-2388138

China - Zhuhai
Tel: 86-756-3210040

ASIA/PACIFIC

India - Bangalore
Tel: 91-80-3090-4444

India - New Delhi
Tel: 91-11-4160-8631

India - Pune
Tel: 91-20-4121-0141

Japan - Osaka
Tel: 81-6-6152-7160

Japan - Tokyo
Tel: 81-3-6880- 3770

Korea - Daegu
Tel: 82-53-744-4301

Korea - Seoul
Tel: 82-2-554-7200

Malaysia - Kuala Lumpur
Tel: 60-3-7651-7906

Malaysia - Penang
Tel: 60-4-227-8870

Philippines - Manila
Tel: 63-2-634-9065

Singapore
Tel: 65-6334-8870

Taiwan - Hsin Chu
Tel: 886-3-577-8366

Taiwan - Kaohsiung
Tel: 886-7-213-7830

Taiwan - Taipei
Tel: 886-2-2508-8600

Thailand - Bangkok
Tel: 66-2-694-1351

Vietnam - Ho Chi Minh
Tel: 84-28-5448-2100

EUROPE

Austria - Wels
Tel: 43-7242-2244-39
Fax: 43-7242-2244-393

Denmark - Copenhagen
Tel: 45-4450-2828
Fax: 45-4485-2829

Finland - Espoo
Tel: 358-9-4520-820

France - Paris
Tel: 33-1-69-53-63-20
Fax: 33-1-69-30-90-79

Germany - Garching
Tel: 49-8931-9700

Germany - Haan
Tel: 49-2129-3766400

Germany - Heilbronn
Tel: 49-7131-67-3636

Germany - Karlsruhe
Tel: 49-721-625370

Germany - Munich
Tel: 49-89-627-144-0
Fax: 49-89-627-144-44

Germany - Rosenheim
Tel: 49-8031-354-560

Israel - Ra'anana
Tel: 972-9-744-7705

Italy - Milan
Tel: 39-0331-742611
Fax: 39-0331-466781

Italy - Padova
Tel: 39-049-7625286

Netherlands - Drunen
Tel: 31-416-690399
Fax: 31-416-690340

Norway - Trondheim
Tel: 47-7288-4388

Poland - Warsaw
Tel: 48-22-3325737

Romania - Bucharest
Tel: 40-21-407-87-50

Spain - Madrid
Tel: 34-91-708-08-90
Fax: 34-91-708-08-91

Sweden - Gothenberg
Tel: 46-31-704-60-40

Sweden - Stockholm
Tel: 46-8-5090-4654

UK - Wokingham
Tel: 44-118-921-5800
Fax: 44-118-921-5820

© 2017-2018 Microchip Technology Inc.

SYST-31OHHK153 - Data Sheet - DSC1103 DSC1123 Data Sheet

Affected Catalog Part Numbers(CPN)

DSC1103AE1-100.0000T
DSC1103AE2-135.0000
DSC1103AE2-135.0000T
DSC1103AE2-212.5000
DSC1103AE2-212.5000T
DSC1103AI1-125.0000
DSC1103AI1-125.0000T
DSC1103AI1-155.5200
DSC1103AI1-155.5200T
DSC1103AI1-161.1328
DSC1103AI1-161.1328T
DSC1103AI2-025.0000T
DSC1103AI2-100.0000
DSC1103AI2-100.0000T
DSC1103AI2-125.0000
DSC1103AI2-125.0000T
DSC1103AI2-125.0031
DSC1103AI2-125.0031T
DSC1103AI2-130.0000T
DSC1103AI2-148.0000
DSC1103AI2-148.0000T
DSC1103AI2-148.5000
DSC1103AI2-148.5000T
DSC1103AI2-171.8181
DSC1103AI2-171.8181T
DSC1103AI2-200.0000
DSC1103AI2-300.0000
DSC1103AI2-300.0000T
DSC1103AI5-120.0000
DSC1103AI5-120.0000T
DSC1103AI5-125.0000
DSC1103AI5-156.2500
DSC1103AI5-156.2500T
DSC1103AI5-250.0000
DSC1103AL1-100.0000
DSC1103AL1-100.0000T
DSC1103AL1-287.0000
DSC1103AL1-287.0000T
DSC1103AL2-125.0031
DSC1103AL2-125.0031T
DSC1103AL2-147.4560
DSC1103AL2-147.4560T

DSC1103AM1-287.0000
DSC1103AM1-287.0000T
DSC1103BE1-150.0000
DSC1103BE1-150.0000T
DSC1103BE5-156.2500
DSC1103BE5-156.2500T
DSC1103BI2-050.0000
DSC1103BI2-050.0000T
DSC1103BI2-100.0000
DSC1103BI2-100.0000T
DSC1103BI2-125.0000
DSC1103BI2-125.0000T
DSC1103BI2-135.0000
DSC1103BI2-135.0000T
DSC1103BI2-148.5000
DSC1103BI2-148.5000T
DSC1103BI2-150.0000
DSC1103BI2-200.0000
DSC1103BI2-200.0000T
DSC1103BL2-125.0000
DSC1103BL2-125.0000T
DSC1103BL2-200.0000
DSC1103BL2-200.0000T
DSC1103BL5-062.5000
DSC1103BL5-062.5000T
DSC1103CE1-125.0000
DSC1103CE1-125.0000T
DSC1103CE1-156.2500
DSC1103CE1-156.2500T
DSC1103CE1-200.0000
DSC1103CE1-200.0000T
DSC1103CE1-233.3000
DSC1103CE1-233.3000T
DSC1103CE1-266.7000
DSC1103CE1-266.7000T
DSC1103CE2-135.0000
DSC1103CE2-135.0000T
DSC1103CE2-156.2500
DSC1103CE2-156.2500T
DSC1103CE2-200.0000
DSC1103CE2-200.0000T
DSC1103CE5-045.0000
DSC1103CE5-045.0000T
DSC1103CE5-100.0000
DSC1103CE5-100.0000T
DSC1103CE5-150.0000
DSC1103CE5-156.2500

DSC1103CI1-026.0000
DSC1103CI1-026.0000T
DSC1103CI1-027.0000
DSC1103CI1-027.0000T
DSC1103CI1-075.0000
DSC1103CI1-100.0000
DSC1103CI1-122.8800
DSC1103CI1-122.8800T
DSC1103CI1-125.0000
DSC1103CI1-125.0000T
DSC1103CI1-156.2500
DSC1103CI1-156.2500T
DSC1103CI1-200.0000
DSC1103CI1-200.0000T
DSC1103CI2-024.0000
DSC1103CI2-024.0000T
DSC1103CI2-025.0000
DSC1103CI2-025.0000T
DSC1103CI2-050.0000
DSC1103CI2-050.0000T
DSC1103CI2-052.0000
DSC1103CI2-052.0000T
DSC1103CI2-074.2500
DSC1103CI2-074.2500T
DSC1103CI2-100.0000
DSC1103CI2-100.0000T
DSC1103CI2-103.1250
DSC1103CI2-103.1250T
DSC1103CI2-106.2500
DSC1103CI2-106.2500T
DSC1103CI2-125.0000
DSC1103CI2-125.0000T
DSC1103CI2-148.3500
DSC1103CI2-148.3500T
DSC1103CI2-148.5000
DSC1103CI2-148.5000T
DSC1103CI2-156.2500
DSC1103CI2-200.0000
DSC1103CI2-200.0000T
DSC1103CI2-250.0000
DSC1103CI2-250.0000T
DSC1103CI2-300.0000
DSC1103CI2-300.0000T
DSC1103CI3-100.0000
DSC1103CI3-100.0000T
DSC1103CI3-125.0000
DSC1103CI3-125.0000T

DSC1103CI3-200.0000
DSC1103CI3-200.0000T
DSC1103CI3-250.0000
DSC1103CI3-250.0000T
DSC1103CI5-016.0000
DSC1103CI5-016.0000T
DSC1103CI5-025.0000
DSC1103CI5-025.0000T
DSC1103CI5-026.0000
DSC1103CI5-026.0000T
DSC1103CI5-027.0000
DSC1103CI5-027.0000T
DSC1103CI5-033.3330
DSC1103CI5-033.3330T
DSC1103CI5-045.0000
DSC1103CI5-045.0000T
DSC1103CI5-050.0000
DSC1103CI5-050.0000T
DSC1103CI5-075.0000
DSC1103CI5-075.0300
DSC1103CI5-075.0300T
DSC1103CI5-100.0000
DSC1103CI5-100.0000T
DSC1103CI5-103.1250
DSC1103CI5-103.1250T
DSC1103CI5-106.2500
DSC1103CI5-106.2500T
DSC1103CI5-114.0000
DSC1103CI5-125.0000
DSC1103CI5-125.0000T
DSC1103CI5-140.0000
DSC1103CI5-148.5000
DSC1103CI5-150.0000
DSC1103CI5-150.0000T
DSC1103CI5-156.2500
DSC1103CI5-156.2500T
DSC1103CI5-180.0000
DSC1103CI5-180.0000T
DSC1103CI5-200.0000
DSC1103CI5-200.0000T
DSC1103CI5-224.8200
DSC1103CI5-224.8200T
DSC1103CI5-233.2090
DSC1103CI5-233.2090T
DSC1103CI5-233.3333
DSC1103CI5-233.3333T
DSC1103CI5-250.0000

DSC1103CI5-250.0000T
DSC1103CI5-300.0000
DSC1103CI5-300.0000T
DSC1103CL2-052.0000
DSC1103CL2-052.0000T
DSC1103CL2-125.0000
DSC1103CL2-125.0000T
DSC1103CL2-233.3333
DSC1103CL2-233.3333T
DSC1103CL2-333.3333
DSC1103CL2-333.3333T
DSC1103CL5-033.3330
DSC1103CL5-033.3330T
DSC1103CL5-075.0300
DSC1103CL5-075.0300T
DSC1103CL5-100.0000
DSC1103CL5-100.0000T
DSC1103CL5-106.2500
DSC1103CL5-106.2500T
DSC1103CL5-150.0000
DSC1103CL5-150.0000T
DSC1103DI2-019.2000
DSC1103DI2-048.0000
DSC1103DI2-048.0000T
DSC1103DI2-100.0000
DSC1103DI2-100.0000T
DSC1103DI2-108.0000
DSC1103DI2-108.0000T
DSC1103DI2-125.0000
DSC1103DI2-125.0000T
DSC1103DI2-135.0000
DSC1103DI2-135.0000T
DSC1103DI2-148.3500
DSC1103DI2-148.3500T
DSC1103DI2-148.5000
DSC1103DI2-148.5000T
DSC1103DI2-200.0000
DSC1103DI2-200.0000T
DSC1103DI2-312.5000
DSC1103DI2-400.0000
DSC1103DI2-400.0000T
DSC1103DI5-010.0000
DSC1103DI5-022.0000
DSC1103DI5-032.0000
DSC1103DI5-074.2500
DSC1103DI5-074.2500T
DSC1103DI5-100.0000

DSC1103DI5-100.0000T
DSC1103DI5-125.0060
DSC1103DI5-125.0060T
DSC1103DI5-171.8181
DSC1103DI5-171.8181T
DSC1103DI5-200.0000
DSC1103DI5-200.0000T
DSC1103DI5-360.0000
DSC1103DI5-360.0000T
DSC1103DL1-025.0013
DSC1103DL1-025.0013T
DSC1103DL2-025.0012
DSC1103DL2-025.0012T
DSC1103DL2-098.3040
DSC1103DL2-098.3040T
DSC1103DL2-100.0000
DSC1103DL2-100.0000T
DSC1103DL2-122.8800
DSC1103DL2-122.8800T
DSC1103DL2-147.4560
DSC1103DL2-147.4560T
DSC1103DL2-156.2500
DSC1103DL2-156.2500T
DSC1103DL5-125.0000
DSC1103DL5-125.0000T
DSC1103DL5-156.2500
DSC1103DL5-156.2500T
DSC1103NE1-114.2850
DSC1103NE1-114.2850T
DSC1103NE1-125.0000
DSC1103NI1-135.0000
DSC1103NI1-135.0000T
DSC1103NI2-125.0000
DSC1103NI2-125.0000T
DSC1103NI2-148.5000
DSC1103NI2-148.5000T
DSC1103NI2-156.2500
DSC1103NI2-156.2500T
DSC1103NI2-400.0000
DSC1103NL2-098.3040
DSC1103NL2-098.3040T
DSC1103NL2-147.4560
DSC1103NL2-147.4560T
DSC1123AE1-100.0000
DSC1123AE1-100.0000T
DSC1123AE1-125.0000
DSC1123AE1-125.0000T

DSC1123AE1-148.3500
DSC1123AE1-148.3500T
DSC1123AE1-148.5000
DSC1123AE1-148.5000T
DSC1123AE1-150.0000T
DSC1123AE1-200.0000
DSC1123AE2-040.0000
DSC1123AE2-040.0000T
DSC1123AE2-100.0000
DSC1123AE2-148.3516
DSC1123AE2-148.3516T
DSC1123AE2-200.0000
DSC1123AE2-300.0000
DSC1123AE5-074.1758
DSC1123AE5-074.1758T
DSC1123AE5-148.3516
DSC1123AE5-148.3516T
DSC1123AE5-148.5000
DSC1123AE5-148.5000T
DSC1123AI1-075.0000
DSC1123AI1-100.0000
DSC1123AI1-100.0000T
DSC1123AI1-120.0000T
DSC1123AI1-125.0000
DSC1123AI1-125.0000T
DSC1123AI1-150.0000
DSC1123AI1-150.0000T
DSC1123AI1-155.5200
DSC1123AI1-155.5200T
DSC1123AI1-156.2500T
DSC1123AI1-161.1300
DSC1123AI1-161.1300T
DSC1123AI1-161.1328
DSC1123AI1-161.1328T
DSC1123AI1-200.0000
DSC1123AI1-200.0000T
DSC1123AI2-025.0000
DSC1123AI2-025.0000T
DSC1123AI2-027.0000
DSC1123AI2-027.0000T
DSC1123AI2-040.0000
DSC1123AI2-040.0000T
DSC1123AI2-050.0000
DSC1123AI2-050.0000T
DSC1123AI2-050.0023
DSC1123AI2-050.0023T
DSC1123AI2-062.5000

DSC1123AI2-062.5000T
DSC1123AI2-100.0000
DSC1123AI2-100.0000T
DSC1123AI2-120.0000
DSC1123AI2-125.0000
DSC1123AI2-125.0000T
DSC1123AI2-135.0000
DSC1123AI2-135.0000T
DSC1123AI2-140.0000
DSC1123AI2-140.0000T
DSC1123AI2-148.5000
DSC1123AI2-148.5000T
DSC1123AI2-150.0000
DSC1123AI2-156.2500
DSC1123AI2-156.2500T
DSC1123AI2-156.2570
DSC1123AI2-156.2570T
DSC1123AI2-166.6666
DSC1123AI2-166.6666T
DSC1123AI2-200.0000
DSC1123AI2-200.0000T
DSC1123AI5-019.2000
DSC1123AI5-019.2000T
DSC1123AI5-027.0000
DSC1123AI5-027.0000T
DSC1123AI5-100.0000
DSC1123AI5-100.0000T
DSC1123AI5-116.0000
DSC1123AI5-116.0000T
DSC1123AI5-125.0000
DSC1123AI5-125.0000T
DSC1123AI5-133.3300
DSC1123AI5-133.3300T
DSC1123AI5-135.0000
DSC1123AI5-148.3500
DSC1123AI5-148.5000
DSC1123AI5-148.5000T
DSC1123AI5-150.0000
DSC1123AI5-150.0000T
DSC1123AI5-155.5200
DSC1123AI5-156.2500
DSC1123AI5-175.0000
DSC1123AI5-175.0000T
DSC1123AI5-185.6250
DSC1123AI5-185.6250T
DSC1123AI5-200.0000
DSC1123AI5-200.0000T

DSC1123AI5-270.0000
DSC1123AI5-270.0000T
DSC1123AI5-322.2656
DSC1123AI5-322.2656T
DSC1123AL1-148.5000
DSC1123AL1-148.5000T
DSC1123AL1-150.0000
DSC1123AL1-150.0000T
DSC1123AL2-025.0000
DSC1123AL2-050.0000
DSC1123AL2-100.0000
DSC1123AL2-100.0000T
DSC1123AL2-125.0000
DSC1123AL2-125.0000T
DSC1123AL5-100.0000
DSC1123AL5-100.0000T
DSC1123AL5-125.0000
DSC1123AL5-125.0000T
DSC1123AL5-148.5000
DSC1123AL5-148.5000T
DSC1123AL5-156.2500
DSC1123AL5-156.2500T
DSC1123AM1-287.0000
DSC1123AM1-287.0000T
DSC1123BE1-050.0000
DSC1123BE1-050.0000T
DSC1123BE1-100.0000
DSC1123BE1-100.0000T
DSC1123BE2-050.0000
DSC1123BE5-156.2500
DSC1123BI1-100.0000
DSC1123BI1-100.0000T
DSC1123BI1-125.0000
DSC1123BI1-125.0000T
DSC1123BI1-150.0000T
DSC1123BI1-156.2500
DSC1123BI1-156.2500T
DSC1123BI1-200.0000
DSC1123BI1-200.0000T
DSC1123BI2-025.0000
DSC1123BI2-025.0000T
DSC1123BI2-034.0000
DSC1123BI2-034.0000T
DSC1123BI2-050.0000
DSC1123BI2-050.0013
DSC1123BI2-050.0013T
DSC1123BI2-068.0000

DSC1123BI2-068.0000T
DSC1123BI2-100.0000
DSC1123BI2-100.0000T
DSC1123BI2-125.0000
DSC1123BI2-125.0000T
DSC1123BI2-125.0037
DSC1123BI2-125.0037T
DSC1123BI2-148.5000
DSC1123BI2-148.5000T
DSC1123BI2-155.5200
DSC1123BI2-155.5200T
DSC1123BI2-156.0000
DSC1123BI2-156.0000T
DSC1123BI2-156.2500
DSC1123BI2-156.2500T
DSC1123BI2-156.2570
DSC1123BI2-156.2570T
DSC1123BI2-180.0000
DSC1123BI2-180.0000T
DSC1123BI2-200.0000
DSC1123BI2-200.0000T
DSC1123BI2-206.0000
DSC1123BI2-206.0000T
DSC1123BI2-210.0000
DSC1123BI2-210.0000T
DSC1123BI2-212.5000T
DSC1123BI2-270.0000
DSC1123BI2-270.0000T
DSC1123BI2-300.0000
DSC1123BI2-300.0000T
DSC1123BI3-050.0000
DSC1123BI3-050.0000T
DSC1123BI5-010.0000
DSC1123BI5-010.0000T
DSC1123BI5-100.0000
DSC1123BI5-100.0000T
DSC1123BI5-125.0000
DSC1123BI5-125.0000T
DSC1123BI5-148.3516
DSC1123BI5-148.3516T
DSC1123BI5-148.5000
DSC1123BI5-148.5000T
DSC1123BI5-155.5200
DSC1123BI5-155.5200T
DSC1123BI5-156.2500
DSC1123BI5-156.2500T
DSC1123BI5-200.0000

DSC1123BI5-200.0000T
DSC1123BL1-100.0000
DSC1123BL1-100.0000T
DSC1123BL2-125.0000
DSC1123BL2-125.0000T
DSC1123BL5-100.0000
DSC1123BL5-100.0000T
DSC1123BL5-125.0000
DSC1123BL5-125.0000T
DSC1123BL5-156.2500
DSC1123BL5-156.2500T
DSC1123BL5-200.0000
DSC1123BL5-200.0000T
DSC1123BM1-166.0000
DSC1123BM1-166.0000T
DSC1123BM1-287.0000
DSC1123BM1-287.0000T
DSC1123CE1-050.0000
DSC1123CE1-125.0000
DSC1123CE1-125.0000T
DSC1123CE1-150.0000
DSC1123CE1-150.0000T
DSC1123CE1-156.2500
DSC1123CE1-156.2500T
DSC1123CE2-062.0000
DSC1123CE2-100.0000
DSC1123CE2-100.0000T
DSC1123CE2-135.0000T
DSC1123CE2-148.3516
DSC1123CE2-148.5000
DSC1123CE2-250.0000
DSC1123CE2-250.0000T
DSC1123CE2-312.5000
DSC1123CE2-312.5000T
DSC1123CE5-100.0000
DSC1123CE5-100.0000T
DSC1123CE5-150.0000
DSC1123CE5-150.0000T
DSC1123CE5-156.2500
DSC1123CE5-156.2500T
DSC1123CI1-010.0000
DSC1123CI1-022.8800
DSC1123CI1-022.8800T
DSC1123CI1-027.0000
DSC1123CI1-027.0000T
DSC1123CI1-050.0000
DSC1123CI1-050.0000T

DSC1123CI1-100.0000
DSC1123CI1-100.0000T
DSC1123CI1-122.8800
DSC1123CI1-122.8800T
DSC1123CI1-125.0000
DSC1123CI1-125.0000T
DSC1123CI1-150.0000T
DSC1123CI1-156.2500
DSC1123CI1-156.2500T
DSC1123CI1-200.0000
DSC1123CI1-200.0000T
DSC1123CI2-020.0000
DSC1123CI2-020.0000T
DSC1123CI2-025.0000
DSC1123CI2-035.0000
DSC1123CI2-035.0000T
DSC1123CI2-050.0000
DSC1123CI2-050.0000T
DSC1123CI2-060.0000
DSC1123CI2-060.0000T
DSC1123CI2-062.5000
DSC1123CI2-062.5000T
DSC1123CI2-072.0000
DSC1123CI2-072.0000T
DSC1123CI2-085.0000
DSC1123CI2-086.0000
DSC1123CI2-086.0000T
DSC1123CI2-100.0000
DSC1123CI2-100.0000T
DSC1123CI2-125.0000
DSC1123CI2-125.0000T
DSC1123CI2-125.0000TV04
DSC1123CI2-125.0987
DSC1123CI2-125.0987T
DSC1123CI2-144.0000
DSC1123CI2-144.0000T
DSC1123CI2-148.5000
DSC1123CI2-148.5000T
DSC1123CI2-150.0000
DSC1123CI2-150.0000T
DSC1123CI2-156.2500
DSC1123CI2-156.2500T
DSC1123CI2-160.0000
DSC1123CI2-160.0000T
DSC1123CI2-175.0000
DSC1123CI2-175.0000T
DSC1123CI2-180.0000

DSC1123CI2-180.0000T
DSC1123CI2-200.0000
DSC1123CI2-200.0000T
DSC1123CI2-212.5000
DSC1123CI2-212.5000T
DSC1123CI2-265.5250
DSC1123CI2-265.5250T
DSC1123CI2-266.5000
DSC1123CI2-266.5000T
DSC1123CI2-266.5250
DSC1123CI2-266.5250T
DSC1123CI2-270.0000
DSC1123CI2-270.0000T
DSC1123CI2-300.0000
DSC1123CI2-300.0000T
DSC1123CI2-312.5000
DSC1123CI2-312.5000T
DSC1123CI2-322.2650
DSC1123CI2-322.2650T
DSC1123CI2-333.3300
DSC1123CI2-333.3300T
DSC1123CI2-333.3333
DSC1123CI2-333.3333T
DSC1123CI2-432.0000
DSC1123CI3-148.5000
DSC1123CI3-148.5000T
DSC1123CI5-026.5625
DSC1123CI5-032.0000
DSC1123CI5-032.0000T
DSC1123CI5-034.0000
DSC1123CI5-040.0000
DSC1123CI5-040.0000T
DSC1123CI5-096.0000
DSC1123CI5-096.0000T
DSC1123CI5-100.0000
DSC1123CI5-100.0000T
DSC1123CI5-125.0000
DSC1123CI5-125.0000T
DSC1123CI5-150.0000
DSC1123CI5-150.0000T
DSC1123CI5-156.2500
DSC1123CI5-156.2500T
DSC1123CI5-233.2090
DSC1123CI5-233.2090T
DSC1123CI5-409.3750
DSC1123CL1-025.0000
DSC1123CL1-025.0000T

DSC1123CL1-150.0000
DSC1123CL1-287.0000
DSC1123CL1-287.0000T
DSC1123CL1-400.0000
DSC1123CL1-400.0000T
DSC1123CL2-125.0000
DSC1123CL2-200.0000
DSC1123CL2-200.0000T
DSC1123CL2-333.3333
DSC1123CL2-333.3333T
DSC1123CL3-040.0000
DSC1123CL3-040.0000T
DSC1123CL5-025.0000
DSC1123CL5-025.0000T
DSC1123CL5-050.0000
DSC1123CL5-050.0000T
DSC1123CL5-100.0000
DSC1123CL5-100.0000T
DSC1123CL5-322.2656
DSC1123CL5-322.2656T
DSC1123CL5-433.0000
DSC1123CL5-433.0000T
DSC1123CM1-375.0000
DSC1123CM1-375.0000T
DSC1123DE1-131.0720
DSC1123DE1-148.3516
DSC1123DE1-148.3516T
DSC1123DE2-399.6800
DSC1123DE2-399.6800T
DSC1123DE2-400.0000
DSC1123DE2-400.0000T
DSC1123DE5-200.0000
DSC1123DI1-125.0000
DSC1123DI1-125.0000T
DSC1123DI2-025.0000
DSC1123DI2-025.0000B
DSC1123DI2-025.0000T
DSC1123DI2-050.0000
DSC1123DI2-050.0000T
DSC1123DI2-086.0000
DSC1123DI2-086.0000T
DSC1123DI2-100.0000
DSC1123DI2-100.0000B
DSC1123DI2-100.0000T
DSC1123DI2-106.2500
DSC1123DI2-125.0000
DSC1123DI2-125.0000B

DSC1123DI2-125.0000T
DSC1123DI2-148.4258
DSC1123DI2-148.4258T
DSC1123DI2-148.5000
DSC1123DI2-148.5000B
DSC1123DI2-148.5000T
DSC1123DI2-156.2500
DSC1123DI2-156.2500T
DSC1123DI2-200.0000
DSC1123DI2-200.0000T
DSC1123DI2-312.0000
DSC1123DI2-312.0000T
DSC1123DI2-312.2000
DSC1123DI2-312.2000T
DSC1123DI2-315.0000
DSC1123DI2-315.0000T
DSC1123DI5-100.0000
DSC1123DI5-125.0000
DSC1123DI5-148.4258
DSC1123DI5-148.4258T
DSC1123DI5-156.2500
DSC1123DI5-156.2500T
DSC1123DI5-200.0000
DSC1123DL1-125.0000
DSC1123DL1-125.0000T
DSC1123DL2-100.0000
DSC1123DL2-100.0000T
DSC1123DL2-125.0000
DSC1123DL2-125.0000T
DSC1123DL2-250.0000
DSC1123DL2-250.0000T
DSC1123DL5-100.0000
DSC1123DL5-100.0000T
DSC1123DL5-125.0000
DSC1123DL5-125.0000T
DSC1123DL5-135.0000
DSC1123DL5-135.0000T
DSC1123DL5-136.5000
DSC1123DL5-136.5000T
DSC1123DL5-150.0000
DSC1123DL5-150.0000T
DSC1123DL5-156.2500T
DSC1123DL5-176.5000
DSC1123DL5-176.5000T
DSC1123DL5-200.0000
DSC1123DL5-200.0000T
DSC1123DL5-206.5000

DSC1123DL5-206.5000T
DSC1123DL5-212.5000
DSC1123DL5-212.5000T
DSC1123NE1-100.0000
DSC1123NE1-100.0000T
DSC1123NE2-125.0000
DSC1123NE2-125.0000T
DSC1123NE2-156.2500
DSC1123NE2-156.2500T
DSC1123NI1-100.0000
DSC1123NI1-100.0000T
DSC1123NI1-125.0000
DSC1123NI1-156.2500
DSC1123NI1-156.2500T
DSC1123NI2-125.0000
DSC1123NI2-125.0000T
DSC1123NI2-150.0000
DSC1123NI2-200.0000
DSC1123NI2-200.0000T
DSC1123NI2-312.5000
DSC1123NI2-312.5000T
DSC1123NI3-050.0015
DSC1123NI3-050.0015T
DSC1123NI5-100.0000
DSC1123NI5-100.0000T
DSC1123NI5-125.0000
DSC1123NI5-125.0000T
DSC1123NI5-156.2500
DSC1123NI5-156.2500T
DSC1123NI5-322.2656
DSC1123NI5-322.2656T
DSC1123NL2-100.0000
DSC1123NL2-100.0000T
DSC1123NL5-100.0000
DSC1123NL5-100.0000T
DSC1123NL5-125.0000
DSC1123NL5-125.0000T