ABRACON LLC
The Power of Linking Together

ABRACON, LLC
ENGINEERING/PROCESS CHANGE NOTIFICATION FORM

ABRACON ENGINEERING ORIGINATOR:

Brooke Cushman – Associate Engineer

NOTIFICATION DATE:

10/26/2018

IMPLEMENTATION DATE: 10/26/2018

SCD/DRAWING AFFECTED:
AB Series
HC49/U Crystal
REV: **U**

NEW REV: **V**

EFFECTIVITY DATE: 10/26/2018

ECO# 3363

REASON FOR CHANGE:
Packaging option removed from offering due to decrease in market demand.

DETAILS OF SPECIFICATION CHANGE:

Part Number Builder:

- ***"Value Added" Section of part number builder:***
  - **Option "V" (Vinyl Sleeve) has been removed from offering**

APPLICATION INFORMATION

Safety	Non Safety	Application:
(Check one)		
	O	

DISPOSITION OFCURRENT STOCK
☐ Scrap
☐ Transfer to: _____
√ Use as is
☐ Return to vendor

ABRACON INTERNAL APPROVAL:

APPROVAL (PRES) _____**Mike Calabria**_____ _____ DATE **10/26/2018**

GLOBAL QUOTING/PRICING MGR _**Hector Lopex**_____ DATE **10/26/2018**

ENGINEERING VP _____**Syed Raza**_____ DATE **10/26/2018**

PURCHASING MGR _____**Ying Huang**_____ DATE **10/26/2018**

SALES VP _____**Mike White**_____DATE **10/26/2018**

QUALITY & PROCESS IMPROVEMENT MGR: **Reuben Quintanilla**___DATE **10/26/2018**

CUSTOMER APPROVAL (If Applicable)

ENGINEERING: NAME: _____ TITLE:_____ DATE:_____

BUYER/PURCHASING: NAME:_____ TITLE:_____ DATE:_____

HC49/U CRYSTAL

AB

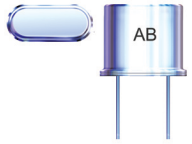

11.5 x 5.0 x 13.46mm

RoHS/RoHS II Compliant

Moisture Sensitivity Level (MSL) – This product is not Moisture Sensitive - MSL = 1

FEATURES:

- High precision availability
- Resistance welded
- Ideal for large pullability application
- Wide frequency range

APPLICATIONS:

- CPU, Memory
- Computer, printer
- Data communication (1MHz)
- Data input - output machine (1MHz)

STANDARD SPECIFICATIONS:

Parameters	Minimum	Typical	Maximum	Units	Notes
Frequency Range	1.8432		160.000	MHz	
Operation Mode	Fundamental				1.8432MHz – 24.000MHz
	3rd Overtone				24.01MHz – 66.00MHz
	5th Overtone				66.01MHz – 122.00MHz
	7th Overtone				122.01MHz – 160.00MHz
Operating Temperature	0		+70	ºC	See options
Storage Temperature	-55		+125	ºC	
Frequency Tolerance @+25℃	-50		+50	ppm	See options
Frequency Stability over the operating temperature (ref. to +25℃)	-100		+100	ppm	See options
Equivalent series resistance (R1)	See table 1 below			Ω	
Shunt capacitance (C0)			7	pF	
Load capacitance (CL)		18		pF	See options
Drive Level		100	1000	µW	
Aging@25℃±3℃			±5	ppm	First year
Insulation Resistance	500			M Ω	@100Vdc±15V
Drive level dependency (DLD), minimum 7 points tested: from 1µW to 500µW.	Change in frequency (Maximum - Minimum) over DLD range < ±10ppm; Change in ESR (Maximum - Minimum) over DLD range < 25% of Max ESR value; Maximum ESR over DLD range < Max ESR value.				

Table 1

FREQUENCY (MHz)	Operation Mode	ESR (Ω) max
1.8432-1.999	HC49/U Fundamental	750
2.000-2.399		550
2.400-2.999		350
3.000-3.699		200
3.700-4.199		100
4.200-4.899		70
4.900-5.999		50
6.000-7.999		40
8.000-9.999		35
10.000-12.499		30
12.50-50.00		25
24.00-66.00	HC49/U (3rd OT)	40
66.01-122.00	HC49/U (5th OT)	80
122.01-160.00	HC49/U (7th OT)	120

ABRACON LLC
5101 Hidden Creek Ln Spicewood TX 78669
Phone: 512-371-6159 | Fax: 512-351-8858
For terms and conditions of sales, please visit:
www.abracon.com

REVISED: 10.29.2018

ABRACON IS ISO9001-2015 CERTIFIED

HC49/U CRYSTAL

AB

RoHS/RoHS II Compliant

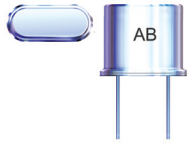

11.5 x 5.0 x 13.46mm

OPTIONS AND PART IDENTIFICATION:

(Left blank if standard)

AB - [ ] MHz - [ ] - [ ] - [ ][ ][ ] - [ ] - [ ] - [ ] - [ ]

Frequency in MHz
Please specify the frequency in xx.xxxx MHz.
e.g. 14.3181MHz

Load Capacitance (pF)
Please specify CL (Minimum 10 pF) in pF or S for series

Custom ESR if other than standard
R□
□: Specify a value in Ω
(e.g.: R40)

Operating Temp.

A: -10°C ~ +60° C
B: -20°C ~ +70° C
C: -30°C ~ +70° C
N: -30°C ~ +85° C
D: -40°C ~ +85° C

Freq. Tolerance

1: ± 10 ppm
7: ± 15 ppm
2: ± 20 ppm
3: ± 25 ppm
4: ± 30 ppm

Freq. Stability

Options for AT-Cut only*
U**: ± 10ppm
G: ± 15 ppm
X: ± 20 ppm
W: ± 25 ppm
Y: ± 30 ppm
H: ± 35 ppm
Z: ± 50 ppm

Operation Mode

F	Fund. AT > 24MHz
FB	Fund. BT>24MHz
O	3rd OT>66MHz

Value Added

I	Insulator Tab
QXX	Trimmed leads See Table 2
MJ	Metal jacket

Quality Factor*

QXXXk	Minimum Value

Packaging

Blank: Bulk (std.)
T: Tape & Reel (For MJ option only)

NOTE:
*:Frequency Stability ±100 ppm max at -10 to +60C only for BT cut.
**: -10 to +60C only.
***: Quality factor must be accompanied by a k value

Table 2

CODES	TRIMMED L in(mm)
Q45	0.45 (11.43)
Q40	0.40 (10.16)
Q35	0.35 (8.89)
Q30	0.30 (7.62)
Q25	0.25 (6.35)
Q20	0.20 (5.08)
Q15	0.15 (3.81)
Q10	0.10 (2.54)
Q115	0.115 (2.92)

NOTE: Use appropriate code numbers for other trimmed lengths not listed.
(e.g. Q14 for 0.14 inch (3.55 mm))

HC49/U CRYSTAL

AB

RoHS/RoHS II Compliant

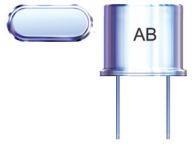

11.5 x 5.0 x 13.46mm

OUTLINE DRAWING:

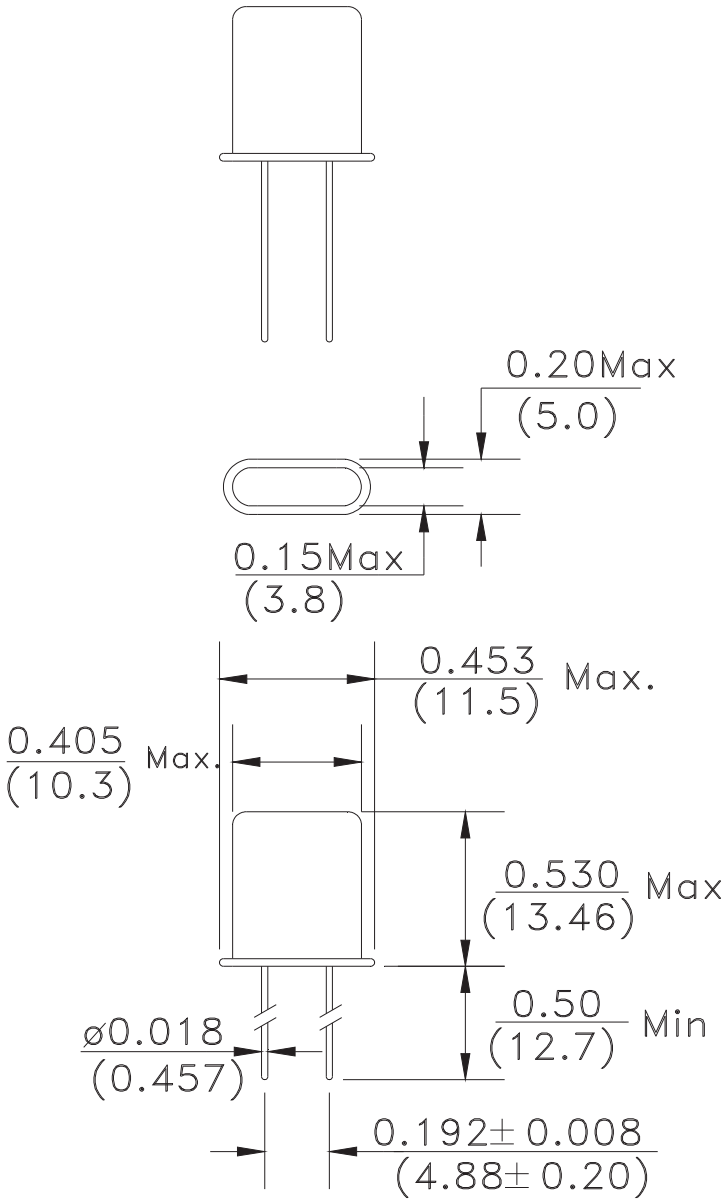

Insulator Tab
For Option I

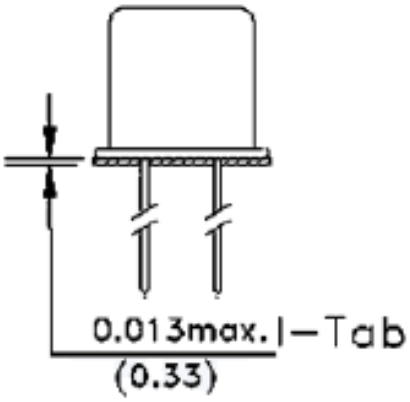

Dimensions: inch (mm)

ABRACON LLC

5101 Hidden Creek Ln Spicewood TX 78669
Phone: 512-371-6159 | Fax: 512-351-8858
For terms and conditions of sales, please visit:
www.abracon.com

REVISED: 10.29.2018

ABRACON IS ISO9001-2015 CERTIFIED

HC49/U CRYSTAL

AB

Pb RoHS/RoHS II Compliant

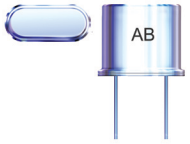

11.5 x 5.0 x 13.46mm

OUTLINE DIMENSION CONTD...

Metal Jacket Formed Leads

For Option MJ

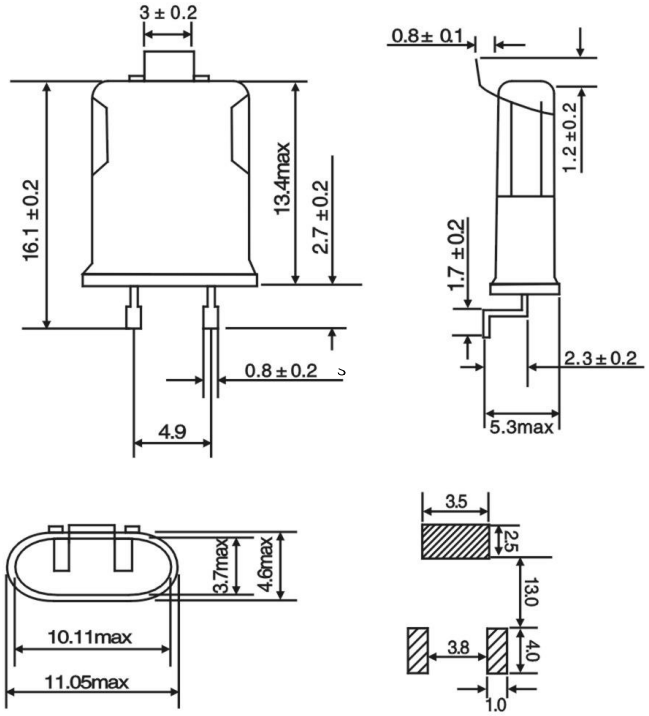

Dimensions: mm

TAPE & REEL:

T: 1,000 pcs/reel

Tape and reel packaging applies only to MJ (metal jacket) option

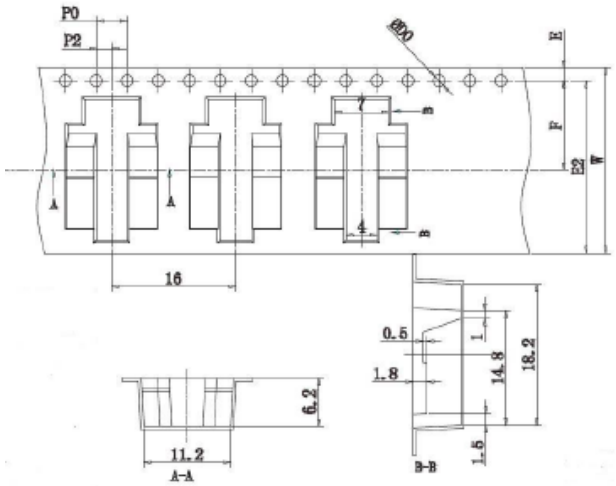

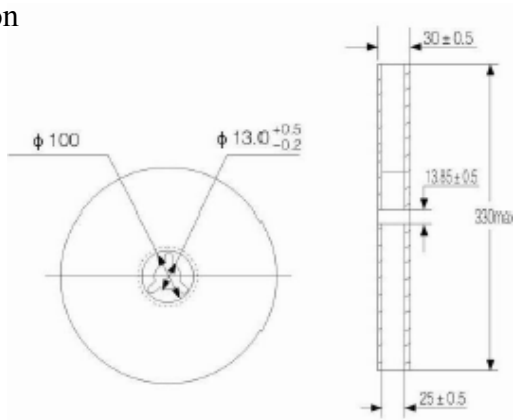

E	E2	F	P2	ØD0	P0	W
1.75±0.10	22.25 MIN.	11.5±0.10	2.00±0.10	1.50±0.10	4.00±0.10	24.00±0.30

Dimensions: mm

ATTENTION: Abracon LLC's products are COTS – Commercial-Off-The-Shelf products; suitable for Commercial, Industrial and, where designated, Automotive Applications. Abracon's products are not specifically designed for Military, Aviation, Aerospace, Life-dependant Medical applications or any application requiring high reliability where component failure could result in loss of life and/or property. For applications requiring high reliability and/or presenting an extreme operating environment, written consent and authorization from Abracon LLC is required. Please contact Abracon LLC for more information.

ABRACON LLC

5101 Hidden Creek Ln Spicewood TX 78669
Phone: 512-371-6159 | Fax: 512-351-8858
For terms and conditions of sales, please visit:
www.abracon.com

REVISED: 10.29.2018

ABRACON IS ISO9001-2015 CERTIFIED

ABRACON
POS Search Results

PtNo
AB-1.8432MHZ-B2
AB-1.8432MHZ-B7Y-I
AB-1.8432MHZ-D4Y
AB-1.8432MHZ-R650-D4Y
AB-10.000MHZ-B2
AB-11.0592MHZ
AB-11.0592MHZ-B2
AB-11.0592MHZ-D-T
AB-11.0592MHZ-T
AB-12.000MHZ-B2
AB-12.000MHZ-N2-T
AB-12.228MHZ-B2
AB-14.31818MHZ-B2
AB-14.7456MHZ-B2
AB-15.3600MHZ-22-D-T
AB-16.000MHZ
AB-16.000MHZ-10-B4Y-T
AB-16.000MHZ-B2
AB-16.000MHZ-SD
AB-17.734475-B4
AB-18.432MHZ-B2
AB-19.6608MHZ-22-D-T
AB-19.6608MHZ-B2
AB-2.000MHZ-B2
AB-2.000MHZ-D1G
AB-2.4576MHZ-32-R-300-D4Z-MJ
AB-20.000MHZ-B2
AB-22.1184MHZ
AB-22.1184MHZ-B2
AB-24.000MHZ-B2
AB-24.576MHZ-B2F
AB-25.000MHZ-B2F
AB-27.000MHZ-B2F
AB-3.579545MHZ-1
AB-3.579545MHZ-B2
AB-3.579545MHZ-B2-T
AB-3.6864MHZ-B2
AB-32.000MHZ-B2
AB-4.000MHZ
AB-4.000MHZ-27-D
AB-4.000MHZ-B2
AB-4.9152MHZ-B2
AB-48.000MHZ-B2
AB-5.000MHZ-B2
AB-5.5296MHZ-T
AB-50.000MHZ-B2
AB-6.000MHZ-B2
AB-6.144MHZ
AB-6.7458MHZ-20D

ABRACON
POS Search Results

AB-7.3728MHZ-B2
AB-763-8.000MHZ-T
AB-8.000MHZ-B2
AB-8.000MHZ-DI
AB-8.000MHZ-N2-T
AB-8.192MHZ-B2
AB-9.8304MHZ-B2